CALIFORNIA REGIONAL WATER QUALITY CONTROL BOARD
LAHONTAN REGION

BOARD ORDER NO. R6V-2011-0048
WDID NO. 6B140505002

WASTE DISCHARGE REQUIREMENTS

FOR THE
BUREAU OF LAND MANAGEMENT

AND THE

CMC METALS LTD, VANCOUVER, CANADA

Inyo County

The California Regional Water Quality Control Board, Lahontan Region (Water Board) finds:

1. Discharger

CMC Metals Ltd (CMC Metals) operating as 0877887 BC Ltd (a subsidiary of CMC Metals) plans to re-activate the existing Bishop Mill as an independent mill located approximately one mile west of State Highway 6 on Ruldoph Road in Inyo County. The project will process up to 96 tons per day of ore transported from various off-site mining locations. The ore will be processed through the existing gravity mill.

The project facilities are located on federal land administered by the Bureau of Land Management (BLM). For the purposes of this Board Order (Order), CMC Metals, as the Owner and Operator of the Bishop Mill, and the BLM as the Landowner, are collectively referred to as the "Discharger."

Naming the BLM as a Discharger in this Order is consistent with past determinations made by the Regional Water Boards and the State Water Resources Control Board (State Water Board). Hereinafter, the term "Discharger" is used to assign primary responsibility to CMC Metals and secondary responsibility to the BLM. If CMC Metals fails to meet the requirements of this Order, the BLM will become the primary responsible party for complying with the requirements of this Order. Compliance with requirements of this Order may include cleanup and abatement of the effects of any pollution, threatened pollution, or nuisance associated with waste discharges at the Facility.

2. Order History

This is a new Order.

3. Reason for Action

The Water Board is adopting new waste discharge requirements (WDRs) to impose requirements for the disposal of waste to land associated with the operation of the Bishop Mill. These requirements include monitoring and reporting as described in Monitoring and Reporting Program R6V-2011-0048, which is made part of this Order.

4. Location

The Bishop Mill is located approximately one mile west of State Highway 6 on Ruldoph Road in Inyo County within the SW¼ of Section 4, T6S, R33E, Mount Diablo Baseline and Meridian. Attachment A of this Order shows the Bishop Mill location.

5. Facility

For the purposes of this Order, the Bishop Mill is referred to as the "Facility". Attachment B of this Order shows the existing general site layout.

6. Existing Site Conditions/Land Use

Land in the vicinity of the Facility (five-mile radius) is predominantly open space and covered with native vegetation. Ranching is the primary land use in the area. Historic mining prospects and mines are located to the north-northwest of the site.

7. Description of Existing Facility Components

a. Main Mill Building (ore processing components are shown in Attachment C)

b. Warehouse

c. Garage

d. Existing Tailings Disposal Area
A surface impoundment used during prior operation of the Mill. As described in 7(e) below, the tailings and liner were removed. This area will be used to construct the new surface impoundment (Group A waste management unit [WMU]).

e. Concrete Ore Patio

Approximately 100 tons of tailings previously deposited in the existing tailings disposal area were excavated and temporarily placed on the Ore Patio (Attachment B). A 40-mil liner underlies and covers the temporary tailings stockpile on the ore patio. An earthen berm diverts stormwater run-on and contains stormwater run-off from the ore patio. CMC Metals will reprocess these tailings during re-commissioning of the mill.

f. Monitoring wells 1 though 4

g. Fuel Storage

An existing portable-stand mounted 500-gallon above ground fuel tank will be used to store diesel fuel for use in site equipment. The tank will be double-walled designed to the standards required by the Unified Program implemented by the Inyo County Environmental Health Services. Fuel will be received in bulk and lubricants will be received in steel drums or plastic. CMC Metals will prepare a Spill Prevention Control and Countermeasure Plan to be kept at the tank location. Propane is stored in a 1,000-gallon above ground tank.

h. Power

Electric power is supplied by Southern Edison via an existing above ground power line. The mill operates on 440 volt, three-phase power. Otherwise, the Facility will operate on 220- and 110-volt power.

i. Water Supply

Water for mill operations is supplied by the onsite production well, PW-3.

j. Sanitary and Solid Waste

No sanitary facilities will be located at the Facility. Instead, portable toilets will be used, approximately one for every five employees. Authorized personnel will remove wastes on an as-required basis and the wastes will be disposed of in an appropriate manner.

Reagent, solvents, waste oil, contaminated fuel and other similar residues resultant from Facility operations will be collected in proper containers and stored in a small roll-off bin or other trash bin. Handling and disposal of solid waste produced on site will be in accordance with all applicable regulations. Authorized personnel will remove wastes on an as-required basis and disposed of in an appropriate manner.

8. Description of Ore Process Steps

a. Sources of Ore

Sources of ore will be generally from the Gold Bug Mine, Radcliffe Mine and Darwin Mine in the Ballarat Mining District in south-central Inyo County and other areas within Inyo County.

b. Importation of Ore

Incoming ore of up to 100 tons per day will arrive in over-the-highway haul trucks and will be off-loaded at the existing concrete ore patio and/or the temporary ore stockpile area northwest of the ore patio.

c. Processing of Ore

The Facility will process raw ore using screening, grinding, flotation and gravity circuits within the main Mill building. The main components of the processing operations include: primary/secondary crushers, Krupp screen mill, ball mill, rake classifier, flotation cells, and a concentrate leaf/disk filter. Attachment C of this Order shows the flow diagram for the mill process circuit.

The raw ore will be loaded into the ore feed bin (25-ton capacity) by a front end loader, then gravity fed to the mill at the rate of approximately 4 tons per hour, or approximately 96 tons per 24-hour shift.

The ore will be crushed and milled to approximately minus 10 mesh. The material will then go through a jigging concentration process where the coarse concentrates are dried and bagged for off-site refining. The tailings from the jigging process will be mixed with water and metal collector chemicals (Xanthate 350 or an equivalent general collector, Aero 208 or an equivalent free gold collector, and Aero 31 or an equivalent sulfide collector) creating a chemically charged ore slurry that is 30 percent solids. Soda ash will also be added to maintain a near neutral pH.

The ore slurry will be transferred to flotation cells where Aero Froth or an equivalent flotation agent, is added to facilitate recovery of metallic particles. The flotation cells and frothing agent create an agitated air-infused froth bringing the metallic particles to the surface of the cells. Each cell in the system collects the frothed metallic particles and transports them to the concentrate thickener tank.

The concentrate containing the processing reagents and precious metals will be piped to the concentrate thickener tank and dewatered, which will allow

most of the additive chemicals to be re-circulated back into the processing system for re-use. The concentrate will be further dewatered at the leaf/disk filter. The concentrate filter material will be dried to reduce the moisture content to around 10 percent and then loaded in drums or flexible intermediate bulk container (FIBC) sacks for shipping off-site to a refinery.

The tailings from the flotation cells will be passed from the last flotation cell to the launderer tray where a surfactant (Shaklee's Basic H or an equivalent) will be added. The Basic H breaks down any remaining flotation reagents, allowing the heavy metal particles to sink and prepare the ore slurry for the Diester gravity recovery shaker table (shaker table). The shaker table will recover metallic particles that were too large or heavy to be recovered by the flotation process. The shaker table concentrates will be dewatered, filtered, and dried. The dried concentrate will than be shipped off-site for refining. The rejects from the shaker table are the solid tailings that will be piped to the WMU. The tailings piped to the WMU will be settled and dewatered and the water recirculated to the mill for reuse.

d. Dust Suppression

Any required air quality permits will be obtained for process components and land disturbance from the Great Basin Unified Air Pollution Control District. In general, dust control measures include application of water to roads and other disturbed areas, as necessary. Fugitive emissions in the process area will be controlled at the crusher and conveyor drop points using water sprays and /or negative air pressure dust collection, where necessary. Pollution control equipment will be installed, operated and maintained in good working order to minimize emissions.

9. Description of Ore

a. Ore Source Description

The Ballarat Mining District, which includes the Gold Bug and Radcliffe Mines, is underlain by schist, dolomatic limestone, and gnesis of Precambrian age, which in places have been cut by granitic dikes. The ore deposits consist of quartz veins containing free gold and occasionally abundant sulfide.

b. Ore Mineralogy

The Gold Bug mine consists of two distinct vein systems and mineralogies. The lower vein system contains vein quartz and consists of free gold in an iron-stained white quartz with calcite and trace copper carbonates, manganese oxides and barite. The upper vein system contains sulfide ore containing free gold and silver, lead, copper and iron sulfide.

Because mining at the Radcliffe mine has not advanced into the gold bearing vein, descriptions of the ore are not yet available. However, it is expected that the gold bearing veins will be similar to that described for the Gold Bug mine.

The Darwin ore is associated with a copper bearing skarn that hosts a high-grade copper-silver-zinc deposit. The primary sulfides are mostly argentiferous galena, sphalerite and pyrite with lesser amounts of pyrrhotite and chalcopyrite. Scheelite is also common.

c. Geochemical Characterization of Ore

A representative sample for each source and/or lithogic variant of ore hauled to the Facility will be collected prior to processing. The geochemical characteristics of the ore proposed for processing will be evaluated prior to transport to the Facility to ensure that the ore is compatible with the mill process.

10. Description of Wastes

The wastes produced by the Facility's milling process will consist of tailings and process solution. The WMU includes an over-liner seepage collection system (Finding 14) and floating sump pump that serves to de-water the tailings and return much of the process solution to the mill for re-use.

The mill tailings will be a fine-grained (silt and fine sand sized) inorganic material. Chemical analysis of mill tailings in 2007 indicated that concentrations of lead and copper exceeded their respective soluble threshold limit concentrations. Because the Facility will accept different types of ores, metals in addition to lead and copper, may be present at concentrations that pose a significant threat to water quality. These tailings may produce weak acids from the oxidation of remaining minerals including sulfides.

The process solution is composed of water (approximately 1000 gallons per ton of ore), metal collector reagents, flotation reagents, surfactants, and pH adjuster.

- general metal collector (Xanthate 350, or equivalent to chemical family sodium/potassium amyl xanthate): diluted at 0.5 lbs Xanthate 350 per gallon of water (approximately 6% solution by weight); fed at a rate of approximately 0.5 milliliters of solution (or 0.00006 lbs Xanthate 350) per ton of ore.

- free gold collector (Aero 208, or equivalent to chemical family phosphorodithioate salt): a free gold collector; diluted at 16 ounces Aero Float 208 per gallon of water (approximately 12.5% by volume); fed at a rate of approximately 1 milliliter solution per minute (approximately 60 milliliters Aero Float 208 per ton of ore).

- sulfide collector (Aero 31, or equivalent to chemical family aryl dithiophosphoric acid); diluted at 16 ounces Aero 31 per gallon of water (approximately 12.5% by volume); fed at a rate of approximately 0.75 milliliter solution per minute (approximately 40 milliliters Aero 31 per ton of ore)

- an alcohol-based frothing agent (Orfom F2 Frother or equivalent); fed at a rate of approximately 0.3 milliliter per minute (approximately 20 milliliters Aero Froth per ton of ore)

- Shaklee's Basic H: a surfactant; diluted to 2 ounces Shaklee's Basic H per gallon of water (approximately 1.5 % by volume); fed at a rate of approximately 0.5 gallons per hour.

- soda ash: pH adjuster; added as needed to maintain pH near 6.8.

Because the Facility will be operating as a custom mill, different ores will be processed. Depending on the ore type being processed, reagents, and pH adjustments will come into the circuit at different points. If other reagents not from the chemical families named above are desired for use, the Discharger will submit an material data safety sheet of the proposed product to the LRWQCB for acceptance by the Executive Officer.

11. Description of WMU

The slurry of ore tailings and process water that will be disposed in the WMU may contain metals and chemicals that pose a threat to water quality. To maintain operational flexibility as a custom mill, the WMU has been designed, sited, and will be constructed to Group A mining waste standards (sections 22480 and 22490, Title 27, California Code of Regulations [CCR]).The proposed WMU will be approximately 185 feet by 240 feet at its crest and approximately 25 feet deep with 2H:1V side slopes. Attachment D shows the proposed Facility layout and WMU.

The side slopes and base of the WMU will be constructed with locally-derived soil, and compacted to a minimum of 90 percent of the maximum dry density at ± 2 percent of optimum moisture content as determined by ASTM D1557, modified proctor testing.

The design configuration provides capacity for storage of approximately 550,000 cubic feet of tailings up to the required freeboard level of two feet below the side slope crest. The estimated total capacity of dry tailings is approximately 24,000 tons, assuming a dry density of 85 pounds per cubic foot. The anticipated operations life of the WMU is approximately 5 years.

The design includes a double liner system with a leachate collection and recovery system (LCRS).

12. Description of WMU Liner System

The Discharger may install a double liner containment system that follows either the prescriptive standard liner system for a Group A mining waste surface impoundment (sections 20320, 20330(a, d) and section 22490(f), Title 27, CCR) or an engineered alternative liner system.

The prescriptive standard consists of:

- An inner liner that can be clay or synthetic with a hydraulic conductivity of 1×10^{-7} centimeters/second (cm/sec) or less;
- A blanket-type leachate collection and recovery system installed between the inner and outer liner; and
- an outer clay liner that is a minimum of two feet thick with a hydraulic conductivity of 1×10^{-7} cm/sec or less and has a minimum relative compaction of 90 percent.

The Discharger has provided an engineered alternative liner system for the WMU pursuant to sections 20080 and 22470(a), Title 27, CCR. Section 20080(b), Title 27, CCR requires that alternatives shall only be approved where the Discharger demonstrates that: (1) the construction of the prescriptive standard is not feasible because it is unreasonably and unnecessarily burdensome and will cost substantially more than alternatives which meet the criteria, or is impractical and will not promote attainment of applicable performance standards; and (2) there is a specific engineered alternative that is consistent with the performance goal of the prescriptive standard and affords equivalent protection against water quality impairment.

From the top down, the engineered alternative liner system will consist of the following components.

1. 80-mil thick (where 1 mil equals 0.025 millimeters), smooth, high-density polyethylene (HDPE) geomembrane upper liner, and either:
2. geotextile fabric overlying a 60-mil lower HDPE Agru Super Gripnet Liner (which incorporates both drain media and liner), or
   a geonet overlying a 60-mil smooth HDPE lower liner;

3. 1-foot thick soil subliner compacted to a minimum relative compaction of 90 percent.

OR

1. 80-mil thick (where 1 mil equals 0.025 millimeters), smooth, high-density polyethylene (HDPE) geomembrane upper liner;
2. geonet;
3. 60-mil smooth HDPE lower liner;
4. 1-foot thick soil subliner compacted to a minimum relative compaction of 90 percent.

All liner seams will be wedge welded and tested for any leaks. The proposed HDPE membranes are commonly used as a long-lasting (>100 years) and impermeable ($<1x10^{-7}$ cm/sec) flexible barrier to prevent contamination of the soil and groundwater by the chemical separation solutions used in mining. The outer membrane combined with the 1-foot-thick subliner is consistent with the performance goal of the prescriptive standard and affords equivalent protection against water quality impairment.HDPE liner systems are chemically compatible with the low concentrations of collector and flotation chemicals, and surfactants used in the process solutions. HDPE liners are also chemically compatible with weak acidic solutions that may be generated by the oxidation of sulfide minerals remaining in the WMU.

13. Tailings Discharge

The tailings will be deposited as a slurry via direct discharge from the mill at a constant level of approximately three feet below the top of the WMU, embankment. Discharge locations will be varied to maximize areal distribution and depositional densities within the WMU. HDPE wear sheets (80-mil HDPE) will be used at all discharge locations to protect the primary liner. Wear sheets will be anchored at the pond crest by welding to the existing liner or constructing a second anchor trench outside the pond crest.

The discharge pipe from the Mill to the WMU will be constructed as pipe-in-pipe such that the outer leak detection pipe will gravity drain back into the WMU. Wear sheets will be inspected weekly and replaced as necessary to protect the primary WMU liner.

14. Overliner Seepage Collection System

An overliner seepage collection system consisting of a perforated pipe with overlying sand and gravel drain wrapped in geotextile will be installed over the primary liner to dewater the deposited tailings and maximize deposited tailings densities. The perforated pipe will drain into an overliner sump. Liquids collected in the sump will be pumped via submersible pump onto the surface of

the WMU to be evaporated or returned to the Mill for re-use as process water. A floating sump pump will return the water to the Mill via a pipe-in-pipe discharge line such that the outer leak detection pipe will gravity drain back into the WMU should the inner discharge pipe leak. Attachment E of this Order shows details for the overliner drain system layout.

15. Description of Leachate Collection and Recovery System (LCRS)

The Discharger may install a LCRS that follows the prescriptive standard for a Group A mining waste surface impoundment (section 22490(g) and sections 20340(b-e), Title 27, CCR).

The Discharger may also install an engineered alternative LCRS as provided in the ROWD should the engineered alternative liner system be installed. The upper liner will consist of an 80-mil HDPE flexible membrane liner. The drainage layer and lower liner will consist of either:

- geotextile fabric overlying a 60-mil HDPE Agru Super Gripnet geomembrane, or
- geonet overlying a 60-mil smooth HDPE flexible membrane liner.

The Agru Super Gripnet incorporates drain media into the liner so no other fluid transmission medium is needed. The Gripnet geomembrane or the geonet will drain to a 10-foot by 10-foot by 2-foot deep gravel-filled sump constructed between the upper and lower liners. A 6-inch diameter riser pipe extends from the sump to the top of the WMU berm. Attachment F of this Order shows details for the engineered alternative LCRS.

16. Description of Vadose Zone Monitoring System

Before the WMU receives any waste, two single suction cup lysimeters will be installed beneath the LCRS sump and at an appropriate background location to be determined. The background lysimeter will provide a base line against which the data collected from the LSCR sump lysimeter can be compared.

17. Description of the Groundwater Monitoring System

Groundwater quality will be monitored by using monitoring wells MW-1 through MW-4. MW-1, MW-2 and MW-4 are downgradient from the WMU, though depending on seasonal changes in groundwater flow direction, one or more of these wells may be cross gradient. MW-3 is an upgradient well. Attachment D

shows the existing wells locations. The groundwater monitoring program is further described in the Monitoring and Reporting Program R6V-2011-0048.

18. Stormwater Discharges

Run-on flow from the west will be diverted around the WMU to both the north and the south in a v-ditch diversion channel designed to accommodate the 100-year, 24-hour design storm. Attachment D shows the diversion channel. Stormwater run-on will be regulated under the requirements contained in the General Construction and Industrial Activities Stormwater Permits as set out in Section II.B of this Order (Requirements and Prohibitions, Stormwater Discharges).

Waste in discharges of storm water must be reduced or prevented to achieve the best practicable treatment level using controls, structures, and management practices.

19. Waste Classification

The waste discharged to the WMU is Group A mining waste as defined in section 22480(b)(1), Title 27, CCR.

20. Authorized Disposal Site

The only authorized disposal site for the processed ore tailings and waste process solutions is the Group A WMU.

21. Water Quality Protection Standards

A Water Quality Protection Standard (WQPS) is required for the Facility by this Order, and consists of constituents of concern (COC), concentration limits, monitoring points, and the Point of Compliance. The WQPS applies over the active life of the Facility, the closure and post-closure maintenance period, and the compliance period. The COC, concentration limits, monitoring points, and Point of Compliance are further described in Monitoring and Reporting Program R6V-2011-0048 and Section III of this Order.

22. Closure and Post-Closure Maintenance

a. Closure and Post-Closure Maintenance Plan

A Closure and Post-Closure Maintenance Plan is required in accordance with section 22510(b), Title 27, CCR. The discharger will submit a Final Closure and Post-Closure Maintenance Plan upon notification of closure, no

later than 180 days before beginning any final closure activities. If new methods are proven prior to development of the Final Closure and Post-Closure Maintenance Plan, the Discharger may revise the current proposal to incorporate such technologies.

b. Regrading, Revegetation, and Roads

Slopes will be regraded with mobile equipment (dozers, trucks, loaders, and scrapers) to blend with the natural surroundings topography to facilitate re-vegetation, where practicable.

c. WMU

The Discharger proposed that after approximately 5 years of operation, the WMU would be closed in-place as a landfill. Per section 21400(b)(1), Title 27, CCR, closures of this type requires a demonstration that it is infeasible to attempt clean-closure.

d. Miscellaneous Disturbed Areas

All process equipment will be removed upon final site closure. Permanent structures will be dismantled and removed or converted to another use compatible with the accepted closure. Foundations will be broken up and covered with clean fill to a minimum depth of one foot. All surplus materials and storage containers will be recycled or disposed offsite. Disturbed areas will be ripped with a dozer, or scarified with a grader, and seeded with native vegetation.

Once monitoring is no longer required, the monitoring wells and vadose zone monitoring points will be destroyed according to applicable regulations.

23. Financial Assurance

Prior to discharge of waste to the WMU, and annually thereafter, the Discharger is required to obtain and maintain Financial Assurance Instruments for:

a) closure activities and post-closure maintenance activities pursuant to sections 22510(f), 22207(b), and 22212(b), Title 27, CCR; and

b) initiating and completing corrective action for all known or reasonably foreseeable releases from the WMU during operation, closure, and post-closure maintenance periods.

24. Topography

The existing topography at the Facility is generally flat to moderately sloped to the east. Elevations range from 4,250 feet above mean sea level (MSL) along the western perimeter fence line to 4,325 at the existing concrete ore pad.

25. Climate

The climate is semi-arid. The average daily temperatures at the Bishop Airport station range from a high of 97.7 °F in July to a low of 21.8 °F in January.

Monthly precipitation is in the range of 0.12 (August) to 1.15 (January) inches (data from Bishop Airport, NOAA meteorological data station [period of record 1948-2009]) with an annual precipitation of 5.28 inches. Evaporation data are not recorded at the Bishop or Benton climate stations. The maximum expected 100-year, 24-hour storm precipitation is 4.0 inches.

26. Wind

Data recorded at the Bishop Airport show monthly average wind speeds ranging from 6.8 miles per hour in January to 10.4 mph in April. The prevailing wind direction in the area of the facility is primarily from the north, except in July and August when the winds are primarily from the south-southeast.

27. Site Geology

a. Setting

The facility is located in the southern part of the Chalfant Valley, which joins the Owens Valley approximately five miles north of Bishop. Chalfant Valley is a narrow alluvial plain bounded on the east by the White Mountains and on the west by the volcanic tableland which grades westerly into the Sierra Nevada Mountains.

The White Mountains are predominantly composed of granitic rocks partially overlain by metasedimentary and metavolcanic rocks. The volcanic tableland is comprised of pyroclastic deposits derived from volcanic explosions in the Long Valley caldera. The White Mountains extend to more than 13,000 feet above MSL, while the volcanic tableland rises to 6,000 feet above MSL.

The Chalfant Valley extends north from its junction with the Owens Valley to a geomorphic intersection with the Millner Creek alluvial fan, approximately 4.5 miles north of Chalfant.

b. Soils

The Facility soils are generally described as Yaney-Yaney loam and Cambidic-Haplodurids-Type Haplodurids associations. The Yaney-Yaney loam is a well-drained sand, sandy loam, and sandy loam with various amounts of gravel. The parent material is best described as volcanic ash and/or alluvium derived from mixed sources The Cambic soil is a well-drained gravelly to extremely gravelly sandy loam with some cementation at 11 to 18 inches below ground surface. The parent material is described as alluvium derived from mixed sources.

c. Faulting/Seismicity

The Facility is located within the Eastern California Shear Zone, a broad zone of strike-slip and normal faults distributed across the Owens Valley, Mohave Desert, and eastern Nevada, and northeastern California.

Several Holocene fault zones run through the valley, including the Fish Slough fault zone, approximately 2 miles west of the facility, and the White Mountain fault zone, approximately 2 miles east of the Facility. However, there are no Holocene faults mapped in the vicinity of the Facility and the Facility is not located within an identified Alquist-Priolo Fault zone. Six additional faults are mapped near the Facility with a distance from 5.6 miles to 50 miles from the Facility to the nearest reach of the fault.

The Discharger performed a stability analysis on the proposed WMU. Results of the static and seismic slope stability analyses indicate that the proposed WMU configuration is stable under both static and pseudostatic conditions.

28. Hydrology

a. Surface Water/Springs

There are no surface waters within a one-mile radius of the Facility. The nearest surface water (perennial) is Fish Slough, located approximately 2 miles to the west. The north fork of the man-made, earthen, and ephemeral McNally Canal crosses the southeastern corner of the Facility. The McNally Canal is located more than 1,000 feet south (cross-gradient) of the proposed WMU.

Seven unnamed springs are also located within a five-mile radius of the Facility.

b. Groundwater

The Facility is located in the Owens Valley groundwater basin. The groundwater flow at the Facility is due east with a groundwater gradient at approximately 0.013 feet/foot. Depth of groundwater typically ranges from approximately 35 to 48 feet below ground surface.

Groundwater recharge is primarily derived from snowmelt and precipitation runoff from the adjacent highlands, and from direct precipitation onto the valley floor. Groundwater generally occurs in unconsolidated to semi-consolidated alluvial deposits and flows towards the axis (north-south) of the valley.

Background water quality data for these monitoring wells is presented in Table 1 in the Monitoring and Reporting Program R6V-2011-0048.

29. Basin Plan

The Water Board adopted a Water Quality Control Plan for the Lahontan Basin (Basin Plan), which became effective on March 31, 1995.

30. Receiving Waters

The potential receiving waters are the ground waters of the Owens Valley Ground Water Basin, Department of Water Resources No. 6-12 and the surface waters of the Owens Hydrologic Unit, Upper Owens Hydrologic Area (McNally Canal).

31. Beneficial Uses

The beneficial uses of ground waters of the Owen's Valley Ground Water Basin, as set forth and defined in the Basin Plan, are:

a. Municipal and domestic supply;
b. Agricultural;
c. Industrial Service Supply;
d. Freshwater Replenishment;
e. Wildlife Habitat

The beneficial uses of surface water of the Upper Owens Hydrologic Area (McNally Canal) as set forth and defined in the Basin Plan, are:

a. Municipal and domestic supply;
b. Agricultural;
c. Groundwater Recharge;

d. Water Contact Recreation;
e. Non-contact Water Recreation;
f. Commercial and Sport Fishing;
g. Wildlife Habitat.

32. Water Quality Data Evaluation

Statistical and non-statistical procedures for evaluating detection monitoring data are required to meet section 20415(e)(7), Title 27, CCR and the report titled "Statistical Analysis of Groundwater Monitoring Data at RCRA Facilities" (USEPA, March 2009, EPA 530/R-09-007).

33. Other Considerations and Requirements for Discharge

Pursuant to California Water Code section 13241, the requirements of this Order take into consideration:

a. Past, present, and probable future beneficial uses of water:
This Order identifies past, present and probable future beneficial uses of water as described in Finding No. 31. The discharge will not adversely affect present or probable future beneficial uses of water, including municipal and domestic water supply, agricultural supply, industrial, and freshwater replenishment.

b. Environmental characteristics of the hydrographic unit under consideration, including the quality of water available thereto:
Finding Nos. 27 and 28 describes the environmental characteristics and quality of water from this hydrographic unit.

c. Water quality conditions that could reasonably be achieved through the coordinated control of all factors that affect water quality in the area:
The requirements of this Order will not result in groundwater degradation.

d. Economic considerations:
This Order authorizes the Discharger to implement closure and post-closure maintenance actions at the Facility as proposed by the Discharger. The Order accepts the Discharger's proposed actions as meeting the best practicable control method for protecting groundwater quality from impacts from the WMU.

e. The need for developing housing within the region:
The Discharger is not responsible for developing housing within the region. This Order provides WDRs for the Facility.

f. The need to develop and use recycled water:
There is currently no source of recycled water available to the Discharger; however, some of the process water will be pumped from the WMU and re-used, limiting the use of potable water at the Facility (see Finding 14).

34. California Environmental Quality Act

The Facility is subject to the provisions of the California Environmental Quality Act (CEQA) and its federal equivalent the National Environmental Policy Act (NEPA). The Water Board is the lead agency responsible for completing CEQA. Because the Facility is located on federal lands, the Bureau of Land Management (BLM) is the NEPA lead agency.

The Water Board provided a Notice of Intent to adopt a Mitigated Negative Declaration of Environmental Impact for the Bishop Mill (SCH No. 2011051005) project on May 3, 2011, for a minimum 30-day public review comment period. The Mitigated Negative Declaration is based on an Initial Study and reflects the Water Board's independent judgment and analysis. The Water Board received two public comments, but the comment letters did not identify any potentially significant impacts that were not already identified and mitigated for in the Initial Study. After considering the Initial Study and the comments received, the Water Board hereby determines there will be no significant adverse impacts to the environment with proper mitigation from the Facility and adopts a Mitigated Negative Declaration of Environmental Impact for the Facility. The documents or other material, which constitute the record, are located at the Lahontan Regional Water Quality Control Board office in South Lake Tahoe, California. The Regional Water Board will file a Notice of Determination within five days from the issuance of this order.

Subsequent to the determination filed by the Water Board, the BLM will conduct a separate environmental analysis of the proposed Bishop Mill project pursuant to the NEPA. The BLM will incorporate the findings of the Water Board into their NEPA analysis and any subsequent approval of CMC Metals' Plan of Operations for the Facility. Any BLM authorization to operate the Facility under an approved Plan of Operations will include stipulations to minimize surface disturbance and potential impacts to biological and cultural resources identified by the Water Board in the Initial Study. Any BLM authorization to operate the Facility will also stipulate what reclamation work will be required upon cessation of operations. BLM will also require CMC Metals to post an adequate financial assurance bond to cover the cost of the required reclamation work, including the removal of buildings, equipment, vehicles, personal property and any trash, debris, refuse or hazardous materials generated by the operation.

35. Notification of Interested Parties

The Water Board has notified the Discharger and all known interested agencies and persons of its intent to adopt new WDRs for the Facility.

36. Consideration of Interested Parties

The Water Board, in a public meeting on **July 13 and 14, 2011**, heard and considered all comments pertaining to the discharge of waste.

IT IS HEREBY ORDERED that the Discharger shall comply with the following:

I. DISCHARGE SPECIFICATIONS

A. Nondegradation

State Water Board Resolution No. 68-16 "Statement of Policy With Respect to Maintaining High Quality of Waters In California," known as the Nondegradation Policy, requires maintenance of existing high quality in surface waters, ground waters, or wetlands. Whenever the existing quality of water is better than the quality of water established in the Basin Plan, such existing quality shall be maintained unless appropriate findings are made under Resolution No. 68-16. The project as proposed must not degrade water quality.

B. Receiving Water Limitations

Receiving water limitations are narrative and numerical water quality objectives contained in the Water Quality Control Plan for the Lahontan Basin (Basin Plan) for all surface waters and groundwaters of the Lahontan Region. As such, they are required to be met.

Limitations for Surface Waters of the Upper Owens Hydrologic Area

The discharge of waste to surface waters shall not cause, or contribute to, a violation of the following water quality objectives for waters of the Upper Owens Hydrologic Area.

1. Ammonia

Ammonia concentrations shall not exceed the values listed in Tables 3-1 to 3-4 of the Basin Plan for the corresponding conditions in these tables. Tables 3-1 to 3-4 of the Basin Plan are incorporated into these requirements by reference.

2. Bacteria, Coliform

   i. Waters shall not contain concentrations of coliform organisms attributable to anthropogenic sources, including human and livestock wastes.

   ii. The fecal coliform concentration during any 30-day period shall not exceed a log mean of 20/100 milliliter (ml), nor shall more than 10 percent of all samples collected during any 30-day period exceed 40/100 ml. The log mean shall ideally be based on a minimum of not less than five samples collected as evenly spaced as practicable during any 30-day period. However, a log mean concentration exceeding 20/100 ml or one sample exceeding 40/100 ml, for any 30-day period shall indicate violation of this objective even if fewer than five samples were collected.

3. Biostimulatory Substances

   Waters shall not contain biostimulatory substances in concentrations that promote aquatic growths to the extent that such growths cause nuisance or adversely affect the water for beneficial uses.

4. Chemical Constituents

   i. Waters designated as MUN (a beneficial use of surface water of the Upper Owen's Hydrologic Area) shall not contain concentrations of chemical constituents in excess of the maximum contaminant level (MCL) or secondary MCL based upon drinking water standards specified in provisions of the California Code of Regulations, Title 22, Division 4, Chapter 15, hereby incorporated by reference into these requirements. This incorporation-by-reference is prospective including future changes to the incorporated provisions as the changes take effect.

   ii. Waters shall not contain concentrations of chemical constituents in amounts that adversely affect the water for beneficial uses.

5. Chlorine, Total Residual

   For the protection of aquatic life, total chlorine residual shall not exceed either a median value of 0.002 milligrams per liter (mg/L) or a maximum value of 0.003 mg/L. Median values shall be based on daily measurements taken within any six-month period.

6. Color

   Waters shall be free of coloration that causes nuisance or adversely affects the water for beneficial uses.

7. Dissolved Oxygen

   The dissolved oxygen concentration as percent saturation shall not be depressed by more than 10 percent, nor shall the minimum dissolved oxygen concentration be less than 80 percent of saturation.

8. Floating Materials

   i. Waters shall not contain floating material, including solids, liquids, foams, and scum, in concentrations that cause nuisance or adversely affect the water for beneficial uses.

   ii. The concentrations of floating material shall not be altered to the extent that such alterations are discernible at the 10 percent significance level.

9. Oil and Grease

   i. Waters shall not contain floating material, including solids, liquids, foams, and scum, in concentrations that cause nuisance or adversely affect the water for beneficial uses.

   ii. The concentration of oils, greases, or other film or coat generating substances shall not be altered.

10. pH

    The pH shall not be depressed below 6.5 nor raised above 8.5.

11. Radioactivity

    i. Radionuclides shall not be present in concentrations, which are deleterious to human, plant, animal, or aquatic life nor which result in the accumulation of radionuclides in the food web to an extent, which presents a hazard to human, plant, animal, or aquatic life.

    ii. Waters designated as MUN shall not contain concentrations of radionuclides in excess of the limits specified by the more restrictive of the California Code of Regulations Title 22 Division 4, Article 5, section 64441 et seq. This incorporation-by-reference is prospective including

future changes to the incorporated provisions as the changes take effect.

12. Sediment

The suspended sediment load and suspended sediment discharge rate of surface waters shall not be altered in such a manner as to cause nuisance or adversely affect the water for beneficial uses.

13. Settleable Materials

Waters shall not contain substances in concentrations that result in deposition of material that causes nuisance or that adversely affects the water for beneficial uses. The concentration of settleable materials shall not be raised by more than 0.1 milliliter per liter.

14. Suspended Materials

i. Waters shall not contain suspended materials in concentrations that cause nuisance or that adversely affect the water for beneficial uses.

ii. The concentration of total suspended materials shall not be altered to the extent that such alterations are discernible at the 10 percent significance level.

15. Taste and Odors

Waters shall not contain taste or odor-producing substances in concentrations that impart undesirable tastes or odors to fish or other edible products of aquatic origin, that cause nuisance, or that adversely affect the water for beneficial uses. The taste and odor shall not be altered.

16. Temperature

The natural receiving water temperature of all waters shall not be altered.

17. Toxicity

i. All waters shall be maintained free of toxic substances in concentrations that are toxic to, or that produce detrimental physiological responses in human, plant, animal, or aquatic life.

ii. The survival of aquatic life in surface waters subjected to a waste discharge, or other controllable water quality factors, shall not be less

than that for the same water body in areas unaffected by the waste discharge, or when necessary, for other control water that is consistent with the requirements for "experimental water" as defined in the most recent edition of *Standard Methods for the Examination of Water and Wastewater* (American Public Health Association, et al.).

18. Turbidity

Waters shall be free of changes in turbidity that cause nuisance or adversely affect the water for beneficial uses. Increases in turbidity shall not exceed natural levels by more than 10 percent.

Limitations for Groundwaters of the Owens Valley Groundwater Basin

The discharge of waste to groundwaters shall not cause, or contribute to, a violation of the following water quality objectives for waters of the Owens Valley Groundwater Basin.

20. Coliform Bacteria

In groundwaters, the median concentration of coliform organisms over any seven-day period must be less than 1.1/100 milliliters.

21. Chemical Constituents

i. Groundwaters must not contain concentrations of chemical constituent in excess of the maximum contaminant level (MCL) or secondary maximum contaminant level (SMCL) based upon drinking water standards specified in the provisions of Title 22, Division 4, Chapter 15 of the CCR.

ii. Waters must not contain concentration of chemical constituents in amounts that adversely affect the water for beneficial uses (i.e., agricultural purposes).

iii. Groundwaters must not contain concentrations of chemical constituents that adversely affect the water for beneficial uses.

22. Radioactivity

Groundwaters must not contain concentrations of radionuclides in excess of limits specified by the more restrictive of the CCR, Title 22, Division 4, Article 5, section 64441.

23. Taste and Odor

Groundwaters must not contain taste or odor-producing substances in concentrations that cause nuisance or that adversely affect beneficial uses. For groundwaters concentrations, at a minimum, must not exceed

adopted secondary maximum contaminant levels specified in Title 22, Division 4, Chapter 15 of the CCR.

C. Authorized Disposal Site

Only process solution, tailings, or any other material associated with milling operations can be discharged to the WMU.

D. Design and Construction

1. The WMU (as specified in Findings 11, 12, 14, and 15 and the Revised November 2010 ROWD) shall comply with the requirements contained in Chapter 7, Subchapter 1, Title 27, CCR for mining waste management.

2. The liners specified in Finding 11 shall have permeability no greater than 1 x 10^{-7} cm/sec and shall be chemically compatible with the waste discharged to the WMU.

3. The Discharger shall follow ASTM (American Society of Testing and Materials) standards, or their equivalent acceptable to the Executive Officer, for liner construction and quality control tests ("ASTM Standards and Other Specifications and Test Methods on the Quality Assurance of Landfill Liner Systems," 1994, ASTM, 1916 Race St., Philadelphia, PA), to verify liner integrity prior to discharge of any waste. Water Board staff may arrange for additional independent testing to verify liner integrity and seam sealing.

4. The one foot prepared soil subliner as required in the engineered alternative liner sytem (Finding 11) shall be smooth rolled to eliminate potential damage to the lower liner of the WMU and shall be compacted to a minimum of 90 percent of maximum dry density per ASTM D1557.

5. All facilities used in the milling process and for disposal of waste shall be adequately protected against washout, inundation, structural damage, or a significant reduction in efficiency resulting from a 100-year, 24-hour storm event.

6. The Discharger shall comply, at all times, with the engineering plans, specifications, and technical reports submitted with the complete ROWD and all requirements contained within these Orders.

II. REQUIREMENTS AND PROHIBITIONS

A. General

1. The discharge of any type of nonhazardous waste to the WMU, including garbage, paper, wood, scrap metal, abandoned equipment, and construction materials without prior approval by the Water Board is prohibited.

2. The Discharger shall not cause a release from the WMU, as indicated by the appropriate statistical or non-statistical data analysis and verification procedures of the Monitoring and Reporting Program.

3. If a release is detected that exceeds the trigger values of the concentration limits of the Monitoring and Reporting Program, the continued use of all or part of the WMU may be prohibited by the Water Board, until such time as the release is corrected and there is no longer a threat to water quality caused by the release.

4. The Discharger shall be prepared to correct any release from the WMU, including, but not limited to, shutting off all or part of any related processing facilities; rinsing and neutralizing the affected area; removing and properly containing tailings from the WMU; repairing and/or replacing all or part of a leaking liner; and any other corrective measures required to mitigate a potential threat to water quality caused by the release.

5. All chemical and petroleum product storage tanks on site will be constructed with secondary containment structures and/or features.

6. All hazardous material containers shall be properly secured in a storage facility that is not susceptible to the elements or accessible to the public.

B. Stormwater Discharges

Waste in discharges of storm water must be reduced or prevented to achieve the best practicable treatment level using controls, structures, and management practices. The Applicant shall file a Notice of Intent and comply with State Water Board's *Waste Discharge Requirements for Discharges of Storm Water Discharges Associated With Construction Activity, General Permit No. CAS00002* and *Waste Discharge Requirements For Discharges of Storm Water Associated With Industrial Activities, General Permit No. CAS00001* and all subsequent revisions and amendments.

These requirements do not preclude the Applicant from requirements imposed by municipalities, counties, drainage districts, and other local agencies regarding discharges of storm water to separate storm sewer systems or other water, conveyances and water bodies under their jurisdiction.

C. Detection Monitoring Program

The Discharger shall maintain a Detection Monitoring Program pursuant to section 20385(a)(1), Title 27, CCR.

D. Evaluation Monitoring Program

The Discharger shall establish an Evaluation Monitoring Program whenever there is evidence of a release from any portion of the Facility, including the Authorized Disposal Site, pursuant to sections 20420(k)(5) and 20425, Title 27, CCR.

E. Corrective Action Program

The Discharger shall institute a Corrective Action Program when required pursuant to section 20385(a)(4), Title 27, CCR.

III. WATER QUALITY MONITORING AND RESPONSE PROGRAMS

A. Water Quality Protection Standard

1. The Discharger shall propose to the Water Board any new constituents of concern proposed for discharge to the Facility at least 180 days before discharge. Before a new discharge commences, the Discharger shall estimate the concentrations for such constituents within the waste stream and submit written statistical method(s) in order to detect a release of such constituents.

2. At any given time, the concentration limit for each monitoring parameter for each constituent of concern shall be equal to the background value of that constituent.

3. If the Discharger or Executive Officer determines that concentration limits were or are exceeded, the Discharger must either immediately institute verification procedures upon such determination as specified below or submit and amended Report of Waste Discharge within 90 days of such determination in order to establish an evaluation monitoring program.

4. Monitoring wells MW-1, MW-2, and MW-4, or replacements, shall be used to define the Point of Compliance and monitor for a release from the Facility to ground water.

5. The lysimeter beneath the LCRS sump shall be used to monitor for a release from the WMU to the vadose zone.

B. Statistical Methods

1. The Discharger shall use statistical data analysis methods, acceptable to the Executive Officer, to evaluate detection monitoring data in order to determine statistically significant evidence of a release from the Facility.

2. The Discharger shall determine, within 45 days after completion of sampling, whether there is statistically significant evidence of a release from the Facility at each Monitoring Point. The analysis shall consider all monitoring parameters and constituents of concern. The Executive Officer may make an independent finding that there is statistically significant evidence of a release or physical evidence of a release.

3. If there is statistically significant evidence of a release, the Discharger shall immediately notify the Water Board by email and telephone. Subsequently, the Discharger may immediately initiate verification procedures, as specified in subsection II.D, below whenever there is a determination by the Discharger or Executive Officer that there is a statistically significant evidence of a release.

4. If the Discharger does not use verification procedures to evaluate evidence of a release, then there is an assumption that there is a statistically significant evidence of a release. The Discharger is required to submit within 90 days of deciding not to use verification procedures to evaluate evidence of a release an amended ROWD in order to establish evaluation monitoring or make a demonstration to the Water Board that there is a source other than the Facility that caused evidence of a release.

C. Non-statistical Methods

The Discharger shall determine whether there is physical evidence of a threatened impact to water quality from the WMU. Significant physical evidence may include unexplained volumetric changes in the Facility, unexplained stress in biologic communities, unexplained changes in soil characteristics, visible signs of leachate migration, concentration of constituents of concern in soil gas which may pose a threat to groundwater quality, or any other change to the environment that could reasonably be expected to be the result of a threatened

impact to groundwater quality from the WMU. If there is evidence of a release, the Discharger shall immediately notify the Water Board by email and telephone.

D. Verification Procedures

1. The Discharger shall immediately initiate verification procedures, as specified below, whenever there is a determination by the Discharger or Executive Officer that there is evidence of a release. If the Discharger declines the opportunity to conduct verification procedures, the Discharger shall submit a technical report as described in Section II(E) below (Technical Report Without Verification Procedures).

2. The verification procedure shall only be performed for the constituent(s) that has shown a statistically significant evidence of a release and shall be performed for those Monitoring Points at which a release is indicated.

3. If a determination is made that there is evidence of a release using the Prediction or Tolerance Interval Method, the Discharger may, within 30 days of such determination, update the Upper Tolerance Limit and reevaluate Point of Compliance data in order to verify evidence of a release from the facility. The Discharger must also collect three additional samples from the affected Monitoring Points and compare the results to the updated Upper Tolerance Limit.

4. The Discharger shall either conduct a composite retest using data from the initial sampling event with all data obtained from the resampling event or shall conduct a discrete retest in which only data obtained from the resampling event shall be analyzed to verify evidence of a release.

5. The Discharger shall submit to the Water Board the results of the verification procedure, as well as all concentration data collected for use in the retest, within seven days of the last laboratory analysis.

6. If the Discharger or Executive Officer verifiy evidence of a release, the Discharger is required to submit, within 90 days of such determination, a technical report pursuant to section 13267(b) of the California Water Code. The report shall propose an evaluation monitoring program or demonstrate to the Water Board that there is a source other than the Facility that caused evidence of a release.

E. Technical Report Without Verification Procedures

If the Discharger chooses not to initiate verification procedures after there has been a determination made for evidence of a release, a technical report shall be

submitted pursuant to section 13267(b) of the California Water Code. The report shall propose an evaluation monitoring program or attempt to demonstrate that the release did not originate from the Facility.

IV. PROVISIONS

A. Standard Provisions

The Discharger shall comply with the "Standard Provisions for Waste Discharge Requirements," dated September 1, 1994, as set out in Attachment G, which is made part of this Order.

B. Monitoring and Reporting

1. Pursuant to section 13267 of the California Water Code, the Discharger shall comply with and implement Monitoring and Reporting Program **No R6V-2011-0048.**

2. Pursuant to the Monitoring and Reporting Program, the Discharger shall maintain a Quality Assurance/Quality Control Plan (QA/QC Plan) for sampling and analysis.

3. Pursuant to section 20405, Title 27, CCR, the COC shall not exceed their respective concentration limits at each compliance monitoring point. The concentration limits will be proposed by the Discharger based on assessment of background conditions and must be acceptable to the Executive Officer prior to the discharge of any waste.

4. Compliance Period

   The compliance period is the number of years equal to the active life of the Unit plus the closure period. The estimated active life of the Facility is five years and the closure period is up to thirty years.

   a. Release

      Each time the concentration limits are exceeded (i.e., a release above the concentration limit is discovered), a Compliance Period for the affected WMU shall begin on the date the Executive Officer directs the Discharger to begin an Evaluation Monitoring Program.

   b. Automatic Extension

      The Discharger shall implement its Corrective Action Program in a timely manner. Pursuant to section 20410, Title 27, CCR, if the

Discharger's Corrective Action Program has not achieved compliance by the scheduled end of the Compliance Period, the Compliance Period shall be automatically extended until the affected WMU has been in continuous compliance for a least three consecutive years.

C. Closure and Post-Closure Maintenance Plan (Closure Plan)

1. The WMU at the Facility shall be closed pursuant to a Final Closure Plan prepared in accordance with all applicable requirements of Title 27 and Title 14, CCR, submitted to and approved by the Water Board.

   a. Closure Plan

      The Closure Plan submitted with the Report of Waste Discharge shall be updated/modified by the Discharger no later than 60 days prior to the discharge of waste to the WMU. The Closure Plan must be updated to meet the requirements of clean closure or to demonstrate, for acceptance by the Regional Board, that clean closure of the WMU is infeasible. Each Annual Report shall confirm that the Closure Plan conforms to the existing operations at that time.

   b. Final Closure Plan

      The Final Closure Plan shall be submitted at least 180 days prior to beginning any partial or final closure activities. The Final Closure Plan shall be prepared by or under the supervision of either a California Registered Civil Engineer or a Certified Engineering Geologist.

2. The Discharger shall provide and maintain adequate financial assurance for closure and post-closure maintenance per Finding 22 of this Order.

D. Closure of WMU

Closure and post-closure maintenance of the WMU at the Facility shall be in compliance with section 22510, Title 27, CCR.

E. Other Provisions

1. The Discharger shall have in place adequate emergency response plans in order to clean up any spill or release of any waste at the Facility.

2. The discharger must ensure that storm water discharges and non-storm water discharges do not cause or contribute to an exceedance of any applicable water quality standards.

V. TIME SCHEDULE

A. Final Proposed Construction Drawings, Specifications, and Descriptions

At least 60 days prior to beginning construction, the Discharger shall submit final proposed plans, specifications, and descriptions associated with the construction for review and acceptance by the Executive Officer. The submittals should include specifications and descriptions for all excavation, grading, liners, LCRS components, leak detection components, precipitation and drainage control facilities, and vadose zone monitoring points. The submittals should include a proposed schedule for the construction activities.

B. Preliminary Closure and Post Closure Maintenance Plan (Closure Plan)

No later than 30 days prior to discharging waste to the WMU the Closure Plan and cost estimates must be updated to meet the requirements of clean closure or to demonstrate, for acceptance by the Regional Board, that clean closure of the WMU is infeasible. The Closure Plan shall include an itemized and lump sum estimate of the costs of carrying out all actions necessary to close the Facility. The estimate shall include costs to prepare detailed design specifications, develop the Final Closure Plan, and perform the closure, reclamation and maintenance activities until closure is completed pursuant to section 20950, Title 27, CCR.

C. Known or Reasonably Foreseeable Release Plan (Release Plan)

No later than 60 days prior to discharging waste to the WMU, the Discharger must submit a Release Plan to this office for acceptance by the Executive Officer. Operations must not commence until the Executive Officer accepts the Release Plan. The Release Plan must include an itemized and lump sum cost estimate to implement the plan. The Release Plan and cost estimate to implement the plan must be prepared by, or under the supervision of, a California registered professional geologist or California registered professional engineer.

D. Financial Assurance Instruments

The Discharger must submit instruments of financial assurance acceptable to the Executive Officer, and adequate to cover the costs of closure, post-closure maintenance, and a reasonably foreseeable release from the WMU.

1. Separate Financial Assurance Instrument(s) providing adequate funding, secured by other means than corporate guarantees, for the Preliminary Closure and Post-Closure Maintenance lump sum estimate in V.B. of this Order must be submitted to the Water Board, pursuant to sections 22207

and 22222, respectively, Title 27, CCR no later than 60 days prior to discharge to the WMU.

2. Separate Financial Assurance Instrument(s) providing adequate funding, secured by other means than corporate guarantees, for the Known or Reasonably Foreseeable Release Plan lump sump estimate in V.C. of this Order must be submitted to the Water Board no later than 60 days prior to the discharge of waste to the WMU and operations must not commence until the Executive Officer accepts the Instrument.

3. Lump Sum Estimates shall be revised and submitted annually to the Water Board for approval by the Executive Officer as set out in V.B. and V.C. of this Order beginning on **August 15, 2012**. An increase may be necessary due to inflation, a change in regulatory requirements, a change in the approved closure plan, or other unforeseen events.

I, Harold J. Singer, Executive Officer, do hereby certify that the foregoing is a full, true, and correct copy of an Order adopted by the California Regional Water Quality Control Board, Lahontan Region, on July 13, 2011.

Harold J. Singer

HAROLD J. SINGER
EXECUTIVE OFFICER

Attachments:
A. Facility Location
B. Site Layout
C. Mill Process Flow Diagram
D. Proposed Facility Layout
E. Overliner Drain System Layout
F. Leachate Collection and Recovery System (LCRS) Design
G. Standard Provisions for Waste Discharge Requirements

Monitoring and Reporting Program No. R6V-2011-0048
MRP-1 Location of Monitoring Points
MRP-2 General Provisions for Monitoring and Reporting

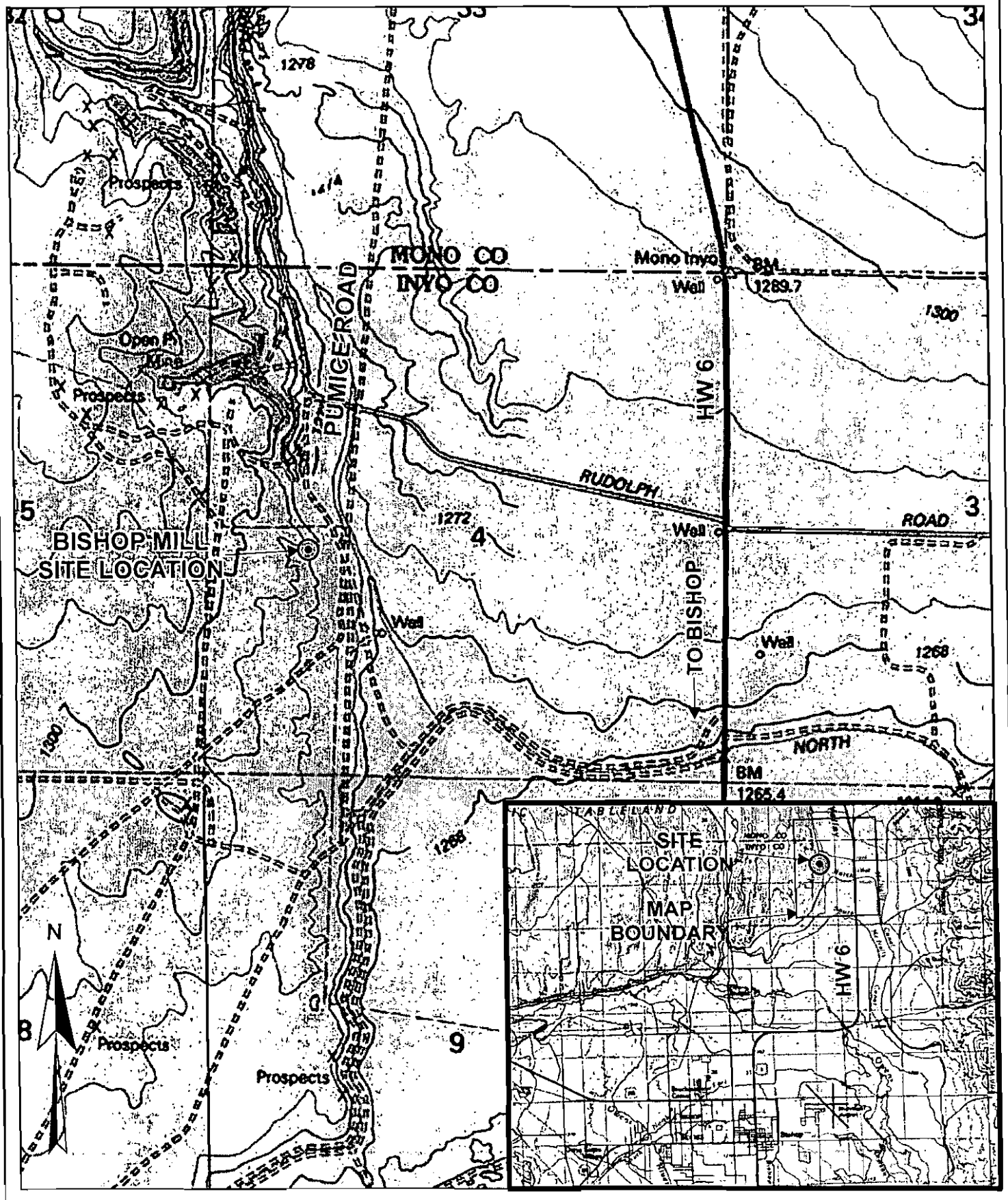

BISHOP MILL	FACILITY LOCATION	ATTACHMENT A

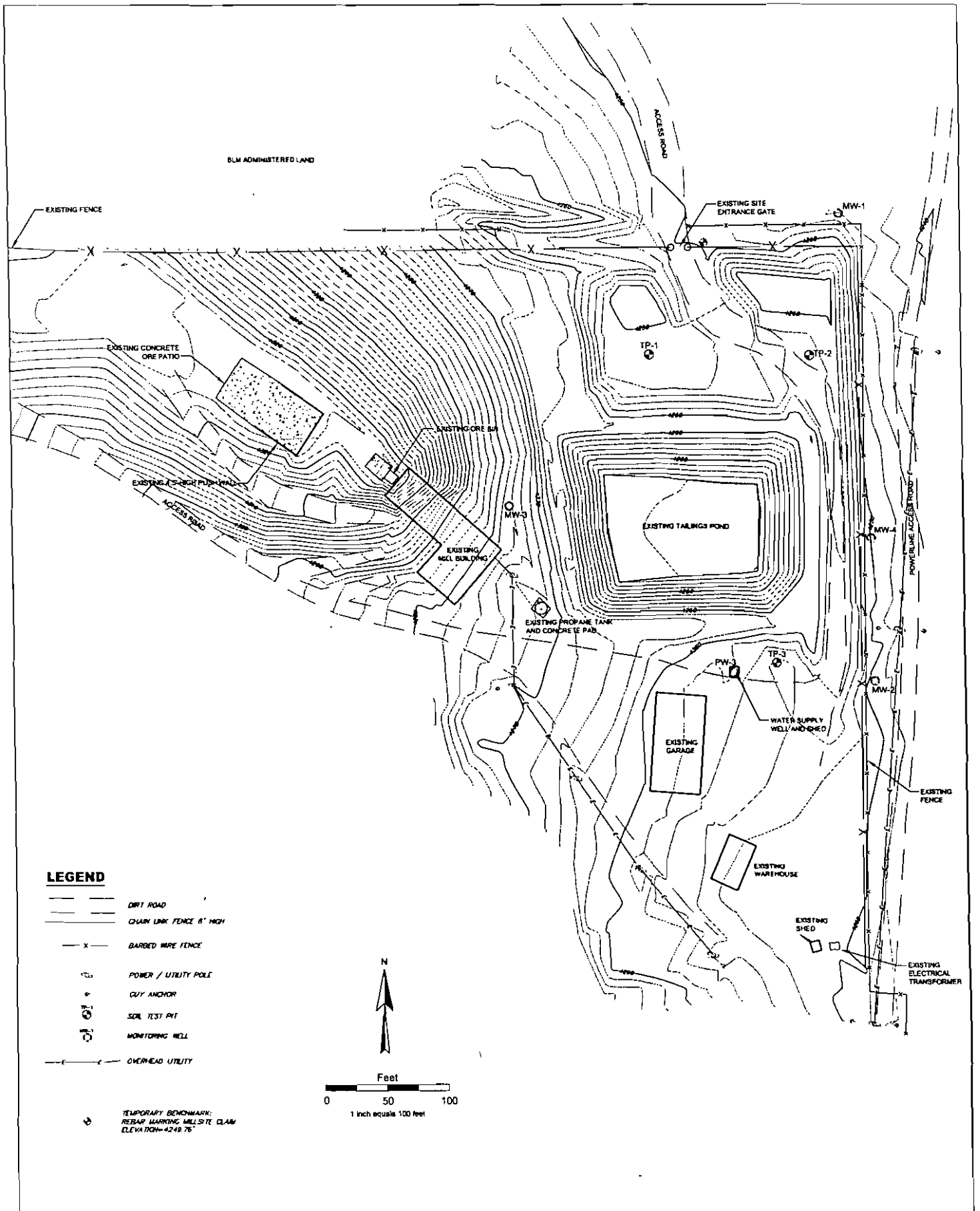

BISHOP MILL	SITE LAYOUT	ATTACHMENT B

H:\CMC Metals (Bishop Mill)\204600.010_Bishop_Mill_Waste_Discharge_Permit\040_Drafting\Fig_for_Tammy_ML_20101119\AttB_SiteLayout.dwg

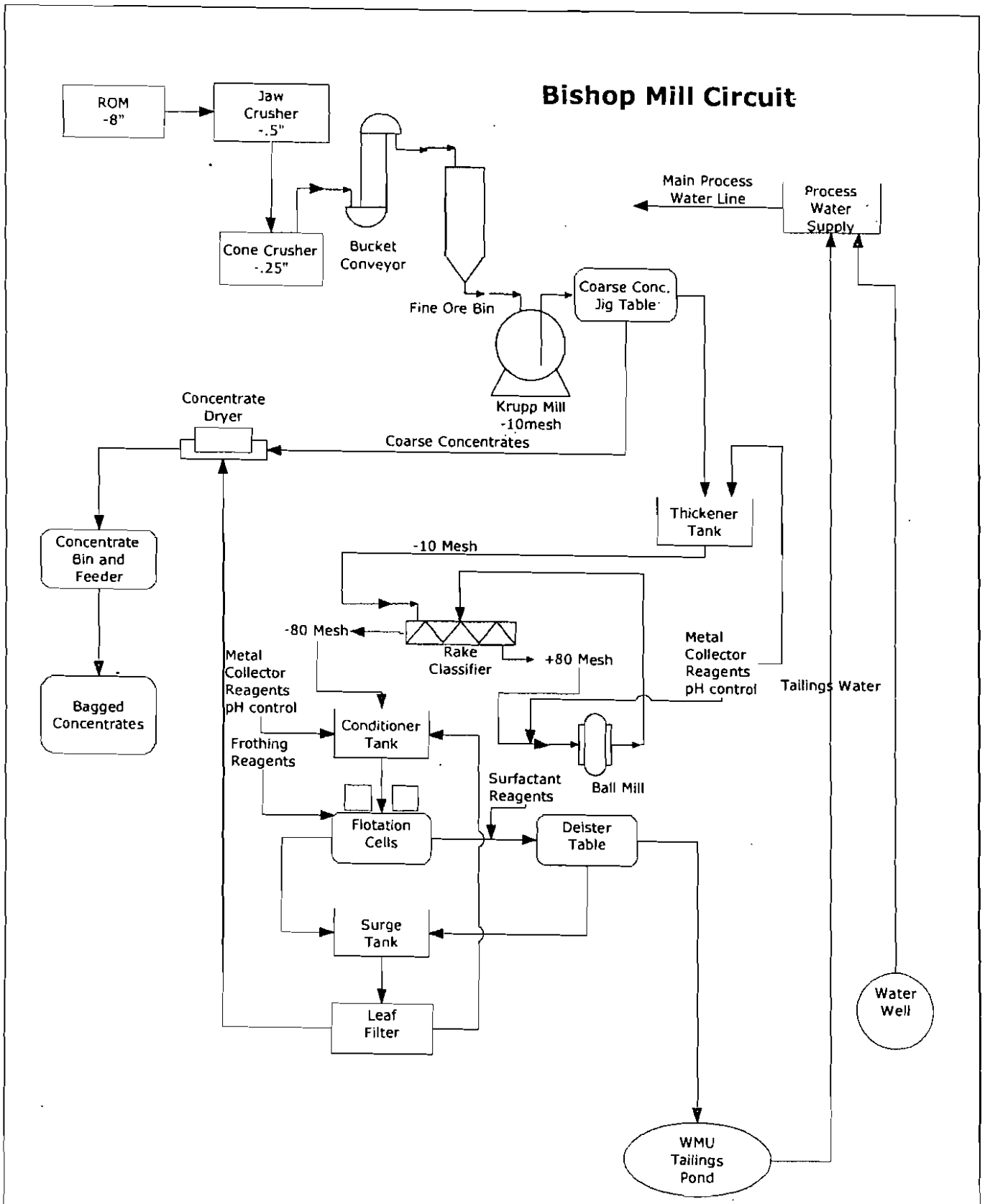

BISHOP MILL	MILL PROCESS FLOW DIAGRAM	ATTACHMENT C

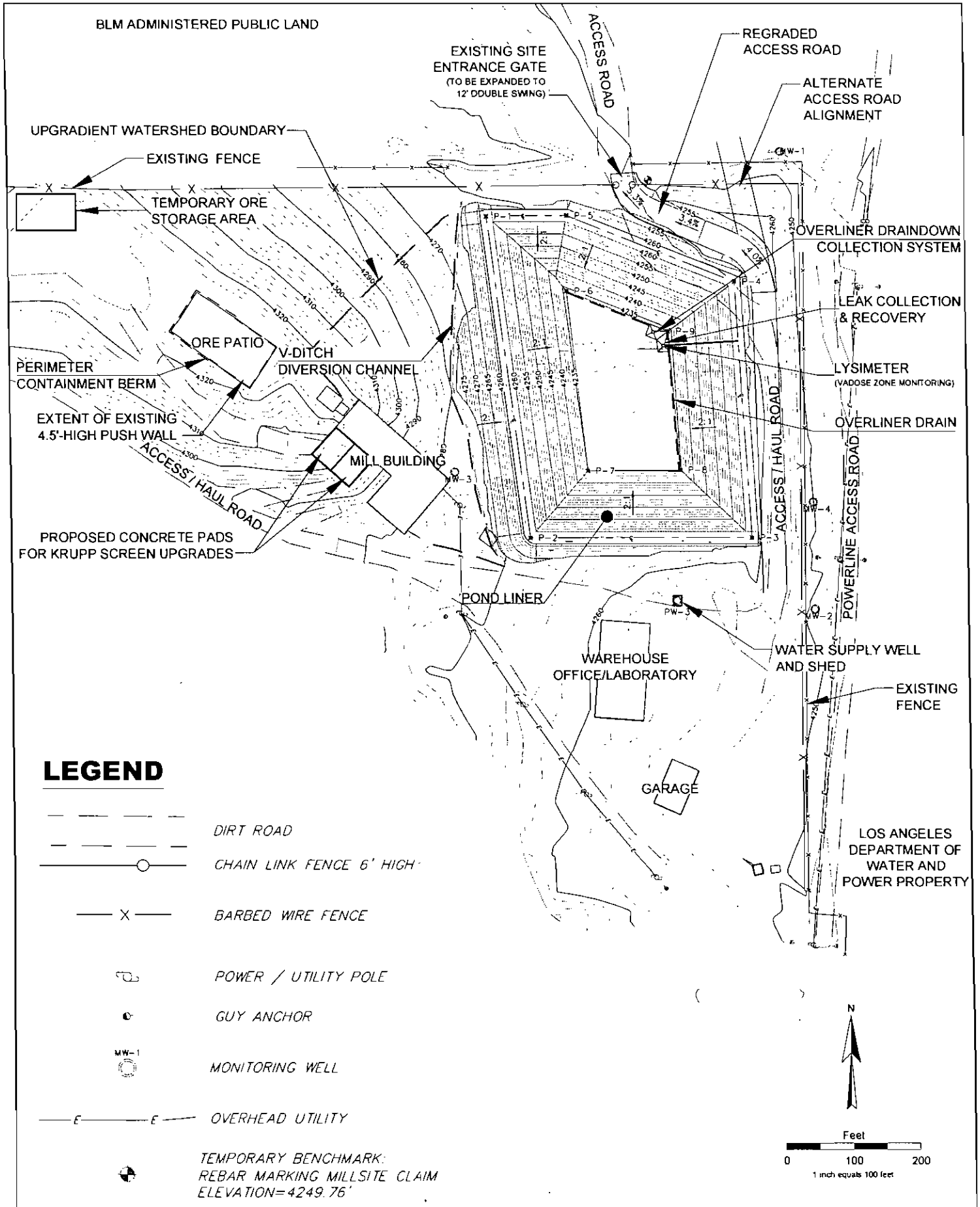

BISHOP MILL	PROPOSED FACILITIES	ATTACHMENT D

H:\CMC Metals (Bishop Mill)\204600.010_Bishop_Mill_Waste_Discharge_Permit\040_Drafting\WDR_Attd_PropFacils_JOG_20110513.dwg

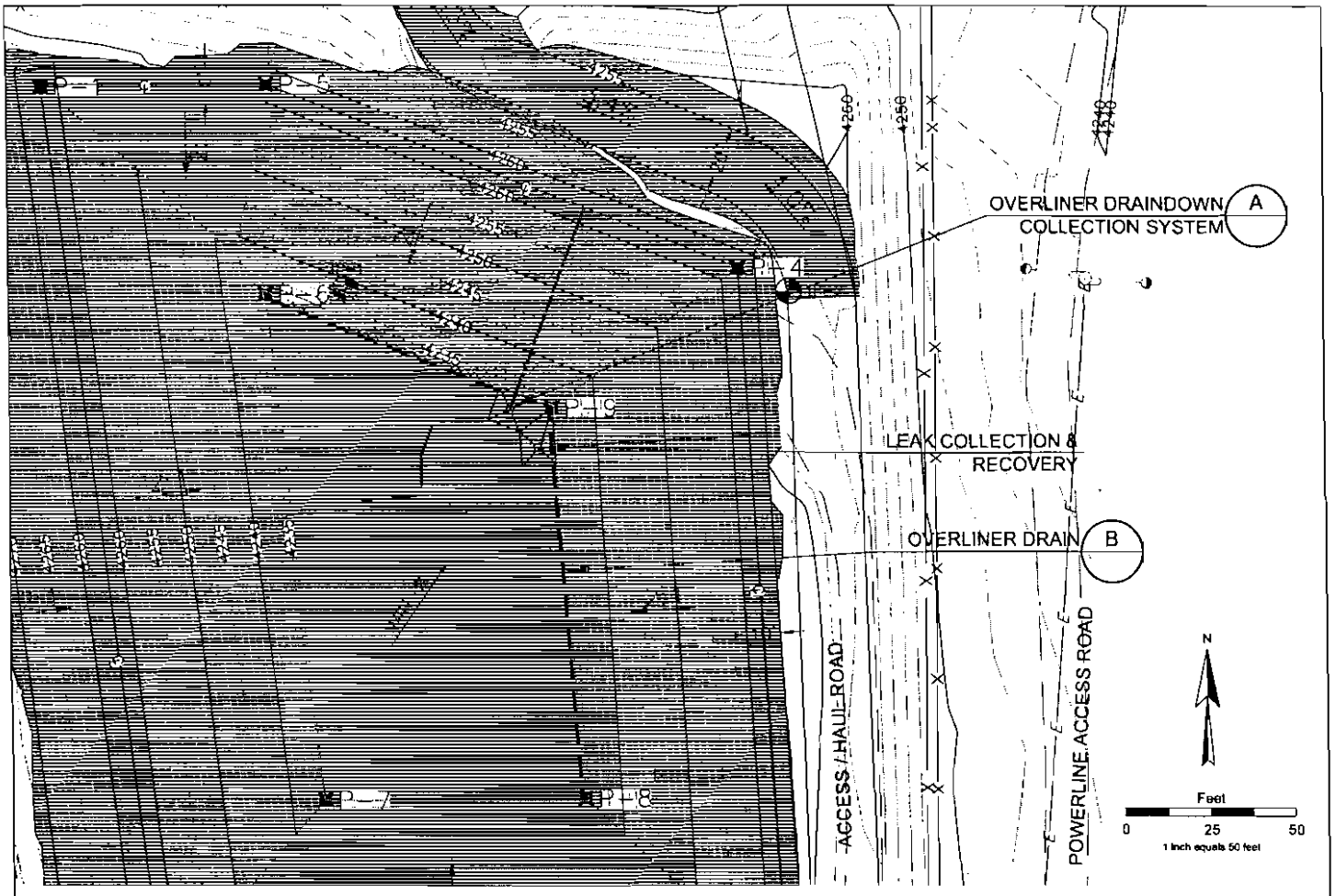

LEGEND

- DIRT ROAD
- CHAIN LINK FENCE 6' HIGH
- BARBED WIRE FENCE
- POWER / UTILITY POLE
- GUY ANCHOR
- SOIL TEST PIT
- MONITORING WELL
- OVERHEAD UTILITY

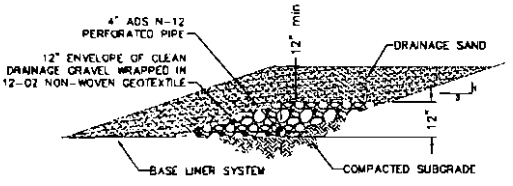

OVERLINER DRAIN DETAIL (B)
SCALE N.T.S.

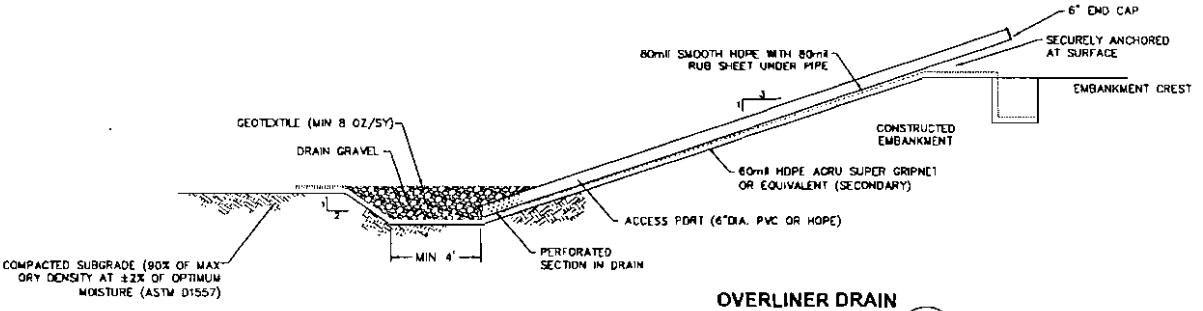

OVERLINER DRAIN COLLECTION SUMP (A)
SCALE N.T.S

BISHOP MILL	OVERLINER DRAIN SYSTEM LAYOUT	ATTACHMENT E

H:\CMC Metals (Bishop Mill)\204600.010_Bishop_Mill_Waste_Discharge_Permit\040_Drafting\Fig_for_Tammy_ML_20101119\AttD_OverlinerDrainSystemLayout.dwg

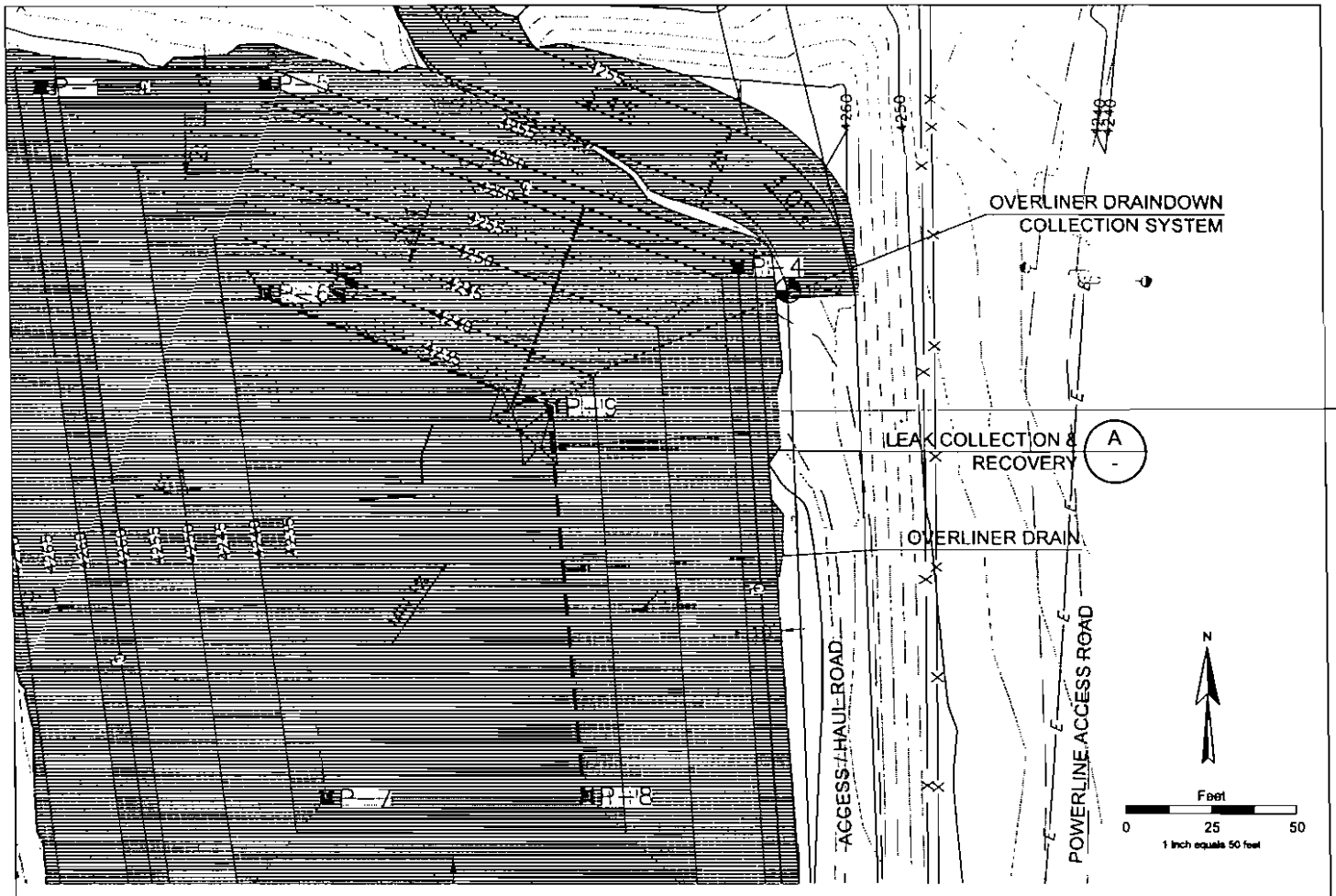

LEGEND

- DIRT ROAD
- CHAIN LINK FENCE 6' HIGH
- BARBED WIRE FENCE
- POWER / UTILITY POLE
- GUY ANCHOR
- SOIL TEST PIT
- MONITORING WELL
- OVERHEAD UTILITY

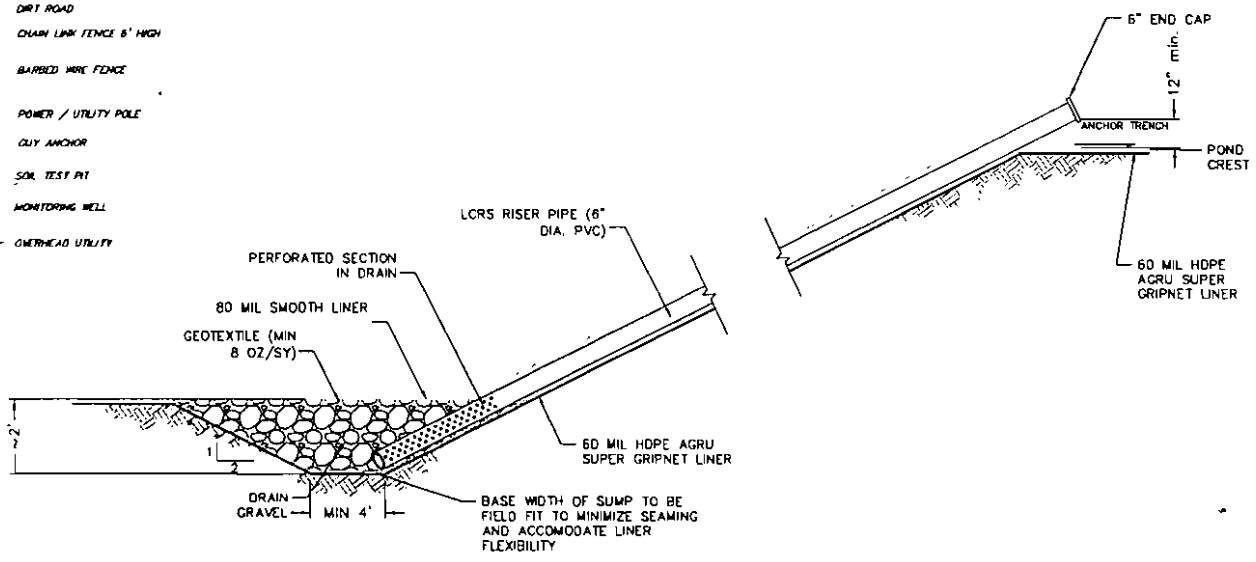

LEAK COLLECTION & RECOVERY SYSTEM (LCRS) A

SCALE: 1"=5'

BISHOP MILL	LCRS PIPING LAYOUT	ATTACHMENT F

H:\CMC Metals (Bishop Mill)\204600.010_Bishop_Mill_Waste_Discharge_Permit\040_Drafting\Fig_for_Tammy_ML_20101119\AttE_LCRSPipingLayout.dwg

ATTACHMENT G

CALIFORNIA REGIONAL WATER QUALITY CONTROL BOARD
LAHONTAN REGION

STANDARD PROVISIONS
FOR WASTE DISCHARGE REQUIREMENTS

1. Inspection and Entry

The discharger shall permit Regional Board staff:

a. to enter upon premises in which an effluent source is located or in which any required records are kept;

b. to copy any records relating to the discharge or relating to compliance with the waste discharge requirements;

c. to inspect monitoring equipment or records; and

d. to sample any discharge.

2. Reporting Requirements

a. Pursuant to California Water Code 13267(b), the discharger shall immediately notify the Regional Board by telephone whenever an adverse condition occurred as a result of this discharge; written confirmation shall follow within two weeks. An adverse condition includes, but is not limited to, spills of petroleum products or toxic chemicals, or damage to control facilities that could affect compliance.

b. Pursuant to California Water Code Section 13260 (c), any proposed material change in the character of the waste, manner or method of treatment or disposal, increase of discharge, or location of discharge, shall be reported to the Regional Board at least 120 days in advance of implementation of any such proposal. This shall include, but not be limited to, all significant soil disturbances.

c. The owner(s) of, and discharger upon, property subject to waste discharge requirements shall be considered to have a continuing responsibility for ensuring compliance with applicable waste discharge requirements in the operations or use of the owned property. Pursuant to California Water Code Section 13260(c), any change in the ownership and/or operation of property subject to the waste discharge requirements shall be reported to the Regional Board. Notification of applicable waste discharge requirements shall be furnished in writing to the new owners and/or operators and a copy of such notification shall be sent to the Regional Board.

d. If a discharger becomes aware that any information submitted to the Regional Board is incorrect, the discharger shall immediately notify the Regional Board, in writing, and correct that information.

e. Reports required by the waste discharge requirements, and other information requested by the Regional Board, must be signed by a duly authorized representative of the discharger. Under Section 13268 of the California Water Code, any person failing or refusing to furnish technical or monitoring reports, or falsifying any information provided therein, is guilty of a misdemeanor and may be liable civilly in an amount of up to one thousand dollars ($1000) for each day of violation.

f. If the discharger becomes aware that their waste discharge requirements are no longer needed (because the project will not be built or the discharge will cease) the discharger shall notify the Regional Board in writing and request that their waste discharge requirements be rescinded.

3. Right to Revise Waste Discharge Requirements

The Board reserves the privilege of changing all or any portion of the waste discharge requirements upon legal notice to and after opportunity to be heard is given to all concerned parties.

4. Duty to Comply

Failure to comply with the waste discharge requirements may constitute a violation of the California Water Code and is grounds for enforcement action or for permit termination, revocation and reissuance, or modification.

5. Duty to Mitigate

The discharger shall take all reasonable steps to minimize or prevent any discharge in violation of the waste discharge requirements which has a reasonable likelihood of adversely affecting human health or the environment.

6. Proper Operation and Maintenance

The discharger shall at all times properly operate and maintain all facilities and systems of treatment and control (and related appurtenances) that are installed or used by the discharger to achieve compliance with the waste discharge requirements. Proper operation and maintenance includes adequate laboratory control, where appropriate, and appropriate quality assurance procedures. This provision requires the operation of backup or auxiliary facilities or similar systems that are installed by the discharger, when necessary to achieve compliance with the conditions of the waste discharge requirements.

7. Waste Discharge Requirement Actions

The waste discharge requirements may be modified, revoked and reissued, or terminated for cause. The filing of a request by the discharger for waste discharge requirement modification, revocation and reissuance, termination, or a notification of planned changes

or anticipated noncompliance, does not stay any of the waste discharge requirements conditions.

8. Property Rights

The waste discharge requirements do not convey any property rights of any sort, or any exclusive privileges, nor does it authorize any injury to private property or any invasion of personal rights, nor any infringement of federal, state or local laws or regulations.

9. Enforcement

The California Water Code provides for civil liability and criminal penalties for violations or threatened violations of the waste discharge requirements including imposition of civil liability or referral to the Attorney General.

10. Availability

A copy of the waste discharge requirements shall kept and maintained by the discharger and be available at all times to operating personnel.

11. Severability

Provisions of the waste discharge requirements are severable. If any provision of the requirements is found invalid, the remainder of the requirements shall not be affected.

12. Public Access

General public access shall be effectively excluded from treatment and disposal facilities.

13. Transfers

Providing there is no material change in the operation of the facility, this Order may be transferred to a new owner or operation. The owner/operator must request the transfer in writing and receive written approval from the Regional Board Executive Officer.

14. Definitions

a. "Surface waters" as used in this Order, include, but are not limited to, live streams, either perennial or ephemeral, which flow in natural or artificial water courses and natural lakes and artificial impoundments of waters. "Surface waters" does not include artificial water courses or impoundments used exclusively for wastewater disposal.

b. "Ground waters" as used in this Order, include, but are not limited to, all subsurface waters being above atmospheric pressure and the capillary fringe of these waters.

15. Storm Protection

All facilities used for collection, transport, treatment, storage, or disposal of waste shall be adequately protected against overflow, washout, inundation, structural damage or a significant reduction in efficiency resulting from a storm or flood having a recurrence interval of once in 100 years.

CALIFORNIA REGIONAL WATER QUALITY CONTROL BOARD
LAHONTAN REGION

MONITORING AND REPORTING PROGRAM NO. R6V-2011-0048
WDID NO. 6B140505002

FOR THE
BUREAU OF LAND MANAGEMENT

AND THE
CMC METALS LTD, VANCOUVER, CANADA

Inyo County

I. WATER QUALITY PROTECTION STANDARD

A. Groundwater

1. Point of Compliance and Monitoring Points

The Point of Compliance, as defined in California Code of Regulations (CCR), Title 27, section 20405, is "a vertical surface located at the hydraulically downgradient limit of the waste management unit that extends through the uppermost aquifer underlying the unit." Four groundwater monitoring wells, and one water production well have been installed at the Facility and are part of the Detection Monitoring Program (DMP). The wells are located upgradient and crossgradient of the waste management unit (WMU), and at the Point of Compliance (POC). The locations of the groundwater monitoring wells are shown on attachment MRP-1, which is made a part of this Monitoring and Reporting Program. The following table summarizes the well construction

Summary of Existing Groundwater Monitoring Network

Identification	Location	Total Depth (feet below ground surface)	Screened Interval (feet below ground surface)
MW-1	Crossgradient / Downgradient / POC	50	40-50
MW-2	Crossgradient / Downgradient / POC	50	30-50
MW-3	Upgradient	88	58-88
MW-4	Downgradient / POC	53	23-53

2. Groundwater Monitoring Parameters and COC
The monitoring parameters and constituents of concern (COC) are summarized below.

Parameter	Units
Water Level	feet MSL
pH	standard pH Units
Electrical Conductivity	µmhos/cm

COC	Reporting Limit µg/L	COC	Reporting Limit µg/L
bicarbonate		Magnesium	500
alkalinity		Manganese	5
Aluminum	100	Mercury*	0.2
Antimony*	10	Molybdenum*	5
Arsenic*	5	Nickel*	5
Barium*	5	Nitrate (as N)	50
Beryllium*	2	Potassium	500
Boron	100	Selenium*	10
Cadmium*	5	Silver*	5
Calcium	500	Sodium	500
Chloride	200	Sulfate	500
Chromium*	5	TDS	10 mg/L
Cobalt*	5	Thallium*	10
Copper*	5	Weak Acid Dissociable(WAD) Cyanide	10
Fluoride	100	Vanadium*	5
Iron	100	Zinc*	20
Lead*	3		

Volatile Organic Compounds	USEPA Method 8260	Semi -Volatile Organic Compounds	USEPA Method 8270

3. Groundwater Concentration Limits
   Concentration limits for groundwater COC at the Facility are the background concentrations. The Discharger shall collect sufficient data to develop background water quality data for the monitoring parameters and COC in this Monitoring and Reporting Program. The concentration limit for each man-made constituent that is not proven to have originated from a source other than the Landfill is the laboratory detection limit for that constituent.

4. Background Water Quality Data

   See attached Table 1

B. Unsaturated Zone

1. WMU Monitoring Points
   The WMU is double lined with a leachate collection and recovery system drainage layer between the two liners. The LCRS drains to a collection sump. The sump, along with one lysimeter installed beneath the sump, and one lysimeter installed in an appropriate background plot (as approved by the Water Board), monitor for potential releases from the WMU. The LCRS and the lysimeter allow for the collection of liquid samples.

2. WMU Lysimeter Monitoring Parameters and COC
   The lysimeters shall be monitored for the presence of water. If water occurs, it shall be monitored and sampled for the COC described in Section I.A.2.

3. LCRS Sump Monitoring Parameters and COC
   The LCRS sump shall be monitored for the presence of water and, if detected, the flow of water to the sump shall be determined. Depending upon flow rates, additional monitoring may be required as described in section II.C below.

II. MONITORING

A. Operations Monitoring

The Discharger shall inspect the operation weekly for physical evidence of a threatened impact to water quality from the Facility. The inspections shall include observation of all drainage conveyances, waste management unit discharge and containment features, wear sheets, and other features constructed for water quality protection. If an adverse condition is discovered, the Discharger shall record the date of the inspection, problem discovered, and corrective measures taken. The Discharger shall submit to the Water Board the results of the inspection within seven days of the discovery.

The Discharger shall submit a Quarterly Report to the Water Board with a summary of the inspections performed and the following additional information:

- The quantity of ore (tons) placed on the ore pad during each of the previous three (3) months.
- The total quantity of ore (tons) on the ore pad at the beginning and end of the quarter.
- The quantity of ore (tons) processed through the mill during the quarter.
- The cumulative quantity of ore (tons) processed through the mill.
- The volume (tons) of tailings discharged to the waste management unit (WMU) during the quarter and in total.
- The freeboard (vertical distance from the lowest point of a berm to the water surface in a pond) of the as recorded on a weekly basis.

The Discharger shall maintain and retain written records onsite for a minimum of three (3) years. This period of retention shall be extended during the course of any unresolved litigation regarding a discharge or when requested by the Water Board.

B. Ore Monitoring

In the Quarterly Report, the Discharger shall report all laboratory analytical results for geochemical characterization of ore received at the mill during the quarter.

C. LCRS Monitoring

The LCRS sump installed in the WMU shall be monitored weekly and the findings submitted to the Water Board in the Quarterly Report.

If liquids are detected in LCRS sumps, the Discharger shall respond as set out in the Action/Response plans below:

ACTION/RESPONSE LEVELS – LCRS FOR WMU	
Flow	**Action/Response**
<0.3 gpm	No action required. Record weekly flow rate and submit recorded flow rates with the Quarterly Report.
>0.3 and <0.6 gpm	Notify the Water Board immediately. Record daily flow rate and watch for trends. Collect samples weekly for field screening of pH and electrical conductivity. Submit recorded flow rates and parameter data with the Quarterly Report.
>0.6 gpm	Notify the Water Board immediately. Collect samples for laboratory analysis of COC including VOCs and SVOCs. Implement liner inspection and repair plan.

D. Vadose Zone Monitoring

The lysimeters shall be monitored on a quarterly basis in accordance with manufacturer's instructions. If liquid is obtained from the lysimeters, a sample shall be submitted for the COC identified in section I.A.2 of this MRP.

E. Detection Monitoring Program

1. Groundwater

Wells MW-1, MW-2, and MW-4 are the monitoring points for detection monitoring at the point of compliance. Well MW-3 is an upgradient monitoring well that may be used to characterize background concentrations of naturally occurring COC. All four wells shall be sampled on a quarterly basis for the monitoring parameters and COC described in section I.A.2 of this MRP.

During each quarterly detection monitoring program event, groundwater levels shall be measured from monitoring wells MW-1 through MW-4 so the horizontal hydraulic groundwater gradient and the groundwater flow velocity can be calculated and reported in the Quarterly Report. Water quality sampling and analysis shall be completed in accordance with the Quality Assurance/Quality Control requirements of Title 27, section 20415.

Beginning with first quarter after the initiation of waste discharge, and every three years after, the Discharger shall collect samples from all wells for analysis of volatile organic compounds (USEPA Method 8260) and semi-volatile organic compounds (USEPA Method 8270).

The Discharger may propose, for Executive Officer approval, a shorter list of monitoring parameters or a decrease in monitoring frequency if the groundwater quality is sufficiently characterized.

2. Unsaturated Zone

The WMU unsaturated zone detection monitoring points consist of the lysimeters described in section I.B.2. of this MRP. The lysimeters shall be sampled on a quarterly basis and operated in accordance with the manufacturer's instructions. Due to the potential that only a small amount of liquid can be recovered, laboratory analysis shall be prioritized in the following order: dissolved metals, WAD cyanide, sulfate, TDS, alkalinity, bicarbonate, and the monitoring parameters.

III. REPORTING REQUIREMENTS

Pursuant to section 13267 of the California Water Code, the Discharger shall submit scheduled and unscheduled reports as set out below:

A. Scheduled Reports

1. Quarterly Reports

Beginning on **Janauary 30, 2012**, the Discharger shall submit Quarterly Reports for the previous quarterly monitoring period as show below.

Reporting Period	Due Date
January 1 to March 31	April 30
April 1 to June 30	July 30
July 1 to September 30	October 30
October 1 to December 31	January 30

The Quarterly Reports shall include the information required by monitoring requirements (Section II.A through II.E) and the following information:

- Results of groundwater laboratory analyses, including statistical limits for each ground water monitoring point, presented in a data table.
- Results of groundwater field monitoring parameters, including statistical limits for each monitoring point, presented in a data table.
- For each monitoring point, the report shall include the depth to groundwater in feet below ground surface and groundwater elevation in feet above mean sea level in data table(s). The report shall include a horizontal hydraulic groundwater gradient (ft/ft), and the direction and velocity (ft/day) of groundwater flow. A potentiometric map shall be included.
- A map or aerial photograph showing the locations of the groundwater and unsaturated zone monitoring points shall be included.
- The report shall include a discussion of any requirement violations found since the last report was submitted and shall describe actions taken or planned for correcting those violations. If the Discharged has previously submitted a detailed time schedule for correcting requirement violations, a reference to the correspondence will be satisfactory. If no violations have occurred since the last submittal, this shall be stated in the report.

The Discharger shall notify the Water Board before submitting the Quarterly Report if analytical data are missing, and shall make arrangements at that time for amendments and for updating the Quarterly Report.

2. Annual Reports

By **January 30th** of each year, the Discharger shall submit an Annual Report to the Water Board. The annual report can be combined with the fourth quarterly report also due on January 30th. The annual report shall include the following components.

- The compliance record and the corrective actions taken or planned which may be required to bring the discharge into full compliance with the discharge requirements.

- Monitoring data obtained for the previous year in both graphic and tabular form. Format for tabular data should be designed for ease of review. Specifically, the concentration limit for each COC should be listed immediately beside the measured concentration of that COC at each compliance monitoring point, so the values can be compared directly. Any COC that are over their concentration limit shall be bolded.

- Time series data plots of the last year of groundwater and soil moisture analyses.

- A report on the geochemical testing and ongoing monitoring of ore at the Facility. The report shall also include an indication of the testing and monitoring planned for the upcoming year.

- A review of the Preliminary Closure and Post-Closure Maintenance Plan to confirm that it conforms to the existing operations and that the amount of financial assurance remains adequate.

B. Unscheduled Reports

1. Spill Reports

The Discharger shall report by telephone any seepage, spill, leak, or other breach of the containment system of the WMU immediately after it is discovered. A written report shall be filed with the Water Board within seven (7) days.

If visual inspection and/or laboratory results indicate that the breach of the containment system is or may be a threat to water quality, it will be considered a possible release. In this case, the Monitoring and Reporting

Program may need to be adjusted to include long-term monitoring at the affected point to ensure that repairs and cleanup have been effective.

2. Notice of Possible (Unconfirmed) Releases

If a release is tentatively indicated, the Discharger shall immediately notify the Water Board by email and telephone. The Discharger shall conduct resampling and analysis, as discussed in Section III, Water Quality Monitoring and Response Programs, of the Order to which this MRP is attached. to confirm (or refute) the tentative release.

3. Report of Confirmed Release

If an actual release occurs, or if a tentative release is confirmed, the Discharger shall submit a Report of Release within 90 days of such a confirmation. This report should describe the release, which monitoring points are affected, and how the release was discovered and confirmed. The report shall propose an evaluation monitoring program meeting the requirements in section 20425, Title 27, CCR, or demonstrate to the Water Board that there is a source other than the WMU that caused evidence of a release.

4. Unscheduled Background Update Report

If a release is confirmed by any means other than comparison to the background monitoring, then the Discharger shall, within 30 days, sample for all COCs at all monitoring points, and submit for laboratory analysis. The Discharger shall submit an Unscheduled Background Update Report providing the results within 90 days of the date that all COCs were sampled at all monitoring points.

5. Preliminary Engineering Feasibility Study (PEFS) Report: Corrective Action

The Discharger shall, within 180 days of discovering (or confirming) a release, submit a PEFS Report meeting the requirements in section 20430, Title 27, CCR.

C. Violation

If monitoring data indicate violation of waste discharge requirements, the Discharger shall provide in the Quarterly Report information indicating the cause of violations and action taken or planned to bring the discharge into compliance.

D. General Provisions

The Discharger shall comply with the "General Provisions for Monitoring and Reporting" dated September 1, 1994, set out in Attachment MRP-2, which is made part of this Monitoring and Reporting Program.

IV. MONITORING RECORDS

Records of all monitoring information and copies of all reports required by this Order shall be retained until the WDR is rescinded for the Facility.

These records shall include:

- Site inspection and visual observation records of the WMU.
- Flow measurements, analyses or estimates of discharge into WMU.
- Analytical techniques or methods used and the results of analyses of the raw ore and tailings.
- Raw data sheets and quality assurance/quality control results.
- All calibration and maintenance records of instruments used.
- Date, place, and time of inspections, sampling, visual observations, analyses and/or measurements.
- Name(s) of the individual(s) who performed the inspections, sampling, visual observations, analyses and/or measurements.

V. TIME SCHEDULES FOR SAMPLING PROGRAMS

By **September 30, 2011**, the Discharger shall submit a detailed Sampling and Analysis Program (SAP), for acceptance by the Executive Officer, for the Facility. The SAP shall include a Field Sampling Plan and a Quality Assurance Project Plan.

Ordered by: Harold J. Singer
HAROLD J. SINGER
EXECUTIVE OFFICER

Dated: July 13, 2011

Attachments: Table 1 Water Quality
MRP-1 Monitoring Locations
MRP-2 General Provisions for Monitoring and Reporting

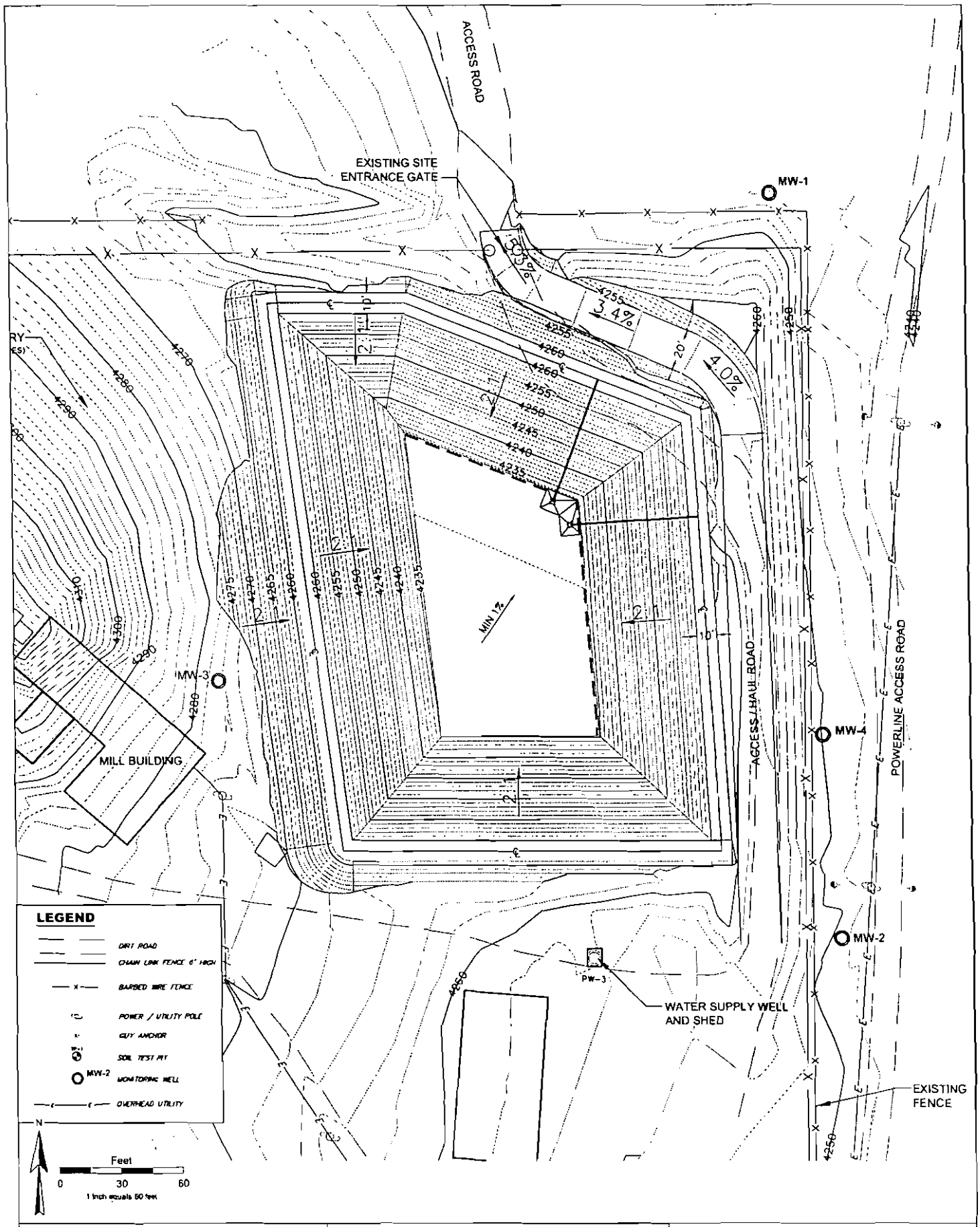

BISHOP MILL	MONITORING LOCATIONS	ATTACHMENT MRP-1

H:\CMC Metals (Bishop Mill)\204600.010_Bishop_Mill_Waste_Discharge_Permit\040_Drafting\Fig_for_Tammy_ML_20101119\AttMRP-1_MonitoringLocations.dwg

ATTACHMENT MRP-2

CALIFORNIA REGIONAL WATER QUALITY CONTROL BOARD
LAHONTAN REGION

GENERAL PROVISIONS
FOR MONITORING AND REPORTING

1. SAMPLING AND ANALYSIS

a. All analyses shall be performed in accordance with the current edition(s) of the following documents:

i. Standard Methods for the Examination of Water and Wastewater
ii. Methods for Chemical Analysis of Water and Wastes, EPA

b. All analyses shall be performed in a laboratory certified to perform such analyses by the California State Department of Health Services or a laboratory approved by the Water Board Executive Officer. Specific methods of analysis must be identified on each laboratory report.

c. Any modifications to the above methods to eliminate known interferences shall be reported with the sample results. The methods used shall also be reported. If methods other than EPA-approved methods or Standard Methods are used, the exact methodology must be submitted for review and must be approved by the Water Board prior to use.

d. The Discharger shall establish chain-of-custody procedures to insure that specific individuals are responsible for sample integrity from commencement of sample collection through delivery to an approved laboratory. Sample collection, storage, and analysis shall be conducted in accordance with an approved Sampling and Analysis Plan (SAP). The most recent version of the approved SAP shall be kept at the facility.

e. The Discharger shall calibrate and perform maintenance procedures on all monitoring instruments and equipment to ensure accuracy of measurements, or shall insure that both activities will be conducted. The calibration of any wastewater flow measuring device shall be recorded and maintained in the permanent log book described in 2.b, below.

f. A grab sample is defined as an individual sample collected in fewer than 15 minutes.

g. A composite sample is defined as a combination of no fewer than eight individual samples obtained over the specified sampling period at equal intervals. The volume of each individual sample shall be proportional to the discharge flow rate at the time of sampling. The sampling period shall equal the discharge period, or 24 hours, whichever period is shorter.

2. OPERATIONAL REQUIREMENTS

a. Sample Results

Pursuant to California Water Code Section 13267(b), the Discharger shall maintain all sampling and analytical results including: strip charts; date, exact place, and time of sampling; date analyses were performed; sample collector's name; analyst's name; analytical techniques used; and results of all analyses. Such records shall be retained for a minimum of three years. This period of retention shall be extended during the course of any unresolved litigation regarding this discharge, or when requested by the Water Board.

b. Operational Log

Pursuant to California Water Code Section 13267(b), an operation and maintenance log shall be maintained at the facility. All monitoring and reporting data shall be recorded in a permanent log book.

3. REPORTING

a. For every item where the requirements are not met, the discharger shall submit a statement of the actions undertaken or proposed which will bring the discharge into full compliance with requirements at the earliest time, and shall submit a timetable for correction.

b. Pursuant to California Water Code Section 13267(b), all sampling and analytical results shall be made available to the Regional Board upon request. Results shall be retained for a minimum of three years. This period of retention shall be extended during the course of any unresolved litigation regarding this discharge, or when requested by the Water Board.

c. The discharger shall provide a brief summary of any operational problems and maintenance activities to the Water Board with each monitoring report. Any modifications or additions to, or any major maintenance conducted on, or any major problems occurring to the wastewater conveyance system, treatment facilities, or disposal facilities shall be included in this summary.

d. Monitoring reports shall be signed by:

i. In the case of a corporation, by a principal executive officer at least of the level of vice-president or his duly authorized representative, if such representative is responsible for the overall operation of the facility from which the discharge originates;

ii. In the case of a partnership, by a general partner;

iii. In the case of a sole proprietorship,by the proprietor; or

iv. In the case of a municipal, state or other public facility, by either a principal executive officer, ranking elected official, or other duly authorized employee.

e. Monitoring reports are to include the following:

i. Name and telephone number of individual who can answer questions about the report.

ii. The Monitoring and Reporting Program Number.

iii. WDID Number.

f. Modifications

This Monitoring and Reporting Program may be modified at the discretion of the Water Board Executive Officer.

4. NONCOMPLIANCE

Under Section 13268 of the Water Code, any person failing or refusing to furnish technical or monitoring reports, or falsifying any information provided therein, is guilty of a misdemeanor and may be liable civilly in an amount of up to one thousand dollars ($1,000) for each day of violation.