CALIFORNIA REGIONAL WATER QUALITY CONTROL BOARD
CENTRAL VALLEY REGION

11020 Sun Center Drive, #200 Rancho Cordova, California 95670-6114
Phone (916) 464-3291 • Fax (916) 464-4645
http://www.waterboards.ca.gov/centralvalley

ORDER R5-2012-XXXX
NPDES NO. CA0079103

WASTE DISCHARGE REQUIREMENTS FOR THE CITY OF MODESTO WATER QUALITY CONTROL FACILITY STANISLAUS COUNTY

The following Discharger is subject to waste discharge requirements as set forth in this Order:

Table 1. Discharger Information

Discharger	City of Modesto
Name of Facility	City of Modesto Water Quality Control Facility
Facility Address	1221 Sutter Ave
	Modesto, CA 95351
	Stanislaus County
The U.S. Environmental Protection Agency (USEPA) and the Regional Water Quality Control Board have classified this discharge as a **major** discharge.	

The discharge by the City of Modesto from the discharge points identified below is subject to waste discharge requirements as set forth in this Order:

Table 2. Discharge Location

Discharge Point	Effluent Description	Discharge Point Latitude	Discharge Point Longitude	Receiving Water
001	Treated Municipal Wastewater	37º, 31’, 20” N	121º, 05’, 47” W	San Joaquin River

Table 3. Administrative Information

This Order was adopted by the Central Valley Quality Control Board on:	**<Adoption Date>**
This Order shall become effective on:	**<Effective Date>**
This Order shall expire on:	**<Expiration Date>**
The Discharger shall file a Report of Waste Discharge in accordance with title 23, California Code of Regulations, as application for issuance of new waste discharge requirements no later than:	**<180 days prior to the Order expiration date OR insert date>**

I, **PAMELA C. CREEDON**, Executive Officer, do hereby certify that this Order with all attachments is a full, true, and correct copy of an Order adopted by the California Regional Water Quality Control Board, Central Valley Region, on **<Adoption Date>**.

_____
PAMELA C. CREEDON, Executive Officer

Table of Contents

I. Facility Information 4
II. Findings 4
III. Discharge Prohibitions 11
IV. Effluent Limitations and Discharge Specifications 12
A. Effluent Limitations – Discharge Point No. 001 12
B. Land Discharge Specifications – Not Applicable 17
C. Reclamation Specifications – Not applicable 17
V. Receiving Water Limitations 17
A. Surface Water Limitations 17
B. Groundwater Limitations – Not Applicable 20
VI. Provisions 20
A. Standard Provisions 20
B. Monitoring and Reporting Program Requirements 24
C. Special Provisions 25
1. Reopener Provisions 25
2. Special Studies, Technical Reports and Additional Monitoring Requirements 26
3. Best Management Practices and Pollution Prevention 28
4. Construction, Operation and Maintenance Specifications 28
5. Special Provisions for Municipal Facilities (POTWs Only) 29
6. Other Special Provisions 31
7. Compliance Schedules 32
VII. Compliance Determination 35

List of Tables

Table 1. Discharger Information 1
Table 2. Discharge Location 1
Table 3. Administrative Information 1
Table 4. Facility Information 4
Table 5. Basin Plan Beneficial Uses 7
Table 6a. Effluent Limitations – Secondary Effluent 12
Table 6b. Effluent Limitations – Tertiary Effluent 14
Table 7a. Interim Secondary and Tertiary Effluent Limits for Electrical Conductivity 16
Table 7b. Interim Secondary Effluent Limits for Ammonia 17

List of Attachments

Attachment A – Definitions A-1
Attachment B – Map B-1
Attachment C – Flow Schematic C-1
Attachment D – Standard Provisions D-1
Attachment E – Monitoring and Reporting Program E-1
Attachment F – Fact Sheet F-1
Attachment G – Summary of Reasonable Potential Analysis G-1
Attachment H – Calculation of WQBELs H-1
Attachment I – Effluent and Receiving Water Characterization Study I-1

I. FACILITY INFORMATION

The following Discharger is subject to waste discharge requirements as set forth in this Order:

Table 4. Facility Information

Discharger	City of Modesto
Name of Facility	City of Modesto Water Quality Control Facility
Facility Address	1221 Sutter Ave
	Modesto, CA 95351
	Stanislaus
Facility Contact, Title, and Phone	Gary DeJesus, Deputy Director, Public Works (209) 577-6300
Mailing Address	SAME
Type of Facility	Publicly Owned Treatment Works
Facility Design Flow	70 million gallons per day (mgd) Secondary-level Treatment 2.3 mgd Advanced Treatment (expanding to 19.1 mgd)

II. FINDINGS

The California Regional Water Quality Control Board, Central Valley Region (hereinafter Central Valley Water Board), finds:

A. Background. The City of Modesto (hereinafter Discharger) was authorized to discharge pursuant to Order R5-2008-0059-01 and National Pollutant Discharge Elimination System (NPDES) Permit No. CA0079103. The Discharger submitted an early Report of Waste Discharge, dated 21 September 2010, requesting a NPDES permit renewal to continue discharging seasonally up to 70 mgd of disinfected secondary treated wastewater until the Discharger's Facility upgrades can be completed, at which time the seasonal secondary discharge will be ceased and the Discharger requests an eventual year-round discharge of up to 19.1 mgd of disinfected tertiary treated wastewater to be discharged from the City of Modesto Water Quality Control Facility (hereinafter Facility). The ROWD was submitted early, because the Discharger needs to significantly change the facilities to meet the discharge requirements in the previous Order and requested an increase in the permitted year-round tertiary treated discharge flow. <u>This Order allows for a 14.3 mgd increase in the year-round tertiary discharge to the San Joaquin River (an increase from 4.8 mgd to 19.1 mgd).</u>

For the purposes of this Order, references to the "discharger" or "permittee" in applicable federal and state laws, regulations, plans, or policy are held to be equivalent to references to the Discharger herein.

B. Facility Description. The Discharger owns and operates the Facility. The treatment system consists of separate primary and secondary treatment plants. The primary treatment plant, located at 1221 Sutter Avenue in the City of Modesto, provides pumping, screening, grit removal, flow measurement, primary clarification, and sludge digestion. The clarified effluent from the primary treatment plant is then transported approximately 6.5 miles southwest to the secondary treatment plant. At the secondary

treatment plant, located at 7007 Jennings Road in the City of Modesto, approximately half of the primary plant effluent is treated in fixed film reactors (FFR's). The remaining primary effluent is discharged to an aerated recirculation channel, where it is combined with the effluent from the FFR. Flow in the aerated recirculation channel is then distributed to three parallel facultative ponds for further treatment. Treated wastewater is transferred to one of two storage ponds until it can be discharged to the San Joaquin River, or applied to the Discharger's 2,526 acre ranch. The land discharge is regulated under a separate permit.

This Order allows discharge of seasonal secondary treated effluent while the Discharger is planning construction of additional tertiary treatment facilities. From 1 October through 31 May, disinfected secondary-level effluent may be discharged from Discharge Point 001 (see table on cover page) to the San Joaquin River (SJR), a water of the United States, within Hydrologic Unit 535/541. Prior to discharge to the SJR, the secondary-level treated effluent is disinfected with chlorine in a contact basin, and then dechlorinated with sulfur dioxide. The secondary treatment facility has a peak hydraulic treatment capacity of 70 mgd. Attachment B provides a map of the area around the Facility. Attachment C provides a flow schematic of the Facility.

This Order also allows year-round discharge of tertiary treated effluent. The tertiary facility is a two-step membrane bioreactor (MBR) process that includes an aerated activated sludge process and a membrane separation process. An oxidation ditch provides activated sludge biological treatment, reducing biochemical oxygen demand and providing nitrogen removal (i.e., nitrification/denitrification). Ultraviolet (UV) light radiation disinfects the filtered wastewater prior to storage or discharge. The current tertiary facility has a capacity of 2.3 mgd. The Discharger plans to construct a 3 phase project to increase the tertiary treated discharge to 19.1 mgd and cease the seasonal secondary discharge to surface water.

C. **Legal Authorities.** This Order is issued pursuant to section 402 of the Clean Water Act (CWA) and implementing regulations adopted by USEPA and chapter 5.5, division 7 of the California Water Code (CWC; commencing with section 13370). It shall serve as a NPDES permit for point source discharges from this facility to surface waters. This Order also serves as Waste Discharge Requirements (WDRs) pursuant to article 4, chapter 4, division 7 of the CWC (commencing with section 13260).

D. **Background and Rationale for Requirements.** The Central Valley Water Board developed the requirements in this Order based on information submitted as part of the application, through monitoring and reporting programs, and other available information. The Fact Sheet (Attachment F), which contains background information and rationale for Order requirements, is hereby incorporated into this Order and constitutes part of the Findings for this Order. Attachments A through J are also incorporated into this Order.

E. **California Environmental Quality Act (CEQA).** Under CWC section 13389, this action to adopt an NPDES permit is exempt from the provisions of CEQA, Public Resources Code sections 21100-21177.

The Discharger's proposed treatment for phases 2 and 3 is similar to the completed Phase 1A process. A two-step membrane bioreactor (MBR) process includes an aerated activated sludge process and a membrane separation process. The MBR process is designed and operated to provide biological nutrient removal that nitrifies and denitrifies the wastewater. Ultraviolet (UV) light radiation disinfects the filtered wastewater prior to storage or discharge. The City developed a mitigated negative declaration in September 2010 for the Phase 2 Facility upgrades.

F. **Technology-based Effluent Limitations.** Section 301(b) of the CWA and implementing USEPA permit regulations at section 122.44, title 40 of the Code of Federal Regulations (40 CFR 122.44), require that permits include conditions meeting applicable technology-based requirements at a minimum, and any more stringent effluent limitations necessary to meet applicable water quality standards. The discharge authorized by this Order must meet minimum federal technology-based requirements based on Secondary Treatment Standards at 40 CFR Part 133. A detailed discussion of the technology-based effluent limitations development is included in the Fact Sheet.

G. **Water Quality-based Effluent Limitations (WQBELs).** Section 301(b) of the CWA and 40 CFR 122.44(d) require that permits include limitations more stringent than applicable federal technology-based requirements where necessary to achieve applicable water quality standards. This Order contains requirements, expressed as technology equivalence requirements, which are necessary to achieve water quality standards. The Central Valley Water Board has considered the factors listed in CWC section 13241 in establishing these requirements. The rationale for these requirements, which consist of tertiary treatment or equivalent requirements, is discussed in the Fact Sheet.

40 CFR 122.44(d)(1)(i) mandates that permits include effluent limitations for all pollutants that are or may be discharged at levels that have the reasonable potential to cause or contribute to an exceedance of a water quality standard, including numeric and narrative objectives within a standard. Where reasonable potential has been established for a pollutant, but there is no numeric criterion or objective for the pollutant, WQBELs must be established using: (1) USEPA criteria guidance under CWA section 304(a), supplemented where necessary by other relevant information; (2) an indicator parameter for the pollutant of concern; or (3) a calculated numeric water quality criterion, such as a proposed state criterion or policy interpreting the state's narrative criterion, supplemented with other relevant information, as provided in 40 CFR 122.44(d)(1)(vi).

H. **Water Quality Control Plans.** The Central Valley Water Board adopted a *Water Quality Control Plan, Fourth Edition (Revised October 2011), for the Sacramento and San Joaquin River Basins* (hereinafter Basin Plan) ~~on~~ that designates beneficial uses, establishes water quality objectives, and contains implementation programs and policies to achieve those objectives for all waters addressed through the plan. In addition, the Basin Plan implements State Water Resources Control Board (State Water Board) Resolution No. 88-63, which established state policy that all waters, with certain exceptions, should be considered suitable or potentially suitable for municipal or

domestic supply. Beneficial uses applicable to the San Joaquin River, from the mouth of the Merced River to Vernalis, are as follows:

Table 5. Basin Plan Beneficial Uses

Discharge Point	Receiving Water Name	Beneficial Use(s)
001	**San Joaquin River, from the mouth of the Merced River to Vernalis**	Existing: Agricultural supply (AGR) including both irrigation and stock watering; industrial process supply (PRO); body contact recreation, canoeing and rafting, (REC-1); and, other non-body contact recreation (REC-2); warm freshwater aquatic habitat (WARM); migration of aquatic organisms (MIGR) both warm and cold habitats; warm habitat spawning, reproduction, and/or early development (SPWN); and, wildlife habitat (WILD). Potential: Municipal and domestic water supply (MUN).

The Basin Plan includes a list of Water Quality Limited Segments (WQLSs), which are defined as "…*those sections of lakes, streams, rivers or other fresh water bodies where water quality does not meet (or is not expected to meet) water quality standards even after the application of appropriate limitations for point sources (40 CFR 130, et seq.)." The Basin Plan also states, "Additional treatment beyond minimum federal standards will be imposed on dischargers to WQLSs. Dischargers will be assigned or allocated a maximum allowable load of critical pollutants so that water quality objectives can be met in the segment.*" Pollutants identified on the California 303(d) List as impairing the San Joaquin River include boron, selenium, electrical conductivity, chlorpyrifos, diazinon, DDT, Group A pesticides, mercury, and unknown toxicity. With the exception of mercury and unknown toxicity, agriculture is identified as the primary source of pollutants on the California 303(d) List impairing the San Joaquin River. Additionally, Table III-1 of the Basin Plan contains trace element water quality objectives for specific constituents and water bodies. Site-specific objectives for boron, selenium, and molybdenum are identified for the San Joaquin River, from the mouth of the Merced River to Vernalis.

I. **National Toxics Rule (NTR) and California Toxics Rule (CTR).** USEPA adopted the NTR on 22 December 1992, and later amended it on 4 May 1995 and 9 November 1999. About 40 criteria in the NTR applied in California. On 18 May 2000, USEPA adopted the CTR. The CTR promulgated new toxics criteria for California and, in addition, incorporated the previously adopted NTR criteria that were applicable in the state. The CTR was amended on 13 February 2001. These rules contain water quality criteria for priority pollutants.

J. **State Implementation Policy.** On 2 March 2000, the State Water Board adopted the *Policy for Implementation of Toxics Standards for Inland Surface Waters, Enclosed Bays, and Estuaries of California* (State Implementation Policy or SIP). The SIP became effective on 28 April 2000 with respect to the priority pollutant criteria promulgated for California by USEPA through the NTR and to the priority pollutant

objectives established by the Central Valley Water Board in the Basin Plan. The SIP became effective on 18 May 2000 with respect to the priority pollutant criteria promulgated by USEPA through the CTR. The State Water Board adopted amendments to the SIP on 24 February 2005 that became effective on 13 July 2005. The SIP establishes implementation provisions for priority pollutant criteria and objectives and provisions for chronic toxicity control. Requirements of this Order implement the SIP.

K. Compliance Schedules and Interim Requirements. In general, an NPDES permit must include final effluent limitations that are consistent with CWA section 301 and with 40 CFR 122.44(d). There are exceptions to this general rule. The State Water Board's *Policy for Compliance Schedules in National Pollutant Discharge Elimination System Permits* (Compliance Schedule Policy) allows compliance schedules for new, revised, or newly interpreted water quality objectives or criteria, or in accordance with a TMDL. All compliance schedules must be as short as possible, and may not exceed ten years from the effective date of the adoption, revision, or new interpretation of the applicable water quality objective or criterion, unless a TMDL allows a longer schedule. The Regional Water Board, however, is not required to include a compliance schedule, but may issue a Time Schedule Order pursuant to CWC section 13300 or a Cease and Desist Order pursuant to CWC section 13301 where it finds that the discharger is violating or threatening to violate the permit. The Central Valley Water Board will consider the merits of each case in determining whether it is appropriate to include a compliance schedule in a permit, and, consistent with the Compliance Schedule Policy, should consider feasibility of achieving compliance, and must impose a schedule that is as short as possible to achieve compliance with the effluent limit based on the objective or criteria.

The Compliance Schedule Policy and the SIP do not allow compliance schedules for priority pollutants beyond 18 May 2010, except for new or more stringent priority pollutant criteria adopted by USEPA after 17 December 2008.

Where a compliance schedule for a final effluent limitation exceeds one year, the Order must include interim numeric limitations for that constituent or parameter, interim milestones and compliance reporting within 14 days after each interim milestone. The permit may also include interim requirements to control the pollutant, such as pollutant minimization and source control measures. This Order does include compliance schedules and interim effluent limitations and/or discharge specifications. A detailed discussion of the basis for the compliance schedules and interim effluent limitations and/or discharge specifications is included in the Fact Sheet (Attachment F).

L. Alaska Rule. On 30 March 2000, USEPA revised its regulation that specifies when new and revised state and tribal water quality standards become effective for CWA purposes. (40 CFR 131.21 and 65 FR 24641 (27 April 2000).) Under the revised regulation (also known as the Alaska rule), new and revised standards submitted to USEPA after 30 May 2000, must be approved by USEPA before being used for CWA purposes. The final rule also provides that standards already in effect and submitted

to USEPA by 30 May 2000 may be used for CWA purposes, whether or not approved by USEPA.

M. Stringency of Requirements for Individual Pollutants. This Order contains both technology-based effluent limitations and WQBELs for individual pollutants. The technology-based effluent limitations consist of restrictions on BOD_5 and TSS. The WQBELs consist of restrictions on acute toxicity, chronic toxicity, aluminum, ammonia, carbon tetrachloride, copper, chlorodibromomethane, dichlorobromomethane, electrical conductivity, iron, manganese, mercury, molybdenum, pH, total coliform, and total residual chlorine. This Order's technology-based pollutant restrictions implement the minimum, applicable federal technology-based requirements.

WQBELs have been scientifically derived to implement water quality objectives that protect beneficial uses. Both the beneficial uses and the water quality objectives have been approved pursuant to federal law and are the applicable federal water quality standards. To the extent that toxic pollutant WQBELs were derived from the CTR, the CTR is the applicable standard pursuant to 40 CFR 131.38. The scientific procedures for calculating the individual WQBELs for priority pollutants are based on the CTR-SIP, which was approved by USEPA on 18 May 2000. All beneficial uses and water quality objectives contained in the Basin Plan were approved under state law and submitted to and approved by USEPA prior to 30 May 2000. Any water quality objectives and beneficial uses submitted to USEPA prior to 30 May 2000, but not approved by USEPA before that date, are nonetheless "*applicable water quality standards for purposes of the [Clean Water] Act*" pursuant to 40 CFR 131.21(c)(1). Collectively, this Order's restrictions on individual pollutants are no more stringent than required to implement the technology-based requirements of the CWA and the applicable water quality standards for purposes of the CWA.

This Order contains pollutant restrictions that are more stringent than applicable federal requirements and standards. Specifically, this Order includes effluent limitations for biochemical oxygen demand and total suspended solids that are more stringent than applicable federal standards, but that are nonetheless necessary to meet numeric objectives or protect beneficial uses. The rationale for including these limitations is explained in the Fact Sheet (Attachment F section IV.D.5). In addition, the Central Valley Water Board has considered the factors in CWC section 13241 in the Fact Sheet (Attachment F section IV.D.5).

N. Antidegradation Policy. 40 CFR 131.12 requires that the state water quality standards include an antidegradation policy consistent with the federal policy. The State Water Board established California's antidegradation policy in State Water Board Resolution No. 68-16. Resolution No. 68-16 incorporates the federal antidegradation policy where the federal policy applies under federal law. Resolution No. 68-16 requires that existing quality of waters be maintained unless degradation is justified based on specific findings. The Central Valley Water Board's Basin Plan implements, and incorporates by reference, both the state and federal antidegradation policies. As discussed in detail in the Fact Sheet, the permitted discharge is consistent with the antidegradation provision of 40 CFR 131.12 and Resolution No. 68-16.

O. Anti-Backsliding Requirements. Sections 303(d)(4) and 402(o)(2) of the CWA and federal regulations at 40 CFR 122.44(l) prohibit backsliding in NPDES permits. These anti-backsliding provisions require effluent limitations in a reissued permit to be as stringent as those in the previous permit, with some exceptions. Some effluent limitations in this Order are less stringent that those in Order No. R5-2008-0059-01. As discussed in detail in the Fact Sheet, this relaxation of effluent limitations is consistent with the anti-backsliding requirements of the CWA and federal regulations.

P. Endangered Species Act. This Order does not authorize any act that results in the taking of a threatened or endangered species or any act that is now prohibited, or becomes prohibited in the future, under either the California Endangered Species Act (Fish and Game Code sections 2050 to 2097) or the Federal Endangered Species Act (16 U.S.C.A. sections 1531 to 1544). This Order requires compliance with effluent limits, receiving water limits, and other requirements to protect the beneficial uses of waters of the state. The discharger is responsible for meeting all requirements of the applicable Endangered Species Act.

Q. Monitoring and Reporting. 40 CFR 122.48 requires that all NPDES permits specify requirements for recording and reporting monitoring results. CWC sections 13267 and 13383 authorize the Central Valley Water Board to require technical and monitoring reports. The Monitoring and Reporting Program establishes monitoring and reporting requirements to implement federal and State requirements. The Monitoring and Reporting Program is provided in Attachment E.

The technical and monitoring reports in this Order are required in accordance with CWC Section 13267, which states the following in subsection (b)(1), "*In conducting an investigation specified in subdivision (a), the regional board may require that any person who has discharged, discharges, or is suspected of having discharged or discharging, or who proposes to discharge waste within its region, or any citizen or domiciliary, or political agency or entity of this state who has discharged, discharges, or is suspected of having discharged or discharging, or who proposes to discharge, waste outside of its region that could affect the quality of waters within its region shall furnish, under penalty of perjury, technical or monitoring program reports which the regional board requires. The burden, including costs, of these reports shall bear a reasonable relationship to the need for the report and the benefits to be obtained from the reports. In requiring those reports, the regional board shall provide the person with a written explanation with regard to the need for the reports, and shall identify the evidence that supports requiring that person to provide the reports.*"

The Discharger owns and operates the Facility subject to this Order. The monitoring reports required by this Order are necessary to determine compliance with this Order. The need for the monitoring reports is discussed in the Fact Sheet.

R. Standard and Special Provisions. Standard Provisions, which apply to all NPDES permits in accordance with 40 CFR 122.41, and additional conditions applicable to specified categories of permits in accordance with 40 CFR 122.42, are provided in Attachment D. The discharger must comply with all standard provisions and with those additional conditions that are applicable under 40 CFR 122.42. The Central

Valley Water Board has also included in this Order special provisions applicable to the Discharger. Some special provisions require submittal of technical reports. All technical reports are required in accordance with CWC Section 13267. The rationale for the special provisions and need for technical reports required in this Order is provided in the Fact Sheet (Attachment F).

S. Provisions and Requirements Implementing State Law. – Not Applicable.

T. Notification of Interested Parties. The Central Valley Water Board has notified the Discharger and interested agencies and persons of its intent to prescribe WDRs for the discharge and has provided them with an opportunity to submit their written comments and recommendations. Details of notification are provided in the Fact Sheet of this Order (Attachment F).

U. Consideration of Public Comment. The Central Valley Water Board, in a public meeting, heard and considered all comments pertaining to the discharge. Details of the Public Hearing are provided in the Fact Sheet (Attachment F).

THEREFORE, IT IS HEREBY ORDERED, that Order No. R5-2008-0059-01 is rescinded upon the effective date of this Order except for enforcement purposes, and, in order to meet the provisions contained in division 7 of the CWC (commencing with section 13000) and regulations adopted thereunder, and the provisions of the federal CWA and regulations and guidelines adopted thereunder, the Discharger shall comply with the requirements in this Order.

III. DISCHARGE PROHIBITIONS

A. Discharge of wastewater at a location or in a manner different from that described in the Findings is prohibited.

B. The by-pass or overflow of wastes to surface waters is prohibited, except as allowed by Federal Standard Provisions I.G. and I.H. (Attachment D).

C. Neither the discharge nor its treatment shall create a nuisance as defined in section 13050 of the CWC.

D. The Discharger shall not allow pollutant-free wastewater to be discharged into the treatment or disposal, system in amounts that significantly diminish the system's capability to comply with this Order. Pollutant-free wastewater means rainfall, groundwater, cooling waters, and condensates that are essentially free of pollutants.

E. The discharge of disinfected secondary treated wastewater at Discharge Point 001 is prohibited except from 1 October to 31 May, and may only occur when River flows provide a flow ratio equal to or greater than 20:1 (river: effluent) as a Daily Average.

IV. EFFLUENT LIMITATIONS AND DISCHARGE SPECIFICATIONS

A. Effluent Limitations – Discharge Point No. 001

1. Final Effluent Limitations (Secondary Effluent 1 October – 31 May)

Effective immediately, unless otherwise specified, the Discharger shall maintain compliance with the following effluent limitations for the Secondary Treatment Plant at Discharge Point No. 001, with compliance measured at Monitoring Location EFF-001A (Secondary Effluent), as described in the Monitoring and Reporting Program (Attachment E):

a. The Discharger shall maintain compliance with the effluent limitations specified in Table 6a:

Table 6a. Effluent Limitations – Secondary Effluent

Parameter	Units	Effluent Limitations				
		Average Monthly	Average Weekly	Maximum Daily	Instantaneous Minimum	Instantaneous Maximum
Biochemical Oxygen Demand 5-day @ 20°C	mg/L	30	45	90	--	--
	lbs/day[1]	17,500	26,300	52,500	--	--
Total Suspended Solids	mg/L	45	60	105	--	--
	lbs/day[1]	26,300	35,000	61,300	--	--
pH	Standard Units	--	--	--	6.5	8.5
Aluminum (Total recoverable)	µg/L	457	--	750	--	--
Ammonia (as N)	mg/L	1.1	--	2.1	--	--
	lbs/day[1]	640	--	1,200	--	--
Carbon Tetrachloride	µg/L	4.1	--	13	--	--
Copper (Total recoverable)	µg/L	15	--	26	--	--
Dibromochloromethane	µg/L	5.4	--	15	--	--
Dichlorobromomethane	µg/L	9.0	--	13	--	--
Molybdenum (Total recoverable)	µg/L	--	--	23	--	--
Electrical Conductivity @ 25ºC (1 April – 31 May)	µmhos/cm	700	--	--	--	--
Electrical Conductivity @ 25ºC (1 October – 31 March)	µmhos/cm	1000	--	--	--	--

[1] Based on permitted flow of 70 mgd.

b. **Percent Removal:** The average monthly percent removal of BOD 5-day 20°C and total suspended solids shall not be less than 85 percent.

c. **Acute Whole Effluent Toxicity.** Survival of aquatic organisms in 96-hour bioassays of undiluted waste shall be no less than:

   i. 70%, minimum for any one bioassay; and
   ii. 90%, median for any three consecutive bioassays.

d. **Total Residual Chlorine.** Effluent total residual chlorine shall not exceed:

   i. 0.011 mg/L, as a 4-day average;
   ii. 0.019 mg/L, as a 1-hour average;

e. **Total Coliform Organisms.** Effluent total coliform organisms shall not exceed:

   i. 23 most probable number (MPN) per 100 mL, as a 7-day median; and
   ii. 240 MPN/100 mL, more than once in any 30-day period.

f. **Average Daily Discharge Flow.** The Average Daily Discharge Flow shall not exceed 70 mgd.

g. **Manganese, Total Recoverable.** For a calendar year, the annual average effluent concentration shall not exceed 50 µg/L.

h. **Iron, Total Recoverable.** For a calendar year, the annual average effluent concentration shall not exceed 300 µg/L.

i. **Aluminum, Total Recoverable.** For a calendar year, the annual average effluent concentration shall not exceed 200 µg/L.

j. **Mercury.** For a calendar year, the performance-based interim ~~The total~~ annual mass ~~discharge~~ load of total mercury shall not exceed 1.16 pounds/year.

k. **Chronic Whole Effluent Toxicity.** There shall be no chronic toxicity in the effluent discharge.

l. **Chlorpyrifos and Diazinon.** Effluent chlorpyrifos and diazinon concentrations shall not exceed the sum of one as defined below:

   i. Average Monthly Effluent Limit

$$S_{AMEL} = \frac{C_{D\text{-}avg}}{0.08} + \frac{C_{C\text{-}avg}}{0.012} \leq 1.0$$

$C_{D\text{-}avg}$ = average monthly diazinon effluent concentration in µg/L
$C_{C\text{-}avg}$ = average monthly chlorpyrifos effluent concentration in µg/L

ii. Maximum Daily Effluent Limit

$$S_{MDEL} = \frac{C_{D\text{-}max}}{0.16} + \frac{C_{C\text{-}max}}{0.025} \leq 1.0$$

$C_{D\text{-}max}$ = maximum daily diazinon effluent concentration in µg/L
$C_{C\text{-}max}$ = maximum daily chlorpyrifos effluent concentration in µg/L

2. Final Effluent Limitations (Year-Round Tertiary Discharge)

Effective after compliance with Section IV.C.7.a, unless otherwise specified, the Discharger shall maintain compliance with the following effluent limitations for the Tertiary Treatment Plant at Discharge Point No. 001, with compliance measured at Monitoring Location EFF-001B (Tertiary Effluent), as described in the Monitoring and Reporting Program (Attachment E):

a. The Discharger shall maintain compliance with the effluent limitations specified in Table 6b:

Table 6b. Effluent Limitations – Tertiary Effluent

Parameter	Units	Effluent Limitations				
		Average Monthly	Average Weekly	Maximum Daily	Instantaneous Minimum	Instantaneous Maximum
Biochemical Oxygen Demand 5-day @ 20°C	mg/L	10	15	20	--	--
	lbs/day[1]	200	300	400	--	--
	lbs/day[2]	1200	1900	2500	--	--
	lbs/day[3]	1600	2400	3200	--	--
Total Suspended Solids	mg/L	10	15	20	--	--
	lbs/day[1]	200	300	400	--	--
	lbs/day[2]	1200	1900	2500	--	--
	lbs/day[3]	1600	2400	3200	--	--
pH	Standard Units	--	--	--	6.5	8.5
Aluminum (Total recoverable)	µg/L	457	--	750	--	--
Ammonia(as N) (mg/l)	mg/L	1.1	--	2.1	--	--
	lbs/day[1]	20	--	40	--	--
	lbs/day[2]	140	--	260	--	--
	lbs/day[3]	180	--	330	--	--
Copper (Total recoverable)	µg/L	9.5	--	19	--	--
Molybdenum (Total recoverable)	µg/L	--	--	23	--	--
Nitrate + Nitrite (as N)	mg/L	10	--	--	--	--
Electrical Conductivity @ 25ºC (1 April – 30 September)	µmhos/cm	700	--	--	--	--
Electrical Conductivity @ 25ºC (1 October – 31 March)	µmhos/cm	1000	--	--	--	--

[1] Based on a permitted flow of 2.3 mgd. Mass limits effective upon compliance with Special Provisions VI.C.7.a. and until compliance with Special Provisions VI.C.7.b.
[2] Based on a permitted flow of 14.9 mgd. Mass limits effective upon compliance with Special Provisions VI.C.7.b.and until compliance with Special Provisions VI.C.7.c.
[3] Based on a permitted flow of 19.1 mgd. Mass limits effective upon compliance with Special Provisions VI.C.7.c.

b. Percent Removal. The average monthly percent removal of 5-day biochemical oxygen demand (BOD_5) and total suspended solids (TSS) shall not be less than 85 percent.

c. Acute Whole Effluent Toxicity. Survival of aquatic organisms in 96-hour bioassays of undiluted waste shall be no less than:

i. 70%, minimum for any one bioassay; and
ii. 90%, median for any three consecutive bioassays.

d. Total Coliform Organisms. Effluent total coliform organisms shall not exceed:

i. 2.2 most probable number (MPN) per 100 mL, as a 7-day median; and
ii. 23 MPN/100 mL, more than once in any 30-day period; and
iii. 240 MPN/100ml, at any time.

e. Average Daily Discharge Flow.

i. Effective after compliance with Special Provisions ~~I~~VI.C.7.a and until compliance with Special Provisions VI.C.7.b, the average daily discharge flow shall not exceed **2.3 mgd**.

ii. Effective upon compliance with Special Provisions VI.C.7.b. and until compliance with Special Provisions VI.C.7.c, the average daily discharge flow shall not exceed **14.9 mgd**.

iii. Effective upon compliance with Special Provisions VI.C.7.c, the average daily discharge flow shall not exceed **19.1 mgd**.

f. Manganese, Total Recoverable. For a calendar year, the annual average effluent concentration shall not exceed 50 µg/L.

g. Iron, Total Recoverable. For a calendar year, the annual average effluent concentration shall not exceed 300 µg/L.

h. Aluminum, Total Recoverable. For a calendar year, the annual average effluent concentration shall not exceed 200 µg/L.

i. Mercury. The total annual mass discharge of total mercury shall not exceed 1.16 pounds.

j. Chronic Whole Effluent Toxicity. There shall be no chronic toxicity in the effluent discharge.

k. Chlorpyrifos and Diazinon. Effluent chlorpyrifos and diazinon concentrations shall not exceed the sum of one as defined below:

i. Average Monthly Effluent Limit

$$S_{AMEL} = \frac{C_{D\text{-}avg}}{0.08} + \frac{C_{C\text{-}avg}}{0.012} \leq 1.0$$

$C_{D\text{-}avg}$ = average monthly diazinon effluent concentration in µg/L
$C_{C\text{-}avg}$ = average monthly chlorpyrifos effluent concentration in µg/L

ii. Maximum Daily Effluent Limit

$$S_{MDEL} = \frac{C_{D\text{-}max}}{0.16} + \frac{C_{C\text{-}max}}{0.025} \leq 1.0$$

$C_{D\text{-}max}$ = maximum daily diazinon effluent concentration in µg/L
$C_{C\text{-}max}$ = maximum daily chlorpyrifos effluent concentration in µg/L

3. Interim Effluent Limitations

a. Electrical Conductivity (EC). Effective immediately, the secondary effluent measured at EFF-001A and tertiary effluent measured at EFF-001B, shall comply with the interim effluent limitations for EC, as shown in Table 7a. This interim limitation shall apply in lieu of the corresponding final effluent limitations for EC specified in Table 6a (secondary effluent) and Table 6b (tertiary effluent), and shall be in effect while the compliance schedule for EC is in effect (see compliance schedule in Section VI.C.7.d.)

Table 7a. Interim Secondary and Tertiary Effluent Limits for Electrical Conductivity

Parameter	Units	**Interim Average Monthly Effluent Limit**
Electrical Conductivity @ 25ºC	µmhos/cm	1341

b. Ammonia. Effective immediately, and ending 1 May 2018, the Discharger shall maintain compliance with the ammonia maximum daily effluent limitations listed in Table 7b for the secondary effluent. These interim effluent limitations shall apply in lieu of the final average monthly and maximum daily effluent limitations specified for ammonia in Table 6a, for the secondary effluent, only.

Table 7b. Interim Secondary Effluent Limits for Ammonia

pH[1]	Total Ammonia (as N) Maximum Daily Effluent Limitations (mg/L)
6.5	32.6
6.6	31.3
6.7	29.8
6.8	28.0
6.9	26.2
7.0	24.1
7.1	21.9
7.2	19.7
7.3	17.5
7.4	15.3
7.5	13.3
7.6	11.4
7.7	9.64
7.8	8.11
7.9	6.77
8.0	5.62
8.1	4.64
8.2	3.83
8.3	3.15
8.4	2.59
8.5	2.14
8.6	1.77
8.7	1.47
8.8	1.23
8.9	1.04
9.0	0.885

[1] Effluent pH at time of effluent ammonia sampling.

B. Land Discharge Specifications – Not Applicable

Land discharge specifications are included in separate Waste Discharge Requirements Order 99-112.

C. Reclamation Specifications – Not applicable

Reclamation specifications are included in separate Waste Discharge Requirements Order 99-112.

V. RECEIVING WATER LIMITATIONS

A. Surface Water Limitations

Receiving water limitations are based on water quality objectives contained in the Basin Plan and are a required part of this Order. The discharge shall not cause the following in the San Joaquin River:

1. **Bacteria.** The fecal coliform concentration, based on a minimum of not less than five samples for any 30-day period, to exceed a geometric mean of 200 MPN/100 mL, nor more than 10 percent of the total number of fecal coliform samples taken during any 30-day period to exceed 400 MPN/100 mL.

2. **Biostimulatory Substances.** Water to contain biostimulatory substances which promote aquatic growths in concentrations that cause nuisance or adversely affect beneficial uses.

3. **Chemical Constituents.** Chemical constituents to be present in concentrations that adversely affect beneficial uses.

4. **Color.** Discoloration that causes nuisance or adversely affects beneficial uses.

5. **Dissolved Oxygen:**

   a. The monthly median of the mean daily dissolved oxygen concentration to fall below 85 percent of saturation in the main water mass;

   b. The 95 percentile dissolved oxygen concentration to fall below 75 percent of saturation; nor

   c. The dissolved oxygen concentration to be reduced below 7.0 mg/L at any time.

6. **Floating Material.** Floating material to be present in amounts that cause nuisance or adversely affect beneficial uses.

7. **Oil and Grease.** Oils, greases, waxes, or other materials to be present in concentrations that cause nuisance, result in a visible film or coating on the surface of the water or on objects in the water, or otherwise adversely affect beneficial uses.

8. **pH.** The pH to be depressed below 6.5 nor raised above 8.5.

9. **Pesticides:**

   a. Pesticides to be present, individually or in combination, in concentrations that adversely affect beneficial uses;

   b. Pesticides to be present in bottom sediments or aquatic life in concentrations that adversely affect beneficial uses;

   c. Total identifiable persistent chlorinated hydrocarbon pesticides to be present in the water column at concentrations detectable within the accuracy of analytical methods approved by USEPA or the Executive Officer;

d. Pesticide concentrations to exceed those allowable by applicable antidegradation policies (see State Water Board Resolution No. 68-16 and 40 CFR 131.12.);

e. Pesticide concentrations to exceed the lowest levels technically and economically achievable;

f. Pesticides to be present in concentration in excess of the maximum contaminant levels set forth in CCR, Title 22, division 4, chapter;

g. Thiobencarb to be present in excess of 1.0 µg/L.

10. Radioactivity:

a. Radionuclides to be present in concentrations that are harmful to human, plant, animal, or aquatic life nor that result in the accumulation of radionuclides in the food web to an extent that presents a hazard to human, plant, animal, or aquatic life.

b. Radionuclides to be present in excess of the maximum contaminant levels specified in Table 4 (MCL Radioactivity) of section 64443 of Title 22 of the California Code of Regulations.

12. Suspended Sediments. The suspended sediment load and suspended sediment discharge rate of surface waters to be altered in such a manner as to cause nuisance or adversely affect beneficial uses.

13. Settleable Substances. Substances to be present in concentrations that result in the deposition of material that causes nuisance or adversely affects beneficial uses.

14. Suspended Material. Suspended material to be present in concentrations that cause nuisance or adversely affect beneficial uses.

15. Taste and Odors. Taste- or odor-producing substances to be present in concentrations that impart undesirable tastes or odors to fish flesh or other edible products of aquatic origin, or that cause nuisance, or otherwise adversely affect beneficial uses.

16. Temperature. The natural temperature to be increased by more than 5°F.

17. Toxicity. Toxic substances to be present, individually or in combination, in concentrations that produce detrimental physiological responses in human, plant, animal, or aquatic life.

18. Turbidity.

a. Shall not exceed 2 Nephelometric Turbidity Units (NTU) where natural turbidity is less than 1 NTU;

b. Shall not increase more than 1 NTU where natural turbidity is between 1 and 5 NTUs;

c. Shall not increase more than 20 percent where natural turbidity is between 5 and 50 NTUs;

d. Shall not increase more than 10 NTU where natural turbidity is between 50 and 100 NTUs; nor

e. Shall not increase more than 10 percent where natural turbidity is greater than 100 NTUs.

B. Groundwater Limitations – Not Applicable

VI. PROVISIONS

A. Standard Provisions

1. The Discharger shall comply with all Standard Provisions (federal NPDES standard conditions from 40 CFR Part 122) included in Attachment D of this Order.

2. The Discharger shall comply with the following provisions:

a. If the Discharger's wastewater treatment plant is publicly owned or subject to regulation by California Public Utilities Commission, it shall be supervised and operated by persons possessing certificates of appropriate grade according to Title 23, CCR, division 3, chapter 26.

b. After notice and opportunity for a hearing, this Order may be terminated or modified for cause, including, but not limited to:

i. violation of any term or condition contained in this Order;

ii. obtaining this Order by misrepresentation or by failing to disclose fully all relevant facts;

iii. a change in any condition that requires either a temporary or permanent reduction or elimination of the authorized discharge; and

iv. a material change in the character, location, or volume of discharge.

The causes for modification include:

- *New regulations.* New regulations have been promulgated under section 405(d) of the CWA, or the standards or regulations on which the permit was based have been changed by promulgation of amended standards or regulations or by judicial decision after the permit was issued.

- *Land application plans.* When required by a permit condition to incorporate a land application plan for beneficial reuse of sewage sludge, to revise an existing land application plan, or to add a land application plan.

- *Change in sludge use or disposal practice.* Under 40 CFR 122.62(a)(1), a change in the Discharger's sludge use or disposal practice is a cause for modification of the permit. It is cause for revocation and reissuance if the Discharger requests or agrees.

The Central Valley Water Board may review and revise this Order at any time upon application of any affected person or the Central Valley Water Board's own motion.

c. If a toxic effluent standard or prohibition (including any scheduled compliance specified in such effluent standard or prohibition) is established under section 307(a) of the CWA, or amendments thereto, for a toxic pollutant that is present in the discharge authorized herein, and such standard or prohibition is more stringent than any limitation upon such pollutant in this Order, the Central Valley Water Board will revise or modify this Order in accordance with such toxic effluent standard or prohibition.

The Discharger shall comply with effluent standards and prohibitions within the time provided in the regulations that establish those standards or prohibitions, even if this Order has not yet been modified.

d. This Order shall be modified, or alternately revoked and reissued, to comply with any applicable effluent standard or limitation issued or approved under sections 301(b)(2)(C) and (D), 304(b)(2), and 307(a)(2) of the CWA, if the effluent standard or limitation so issued or approved:

i. Contains different conditions or is otherwise more stringent than any effluent limitation in the Order; or

ii. Controls any pollutant limited in the Order.

The Order, as modified or reissued under this paragraph, shall also contain any other requirements of the CWA then applicable.

e. The provisions of this Order are severable. If any provision of this Order is found invalid, the remainder of this Order shall not be affected.

f. The Discharger shall take all reasonable steps to minimize any adverse effects to waters of the State or users of those waters resulting from any discharge or sludge use or disposal in violation of this Order. Reasonable steps shall include such accelerated or additional monitoring as necessary to determine the nature and impact of the non-complying discharge or sludge use or disposal.

g. The Discharger shall ensure compliance with any existing or future pretreatment standard promulgated by USEPA under section 307 of the CWA, or amendment thereto, for any discharge to the municipal system.

h. A copy of this Order shall be maintained at the discharge facility and be available at all times to operating personnel. Key operating personnel shall be familiar with its content.

i. Safeguard to electric power failure:

i. The Discharger shall provide safeguards to assure that, should there be reduction, loss, or failure of electric power, the discharge shall comply with the terms and conditions of this Order.

ii. Upon written request by the Central Valley Water Board, the Discharger shall submit a written description of safeguards. Such safeguards may include alternate power sources, standby generators, retention capacity, operating procedures, or other means. A description of the safeguards provided shall include an analysis of the frequency, duration, and impact of power failures experienced over the past 5 years on effluent quality and on the capability of the Discharger to comply with the terms and conditions of the Order. The adequacy of the safeguards is subject to the approval of the Central Valley Water Board.

iii. Should the treatment works not include safeguards against reduction, loss, or failure of electric power, or should the Central Valley Water Board not approve the existing safeguards, the Discharger shall, within 90 days of having been advised in writing by the Central Valley Water Board that the existing safeguards are inadequate, provide to the Central Valley Water Board and USEPA a schedule of compliance for providing safeguards such that in the event of reduction, loss, or failure of electric power, the Discharger shall comply with the terms and conditions of this Order. The schedule of compliance shall, upon approval of the Central Valley Water Board, become a condition of this Order.

j. The Discharger, upon written request of the Central Valley Water Board, shall file with the Board a technical report on its preventive (failsafe) and contingency (cleanup) plans for controlling accidental discharges, and for minimizing the effect of such events. This report may be combined with that required under Regional Water Board Standard Provision contained in section VI.A.2.i. of this Order.

The technical report shall:

i. Identify the possible sources of spills, leaks, untreated waste by-pass, and contaminated drainage. Loading and storage areas, power outage, waste treatment unit outage, and failure of process equipment, tanks and pipes should be considered.

ii. Evaluate the effectiveness of present facilities and procedures and state when they became operational.

iii. Predict the effectiveness of the proposed facilities and procedures and provide an implementation schedule containing interim and final dates when they will be constructed, implemented, or operational.

The Central Valley Water Board, after review of the technical report, may establish conditions which it deems necessary to control accidental discharges and to minimize the effects of such events. Such conditions shall be incorporated as part of this Order, upon notice to the Discharger.

k. A publicly owned treatment works whose waste flow has been increasing, or is projected to increase, shall estimate when flows will reach hydraulic and treatment capacities of its treatment and disposal facilities. The projections shall be made in January, based on the last 3 years' average dry weather flows, peak wet weather flows and total annual flows, as appropriate. When any projection shows that capacity of any part of the facilities may be exceeded in 4 years, the Discharger shall notify the Central Valley Water Board by 31 January. A copy of the notification shall be sent to appropriate local elected officials, local permitting agencies and the press. Within 120 days of the notification, the Discharger shall submit a technical report showing how it will prevent flow volumes from exceeding capacity or how it will increase capacity to handle the larger flows. The Central Valley Water Board may extend the time for submitting the report.

l. The Discharger shall submit technical reports as directed by the Executive Officer. All technical reports required herein that involve planning, investigation, evaluation, or design, or other work requiring interpretation and proper application of engineering or geologic sciences, shall be prepared by or under the direction of persons registered to practice in California pursuant to California Business and Professions Code, sections 6735, 7835, and 7835.1. To demonstrate compliance with Title 16, CCR, sections 415 and 3065, all technical reports must contain a statement of the qualifications of the responsible registered professional(s). As required by these laws, completed technical reports must bear the signature(s) and seal(s) of the registered professional(s) in a manner such that all work can be clearly attributed to the professional responsible for the work.

m. The Central Valley Water Board is authorized to enforce the terms of this permit under several provisions of the CWC, including, but not limited to, sections 13385, 13386, and 13387.

n. For publicly owned treatment works, prior to making any change in the point of discharge, place of use, or purpose of use of treated wastewater that results in

a decrease of flow in any portion of a watercourse, the Discharger must file a petition with the State Water Board, Division of Water Rights, and receive approval for such a change. (CWC section 1211).

o. In the event the Discharger does not comply or will be unable to comply for any reason, with any prohibition, maximum daily effluent limitation, 1-hour average effluent limitation, or receiving water limitation contained in this Order, the Discharger shall notify the Central Valley Water Board by telephone (916) 464-3291 within 24 hours of having knowledge of such noncompliance, and shall confirm this notification in writing within 5 days, unless the Central Valley Water Board waives confirmation. The written notification shall include the information required by the Standard Provision contained in Attachment D section V.E.1. [40 CFR 122.41(l)(6)(i)].

p. Failure to comply with provisions or requirements of this Order, or violation of other applicable laws or regulations governing discharges from this facility, may subject the Discharger to administrative or civil liabilities, criminal penalties, and/or other enforcement remedies to ensure compliance. Additionally, certain violations may subject the Discharger to civil or criminal enforcement from appropriate local, state, or federal law enforcement entities.

q. In the event of any change in control or ownership of land or waste discharge facilities presently owned or controlled by the Discharger, the Discharger shall notify the succeeding owner or operator of the existence of this Order by letter, a copy of which shall be immediately forwarded to the Central Valley Water Board.

To assume operation under this Order, the succeeding owner or operator must apply in writing to the Executive Officer requesting transfer of the Order. The request must contain the requesting entity's full legal name, the state of incorporation if a corporation, address and telephone number of the persons responsible for contact with the Central Valley Water Board and a statement. The statement shall comply with the signatory and certification requirements in the federal Standard Provisions (Attachment D, section V.B) and state that the new owner or operator assumes full responsibility for compliance with this Order. Failure to submit the request shall be considered a discharge without requirements, a violation of the CWC. Transfer shall be approved or disapproved in writing by the Executive Officer.

B. Monitoring and Reporting Program Requirements

The Discharger shall comply with the Monitoring and Reporting Program, and future revisions thereto, in Attachment E of this Order.

C. Special Provisions

1. Reopener Provisions

a. Conditions that necessitate a major modification of a permit are described in 40 CFR 122.62, including, but not limited to:

i. If new or amended applicable water quality standards are promulgated or approved pursuant to section 303 of the CWA, or amendments thereto, this permit may be reopened and modified in accordance with the new or amended standards.

ii. When new information, that was not available at the time of permit issuance, would have justified different permit conditions at the time of issuance.

b. This Order may be reopened for modification, or revocation and reissuance, as a result of the detection of a reportable priority pollutant generated by special conditions included in this Order. These special conditions may be, but are not limited to, fish tissue sampling, whole effluent toxicity, monitoring requirements on internal waste stream(s), and monitoring for surrogate parameters. Additional requirements may be included in this Order as a result of the special condition monitoring data.

c. Whole Effluent Toxicity. As a result of a Toxicity Reduction Evaluation (TRE), this Order may be reopened to include a numeric chronic toxicity limitation, a new acute toxicity limitation, and/or a limitation for a specific toxicant identified in the TRE. Additionally, if the State Water Board revises the SIP's toxicity control provisions that would require the establishment of numeric chronic toxicity effluent limitations, this Order may be reopened to include a numeric chronic toxicity effluent limitation based on the new provisions.

d. Water Effects Ratios (WER) and Metal Translators. A default WER of 1.0 has been used in this Order for calculating CTR criteria for applicable priority pollutant inorganic constituents. In addition, default dissolved-to-total metal translators have been used to convert water quality objectives from dissolved to total recoverable when developing effluent limitations for aluminum, manganese, molybdenum, and iron. If the Discharger performs studies to determine site-specific WERs and/or site-specific dissolved-to-total metal translators, this Order may be reopened to modify the effluent limitations for the applicable inorganic constituents.

e. <u>**Ultraviolet (UV) Disinfection Operating Specifications.** The UV specifications in this Order are based on the NWRI guidelines. If the Discharger conducts a site-specific UV Engineering study that identifies site-specifc UV operating specifications that will achieve the virus inactivation equivalent to Title 22 disinfected tertiary recycled water, this Order may be reopened to modify the UV specifications.</u>

f. **Molybdenum Effluent Limits.** A maximum daily performance-based effluent limit was calculated for molybdenum. If the Discharger submits new monitoring results with acceptable method detection limits (MDLs) and reporting limits (RLs) (Attchment F, Section IV.C.3.d.xii.(b)), that justifies a different performance-based effluent limit for molybdenum, this Order may be reopened to modify the effluent limitations for molybdenum.

g. **Mercury.** This Order includes a performance-based interim annual mass loading effluent limit for total mercury to cap the discharge until the mercury TMDL is adopted for the San Joaquin River. If a mercury TMDL is adopted for the receiving water this Order may be reopened to modify the effluent limits for total mercury in accordance with the TMDL.

2. Special Studies, Technical Reports and Additional Monitoring Requirements

a. **Chronic Whole Effluent Toxicity.** For compliance with the Basin Plan's narrative toxicity objective, this Order requires the Discharger to conduct chronic whole effluent toxicity (WET) testing, as specified in the Monitoring and Reporting Program (Attachment E, section V). Furthermore, this Provision requires the Discharger to investigate the causes of, and identify corrective actions to reduce or eliminate effluent toxicity. If the discharge exhibits toxicity, as described in subsection ii below, the Discharger is required to initiate a Toxicity Reduction Evaluation (TRE) in accordance with an approved TRE Workplan, and take actions to mitigate the impact of the discharge and prevent recurrence of toxicity. A TRE is a site-specific study conducted in a stepwise process to identify the source(s) of toxicity and the effective control measures for effluent toxicity. TREs are designed to identify the causative agents and sources of effluent toxicity, evaluate the effectiveness of the toxicity control options, and confirm the reduction in effluent toxicity. This Provision includes requirements for the Discharger to develop and submit a TRE Workplan and includes procedures for accelerated chronic toxicity monitoring and TRE initiation.

i. **Accelerated Monitoring and Toxicity Reduction Evaluation (TRE) Initiation.** When the numeric toxicity monitoring trigger is exceeded during regular chronic toxicity monitoring, the Discharger shall initiate accelerated monitoring as required in the Accelerated Monitoring Specifications. The Discharger shall initiate a TRE to address effluent toxicity if any WET testing results exceed the numeric toxicity monitoring trigger during accelerated monitoring.

ii. **Numeric Toxicity Monitoring Trigger.** The numeric toxicity monitoring trigger to initiate a TRE is > **1 TU_C** (where TU_C = 100/NOEC). The monitoring trigger is not an effluent limitation; it is the toxicity threshold at which the Discharger is required to begin accelerated monitoring and initiate a TRE when the effluent exhibits toxicity.

iii. Accelerated Monitoring Specifications. If the numeric toxicity monitoring trigger is exceeded during regular chronic toxicity testing, the Discharger shall initiate accelerated monitoring within 14 days of notification by the laboratory of the exceedance. Accelerated monitoring shall consist of four (4) chronic toxicity tests conducted once every 2 weeks using the species that exhibited toxicity. The following protocol shall be used for accelerated monitoring and TRE initiation:

(a) If the results of four (4) consecutive accelerated monitoring tests do not exceed the monitoring trigger, the Discharger may cease accelerated monitoring and resume regular chronic toxicity monitoring. However, notwithstanding the accelerated monitoring results, if there is evidence of effluent toxicity, the Executive Officer may require that the Discharger initiate a TRE.

(b) If the source(s) of the toxicity is easily identified (e.g., temporary plant upset), the Discharger shall make necessary corrections to the facility and shall continue accelerated monitoring until four (4) consecutive accelerated tests do not exceed the monitoring trigger. Upon confirmation that the effluent toxicity has been removed, the Discharger may cease accelerated monitoring and resume regular chronic toxicity monitoring.

(c) If the result of any accelerated toxicity test exceeds the monitoring trigger, the Discharger shall cease accelerated monitoring and begin a TRE to investigate the cause(s) of, and identify corrective actions to reduce or eliminate effluent toxicity. Within thirty (30) days of notification by the laboratory of any test result exceeding the monitoring trigger during accelerated monitoring, the Discharger shall submit a TRE Action Plan to the Central Valley Water Board including, at minimum:

(1) Specific actions the Discharger will take to investigate and identify the cause(s) of toxicity, including a TRE WET monitoring schedule;

(2) Specific actions the Discharger will take to mitigate the impact of the discharge and prevent the recurrence of toxicity; and

(3) A schedule for these actions.

~~**b. Long-Term Criteria Mixing Zone/Dilution Study.** This Order allows mixing zones and dilution credits for human health carcinogen water quality criteria and agricultural water quality criteria, which are long-term criteria. For these long-term criteria, critical environmental impacts are expected to occur far downstream from the discharge, and the mixing zones have been allowed to extend to the point of complete mixing. The Discharger shall conduct a study to~~

~~evaluate the point of complete mixing under critical reasonable worst-case conditions. The Discharger shall comply with the following schedule:~~

~~Task~~	~~Compliance Date~~
~~i. Submit Study Work Plan~~	~~**1 April 2013**~~
~~ii. Submit Final Study~~	~~**1 February 2014**~~

3. Best Management Practices and Pollution Prevention

a. Pollution Prevention Plan (PPP) for Mercury. The Discharger shall updated and implement a PPP for mercury in accordance with CWC section 13263.3(d)(3). The updated PPP shall be submitted by **1 April 2013**. The minimum requirements for the pollution prevention plan are outlined in the Fact Sheet (Attachment F section VII.B.3). Progress reports shall be submitted in accordance with the Monitoring and Reporting Program (Attachment E section X.D.1).

4. Construction, Operation and Maintenance Specifications

a. Ultraviolet (UV) Disinfection System Operating Specifications. The Discharger shall operate the UV disinfection system to provide a minimum hourly UV dose per channel of 80 millijoules per square centimeter (mJ/cm^2) at peak daily flow, and shall meet~~ing~~ the following operating specifications while discharging to the San Joaquin River.

i. The Discharger shall provide continuous, reliable monitoring of flow, UV transmittance, UV power, and turbidity.

ii. The Discharger shall operate the treatment system to insure that turbidity prior to disinfection, measured at UVS-001 and UVS-002, shall not exceed

(a) 0.2 NTU, as a daily average;

(b) 0.5 NTU, more than 5% of the time within a 24-hour period; and

(c) 1 NTU, at any time

iii. The UV transmittance (at 254 nanometers) in the wastewater exiting the UV disinfection system shall not fall below 55 percent of maximum at any time.

iv. The quartz sleeves and cleaning system components must be visually inspected per the manufacturer's operations manual for physical wear (scoring, solarization, seal leaks, cleaning fluid levels, etc.) and to check the efficacy of the cleaning system.

v. Lamps must be replaced per the manufacturer's operations manual, or sooner, if there are indications the lamps are failing to provide adequate disinfection. Lamp age and lamp replacement records must be maintained.

vi. The Facility must be operated in accordance with an operations and maintenance program that assures adequate disinfection.

5. Special Provisions for Municipal Facilities (POTWs Only)

a. Pretreatment Requirements.

i. The Discharger shall be responsible and liable for the performance of all Control Authority pretreatment requirements contained in 40 CFR Part 403, including any subsequent regulatory revisions to 40 CFR Part 403. Where 40 CFR Part 403 or subsequent revision places mandatory actions upon the Discharger as Control Authority but does not specify a timetable for completion of the actions, the Discharger shall complete the required actions within 6 months from the issuance date of this permit or the effective date of the 40 CFR Part 403 revisions, whichever comes later. For violations of pretreatment requirements, the Discharger shall be subject to enforcement actions, penalties, fines, and other remedies by USEPA or other appropriate parties, as provided in the CWA.

ii. The Discharger shall enforce the requirements promulgated under sections 307(b), 307(c), 307(d), and 402(b) of the CWA with timely, appropriate and effective enforcement actions. The Discharger shall cause all nondomestic users subject to federal categorical standards to achieve compliance no later than the date specified in those requirements or, in the case of a new nondomestic user, upon commencement of the discharge.

iii. The Discharger shall perform the pretreatment functions as required in 40 CFR Part 403 including, but not limited to:

(a) Implement the necessary legal authorities as provided in 40 CFR 403.8(f)(1);

(b) Enforce the pretreatment requirements under 40 CFR 403.5 and 403.6;

(c) Implement the programmatic functions as provided in 40 CFR 403.8(f)(2); and

(d) Provide the requisite funding and personnel to implement the pretreatment program as provided in 40 CFR 403.8(f)(3)

iv. The Discharger shall implement, as more completely set forth in 40 CFR 403.5, the necessary legal authorities, programs, and controls to

ensure that the following incompatible wastes are not introduced to the treatment system, where incompatible wastes are:

(a) Wastes which create a fire or explosion hazard in the treatment works;

(b) Wastes which will cause corrosive structural damage to treatment works, but in no case wastes with a pH lower than 5.0, unless the works is specially designed to accommodate such wastes;

(c) Solid or viscous wastes in amounts which cause obstruction to flow in sewers, or which cause other interference with proper operation or treatment works;

(d) Any waste, including oxygen demanding pollutants (BOD, etc.), released in such volume or strength as to cause inhibition or disruption in the treatment works, and subsequent treatment process upset and loss of treatment efficiency;

(e) Heat in amounts that inhibit or disrupt biological activity in the treatment works, or that raise influent temperatures above 40°C (104°F), unless the Central Valley Water Board approves alternate temperature limits;

(f) Petroleum oil, non-biodegradable cutting oil, or products of mineral oil origin in amounts that will cause interference or pass through;

(g) Pollutants which result in the presence of toxic gases, vapors, or fumes within the treatment works in a quantity that may cause acute worker health and safety problems; and:

Any trucked or hauled pollutants, except at points predesignated by the Discharger.

v. The Discharger shall implement, as more completely set forth in 40 CFR 403.5, the legal authorities, programs, and controls necessary to ensure that indirect discharges do not introduce pollutants into the sewerage system that, either alone or in conjunction with a discharge or discharges from other sources:

(a) Flow through the system to the receiving water in quantities or concentrations that cause a violation of this Order, or:

Inhibit or disrupt treatment processes, treatment system operations, or sludge processes, use, or disposal and either cause a violation of this Order or prevent sludge use or disposal in accordance with this Order.

b. Collection System. On 2 May 2006, the State Water Board adopted State Water Resources Control Board Order No. 2006-0003-DWQ, Statewide General Waste Discharge Requirements (WDRs) for Sanitary Sewer Systems. The Discharger shall be subject to the requirements of Order

No. 2006-0003-DWQ and any future revisions thereto. Order No. 2006-0003-DWQ requires that all public agencies that currently own or operate sanitary sewer systems apply for coverage under the general WDRs. The Discharger has applied for and has been approved for coverage under Order 2006-0003-DWQ for operation of its wastewater collection system.

Regardless of the coverage obtained under Order 2006 0003, the Discharger's collection system is part of the treatment system that is subject to this Order. As such, pursuant to federal regulations, the Discharger must properly operate and maintain its collection system [40 CFR section 122.41(e)], report any non-compliance [40 CFR section 122.41(l)(6) and (7)], and mitigate any discharge from the collection system in violation of this Order [40 CFR. section 122.41(d)].

6. Other Special Provisions

a. The year-round tertiary discharge shall be oxidized, filtered, and adequately disinfected pursuant to the Department of Public Health (DPH) reclamation criteria, CCR, Title 22, division 4, chapter 3, (Title 22), or equivalent.

b. In the event of any change in control or ownership of land or waste discharge facilities presently owned or controlled by the Discharger, the Discharger shall notify the succeeding owner or operator of the existence of this Order by letter, a copy of which shall be immediately forwarded to the Regional Water Board.

To assume operation under this Order, the succeeding owner or operator must apply in writing to the Executive Officer requesting transfer of the Order. The request must contain the requesting entity's full legal name, the State of incorporation if a corporation, address and telephone number of the persons responsible for contact with the Regional Water Board and a statement. The statement shall comply with the signatory and certification requirements in the Federal Standard Provisions (Attachment D, Section V.B.) and state that the new owner or operator assumes full responsibility for compliance with this Order. Failure to submit the request shall be considered a discharge without requirements, a violation of the California Water Code. Transfer shall be approved or disapproved in writing by the Executive Officer.

7. Compliance Schedules

a. Year-Round Tertiary Discharge, Phase 1A (2.3 mgd). The Discharger has requested to be permitted to discharge up to 2.3 mgd year round to the San Joaquin River upon completion of the Phase 1A upgrade. The permitted discharge flow to the San Joaquin River is subject to compliance with the following conditions:

i. **Facility Improvements.** The Discharger shall have completed construction and startup of the Phase 1A upgrades with a design capacity of at least 2.3 mgd, as identified in the Fact Sheet II.E; and

ii. **Design Approval.** The Discharger shall provide evidence, certified by the plant design engineer, that the plant is operating properly; and

iii. **Compliance with Effluent and Receiving Water Limits.** The facility shall be in compliance with all final effluent and receiving water limits, except for the final effluent limits for electrical conductivity required in Table 6b; if Compliance Schedule VI.C.7.d is in effect, and

iv. **Request for Flow Increase.** The Discharger shall notify the Executive Officer of its compliance with item i-iii, above. The 2.3 mgd tertiary discharge shall not commence until the Executive Officer verifies compliance with Special Provisions VI.C.7.a

b. Year-Round Tertiary Discharge, Phase 2 (14.9 mgd). The Discharger has requested to be permitted to discharge up to 14.9 mgd year round to the San Joaquin River upon completion of the Phase 2 upgrades. The permitted discharge flow to the San Joaquin River is subject to compliance with the following conditions:

i. **Facility Improvements.** The Discharger shall have completed construction and startup of the Phase 2 upgrades with a design capacity of at least 14.9 mgd, as identified in the Fact Sheet II.E; and

ii. **Design Approval.** The Discharger shall provide evidence, certified by the plant design engineer, that the plant is operating properly; and

iii. **Compliance with Effluent and Receiving Water Limits.** The facility shall be in compliance with all final effluent and receiving water limits, except for the final effluent limits for electrical conductivity required in Table 6b; if Compliance Schedule VI.C.7.d is in effect, and

iv. **Request for Flow Increase.** The Discharger shall notify the Executive Officer of its compliance with item i-iii, above. The tertiary discharge shall not increase to 14.9 mgd until the Executive Officer verifies compliance with Special Provisions VI.C.7.b.

c. **Year-Round Tertiary Discharge, Phase 3 (19.1 mgd).** The Discharger has requested to be permitted to discharge up to 19.1 mgd year round to the San Joaquin River upon completion of the Phase 3 upgrades. The permitted discharge flow to the San Joaquin River is subject to compliance with the following conditions:

   i. **Facility Improvements.** The Discharger shall have completed construction and startup of the Phase 3 upgrades with a design capacity of at least 19.1 mgd, as identified in the Fact Sheet II.E; and

   ii. **Design Approval.** The Discharger shall provide evidence, certified by the plant design engineer, that the plant is operating properly; and

   iii. **Compliance with Effluent and Receiving Water Limits.** The facility shall be in compliance with all final effluent and receiving water limits, except for the final effluent limits for electrical conductivity required in Table 6b; if Compliance Schedule VI.C.7.d is in effect, and

   iv. **Request for Flow Increase.** The Discharger shall notify the Executive Officer of its compliance with item i-iii, above. The tertiary discharge shall not increase to 19.1 mgd until the Executive Officer verifies compliance with Special Provisions VI.C.7.c

d. **Compliance Schedule for Final Effluent Limitations for Electrical Conductivity.** The Discharger shall comply with the following time schedule to ensure compliance with the final effluent limitations for Electrical Conductivity in Table 6a (secondary effluent) and Table 6b (tertiary effluent):

Task	Date Due
Submit Method of Compliance Workplan/schedule	Complete[1]
Update and Implement~~n~~ Pollution Prevention Plan (PPP) for Salinity[2]	**31 December 2012**
Annual Progress Reports[3]	**1 September**, annually until final compliance
Full compliance with final electrical conductivity effluent limitations	**28 July 2022[4] or 28 July 2026[5]**

1 The City of Modesto Salinity Method of Compliance Work Plan was submitted on 1 June 2009.

2 The Discharger shall submit and implement a PPP for salinity in accordance with CWC Section 13263.3(d)(3).

3 The progress reports shall detail what steps have been implemented towards achieving compliance with waste discharge requirements, including studies, construction progress, evaluation of measures implemented, and recommendations for additional measures as necessary to achieve full compliance by the final date.

4 For all water year types, except critically dry.

5 For critically dry years, full compliance not required until 28 July 2026.

e. Compliance Schedule for Final Effluent Limitations for Ammonia (Secondary Effluent). The Discharger shall comply with the following time schedule to cease the secondary effluent discharge to the San Joaquin River:

Task	Date Due
i. Submit Method of Compliance Workplan/Schedule	**Complete**
ii. Submit and implement Pollution Prevention Plan (PPP) for ammonia[2].	**31 December 2012**
iii. Begin construction of Phase 2 Facility Upgrade Project.	**1 June 2014**
iv. Complete Construction of Phase 2 Facility Upgrade Project	**31 December 2017**
v. Progress Reports[1]	**1 September**, annually until final compliance
vi. Full Compliance (i.e., cease secondary discharge)	**1 May 2018**

[1] The progress reports shall detail what steps have been implemented towards achieving compliance with waste discharge requirements, including studies, construction progress, evaluation of measures implemented, and recommendations for additional measures as necessary to achieve full compliance by the final compliance date.

[2] The Discharger shall submit and implement a PPP for ammonia in accordance with CWC Section 13263.3(d)(3).

VII. COMPLIANCE DETERMINATION

A. BOD_5 and TSS Effluent Limitations (Sections IV.A.1.a. and IV.A.2.a.). Compliance with the final effluent limitations for BOD_5 and TSS required in Limitations and Discharge Requirements sections **IV.A.1.a. and IV.A.2.a.** shall be ascertained by 24-hour composite samples. Compliance with effluent limitations required in Limitations and Discharge Requirements sections **IV.A.1.b. and IV.A.2.b.** for percent removal shall be calculated using the arithmetic mean of BOD_5 and TSS in effluent samples collected over a monthly period as a percentage of the arithmetic mean of the values for influent samples collected at approximately the same times during the same period.

B. Aluminum Effluent Limitations (Sections IV.A.1.j. and IV.A.2.i.). Compliance with the final effluent limitations for aluminum can be demonstrated using either total or acid-soluble (inductively coupled plasma/atomic emission spectrometry or inductively coupled plasma/mass spectrometry) analysis methods, as supported by USEPA's Ambient Water Quality Criteria for Aluminum document (EPA 440/5-86-008), or other standard methods that exclude aluminum silicate particles as approved by the Executive Officer.

C. Total Mercury Mass Loading Effluent Limitations (Sections IV.A.1.k. and IV.A.2.j.). The procedures for calculating mass loadings are as follows:

1. The total pollutant mass load for each individual calendar month shall be determined using an average of all concentration data collected that month and the corresponding total monthly flow. All effluent monitoring data collected under the monitoring and reporting program, pretreatment program, and any special studies shall be used for these calculations. The total annual mass loading shall be the sum of the individual calendar months.

2. In calculating compliance, the Discharger shall count all non-detect measures at one-half of the detection level. If compliance with the effluent limitation is not attained due to the non-detect contribution, the Discharger shall improve and implement available analytical capabilities and compliance shall be evaluated with consideration of the detection limits.

D. Average Daily Discharge Flow Effluent Limitations (Sections IV.A.1.f. and IV.A.2.e.). Compliance with the average daily discharge flow effluent limitations will be determined based on the average flow measured anytime the Facility is discharging to the San Joaquin River.

E. Total Coliform Organisms Effluent Limitations (Sections IV.A.1.e. and IV.A.2.d.). For each day that an effluent sample is collected and analyzed for total coliform organisms, the 7-day median shall be determined by calculating the median concentration of total coliform bacteria in the effluent utilizing the bacteriological results of the last 7 days. For example, if a sample is collected on a Wednesday, the result from that sampling event and all results from the previous 6 days (i.e., Tuesday, Monday, Sunday, Saturday, Friday, and Thursday) are used to calculate the 7-day

median. If the 7-day median of total coliform organisms exceeds a most probable number (MPN) of 23 per 100 milliliters, the Discharger will be considered out of compliance.

F. **Total Residual Chlorine Effluent Limitations (Section IV.A.1.d.).** Continuous monitoring analyzers for chlorine residual or for dechlorination agent residual in the effluent are appropriate methods for compliance determination. A positive residual dechlorination agent in the effluent indicates that chlorine is not present in the discharge, which demonstrates compliance with the effluent limitations. This type of monitoring can also be used to prove that some chlorine residual exceedances are false positives. Continuous monitoring data showing either a positive dechlorination agent residual or a chlorine residual at or below the prescribed limit are sufficient to show compliance with the total residual chlorine effluent limitations, as long as the instruments are maintained and calibrated in accordance with the manufacturer's recommendations.

Any excursion above the 1-hour average or 4-day average total residual chlorine effluent limitations is a violation. If the Discharger conducts continuous monitoring and the Discharger can demonstrate, through data collected from a back-up monitoring system, that a chlorine spike recorded by the continuous monitor was not actually due to chlorine, then any excursion resulting from the recorded spike will not be considered an exceedance, but rather reported as a false positive. Records supporting validation of false positives shall be maintained in accordance with Section IV Standard Provisions (Attachment D).

G. **Mass Effluent Limitations.** The mass effluent limitations contained in the Final Effluent Limitations IV.A.1.a. (secondary effluent) and IV.A.2.a. (tertiary effluent) are based on the permitted average daily discharge flow and calculated as follows:

Mass (lbs/day) = Flow (MGD) x Concentration (mg/L) x 8.34 (conversion factor)

The mass limits are applicable **<u>at all times</u>** the Facility is discharging to the San Joaquin River, for the secondary effluent and the tertiary effluent.

H. Priority Pollutant Effluent Limitations. Compliance with effluent limitations for priority pollutants shall be determined using sample reporting protocols defined in Attachment A and Attachment E of this Order. For purposes of reporting and administrative enforcement by the Central Valley Water Board and the State Water Board, the Discharger shall be deemed out of compliance with effluent limitations if the concentration of the priority pollutant in the monitoring sample is greater than the effluent limitation and greater than or equal to the reporting level (RL).

Compliance with effluent limitations shall be determined as follows:

1. Dischargers shall be deemed out of compliance with an effluent limitation, if the concentration of the priority pollutant in the monitoring sample is greater than the effluent limitation and greater than or equal to the RL.

2. Dischargers shall be required to conduct a Pollutant Minimization Program (PMP) in accordance with section 2.4.5.1 of the SIP when there is evidence (e.g., sample results reported as DNQ when the effluent limitation is less than the MDL, sample results from analytical methods more sensitive than those methods included in the permit in accordance with sections 2.4.2 or 2.4.3 of the SIP, presence of whole effluent toxicity, health advisories for fish consumption, results of benthic or aquatic organism tissue sampling) that the priority pollutant is present in the effluent above an effluent limitation and either:

a. A sample result is reported as “Detected, but Not Quantified” (DNQ) and the effluent limitation is less than the RL; or

b. A sample result is reported as “Not Detected” (ND) and the effluent limitation is less than the MDL.

When determining compliance with an AMEL and more than one sample result is available in a month, the Discharger shall compute the arithmetic mean unless the data set contains one or more reported determinations of DNQ or ND. In those cases, the Discharger shall compute the median in place of the arithmetic mean in accordance with the following procedure:

1. The data set shall be ranked from low to high, ranking the reported ND determinations lowest, DNQ determinations next, followed by quantified values (if any). The order of the individual ND or DNQ determinations is unimportant.

2. The median value of the data set shall be determined. If the data set has an odd number of data points, then the median is the middle value. If the data set has an even number of data points, then the median is the average of the two values around the middle unless one or both of the points are ND or DNQ, in which case the median value shall be the lower of the two data points where DNQ is lower than a value and ND is lower than DNQ.

If a sample result, or the arithmetic mean or median of multiple sample results, is below the RL, and there is evidence that the priority pollutant is present in the effluent

above an effluent limitation and the Discharger conducts a PMP (as described in section 2.4.5.1 of the SIP), the Discharger shall not be deemed out of compliance.

"2.4.5.1 Pollutant Minimization Program

The goal of the PMP shall be to reduce all potential sources of a priority pollutant(s) through pollutant minimization (control) strategies, including pollution prevention measures as appropriate, to maintain the effluent concentration at or below the water quality-based effluent limitation…."

I. **Chronic Whole Effluent Toxicity Effluent Limitation (Sections IV.A.1.l. and IV.A.2.k.**). Compliance with the accelerated monitoring and TRE/TIE provisions of Provision VI.C.2.a shall constitute compliance with the effluent limitation.

J. **Temperature Receiving Water Limitations (Section V.A.16).** Compliance with the temperature receiving water limitations will be determined based on the difference in the natural temperature measured at RSW-001 as compared to the downstream at RSW-002.

K. **Turbidity Receiving Water Limitations (Section V.A.~~17~~18.a-e).** Compliance with the turbidity receiving water limitations will be determined based on the change in turbidity measured at RSW-001 as compared to the downstream at RSW-002.

L. **Chlorpyrifos and Diazinon Effluent Limitations (Sections IV.A.1.l and IV.A.2.k).** Compliance shall be determined by calculating the sum (S), as provided in this Order, with analytical results that are reported as "non-detectable" concentrations to be considered to be zero.

ATTACHMENT A – DEFINITIONS

Arithmetic Mean (μ)
Also called the average, is the sum of measured values divided by the number of samples. For ambient water concentrations, the arithmetic mean is calculated as follows:

Arithmetic mean = $\mu = \Sigma x / n$ where: Σx is the sum of the measured ambient water concentrations, and n is the number of samples.

Average Annual Effluent Limitation
The highest allowable average of discharges over a calendar year, calculated as the sum of the monthly averages divided by the number months with discharge in that calendar year.

Average Monthly Effluent Limitation (AMEL)
The highest allowable average of daily discharges over a calendar month, calculated as the sum of all daily discharges measured during a calendar month divided by the number of daily discharges measured during that month.

Average Weekly Effluent Limitation (AWEL)
The highest allowable average of daily discharges over a calendar week (Sunday through Saturday), calculated as the sum of all daily discharges measured during a calendar week divided by the number of daily discharges measured during that week.

Bioaccumulative
Those substances taken up by an organism from its surrounding medium through gill membranes, epithelial tissue, or from food and subsequently concentrated and retained in the body of the organism.

Carcinogenic
Pollutants are substances that are known to cause cancer in living organisms.

Coefficient of Variation (CV)
CV is a measure of the data variability and is calculated as the estimated standard deviation divided by the arithmetic mean of the observed values.

Daily Discharge
Daily Discharge is defined as either: (1) the total mass of the constituent discharged over the calendar day (12:00 am through 11:59 pm) or any 24-hour period that reasonably represents a calendar day for purposes of sampling (as specified in the permit), for a constituent with limitations expressed in units of mass or; (2) the unweighted arithmetic mean measurement of the constituent over the day for a constituent with limitations expressed in other units of measurement (e.g., concentration).

The daily discharge may be determined by the analytical results of a composite sample taken over the course of 1 day (a calendar day or other 24-hour period defined as a day) or by the arithmetic mean of analytical results from one or more grab samples taken over the course of the day.

For composite sampling, if 1 day is defined as a 24-hour period other than a calendar day, the analytical result for the 24-hour period will be considered as the result for the calendar day in which the 24-hour period ends.

Detected, but Not Quantified (DNQ)
DNQ are those sample results less than the RL, but greater than or equal to the laboratory's MDL.

Dilution Credit
Dilution Credit is the amount of dilution granted to a discharge in the calculation of a water quality-based effluent limitation, based on the allowance of a specified mixing zone. It is calculated from the dilution ratio or determined through conducting a mixing zone study or modeling of the discharge and receiving water.

Effect Concentration (EC): a point estimate of the toxicant concentration that would cause an observable adverse effect (e.g. death, immobilization, or serious incapitation) in a given percent of the test organisms, calculated from a continuous model (e.g. Probit Model). EC_{25} is a point estimate of the toxicant concentration that would cause an observable adverse effect in 25 percent of the test organisms.

Effluent Concentration Allowance (ECA)
ECA is a value derived from the water quality criterion/objective, dilution credit, and ambient background concentration that is used, in conjunction with the coefficient of variation for the effluent monitoring data, to calculate a long-term average (LTA) discharge concentration. The ECA has the same meaning as waste load allocation (WLA) as used in USEPA guidance (Technical Support Document For Water Quality-based Toxics Control, March 1991, second printing, EPA/505/2-90-001).

Enclosed Bays
Enclosed Bays means indentations along the coast that enclose an area of oceanic water within distinct headlands or harbor works. Enclosed bays include all bays where the narrowest distance between the headlands or outermost harbor works is less than 75 percent of the greatest dimension of the enclosed portion of the bay. Enclosed bays include, but are not limited to, Humboldt Bay, Bodega Harbor, Tomales Bay, Drake's Estero, San Francisco Bay, Morro Bay, Los Angeles-Long Beach Harbor, Upper and Lower Newport Bay, Mission Bay, and San Diego Bay. Enclosed bays do not include inland surface waters or ocean waters.

Estimated Chemical Concentration
The estimated chemical concentration that results from the confirmed detection of the substance by the analytical method below the ML value.

Estuaries
Estuaries means waters, including coastal lagoons, located at the mouths of streams that serve as areas of mixing for fresh and ocean waters. Coastal lagoons and mouths of streams that are temporarily separated from the ocean by sandbars shall be considered estuaries. Estuarine waters shall be considered to extend from a bay or the open ocean to a point upstream where there is no significant mixing of fresh water and seawater. Estuarine waters included, but are not limited to, the Sacramento-San Joaquin Delta, as defined in CWC section

12220, Suisun Bay, Carquinez Strait downstream to the Carquinez Bridge, and appropriate areas of the Smith, Mad, Eel, Noyo, Russian, Klamath, San Diego, and Otay rivers. Estuaries do not include inland surface waters or ocean waters.

Inhibition Concentration (IC): a point estimate of the toxicant concentration that would cause a given percent reduction in a non-lethal biological measurement (e.g. reproduction or growth), calculated from a continuous model (e.g. Interpolation Method). IC_{25} is a point estimate of the toxicant concentration that would cause a 25 percent reduction in a non-lethal biological measurement.

Inland Surface Waters
All surface waters of the State that do not include the ocean, enclosed bays, or estuaries.

Instantaneous Maximum Effluent Limitation
The highest allowable value for any single grab sample or aliquot (i.e., each grab sample or aliquot is independently compared to the instantaneous maximum limitation).

Instantaneous Minimum Effluent Limitation
The lowest allowable value for any single grab sample or aliquot (i.e., each grab sample or aliquot is independently compared to the instantaneous minimum limitation).

LC_{50}, Lethal Concentration, 50 percent: the toxic or effluent concentration that would cause death in 50 percent of the test organisms over a specified period of time.

LOEC, Lowest Observed Effect Concentration: the lowest concentration of an effluent or toxicant that results in adverse effects on the test organism (i.e. where the values for the observed endpoints are statistically different from the control).

Maximum Daily Effluent Limitation (MDEL)
The highest allowable daily discharge of a pollutant, over a calendar day (or 24-hour period). For pollutants with limitations expressed in units of mass, the daily discharge is calculated as the total mass of the pollutant discharged over the day. For pollutants with limitations expressed in other units of measurement, the daily discharge is calculated as the arithmetic mean measurement of the pollutant over the day.

Median
The middle measurement in a set of data. The median of a set of data is found by first arranging the measurements in order of magnitude (either increasing or decreasing order). If the number of measurements (n) is odd, then the median = $X_{(n+1)/2}$. If n is even, then the median = $(X_{n/2} + X_{(n/2)+1})/2$ (i.e., the midpoint between the $n/2$ and $n/2+1$).

Method Detection Limit (MDL)
MDL is the minimum concentration of a substance that can be measured and reported with 99 percent confidence that the analyte concentration is greater than zero, as defined in 40 CFR Part 136, Attachment B, revised as of 3 July 1999.

Minimum Level (ML)
ML is the concentration at which the entire analytical system must give a recognizable signal and acceptable calibration point. The ML is the concentration in a sample that is equivalent to the concentration of the lowest calibration standard analyzed by a specific analytical procedure, assuming that all the method specified sample weights, volumes, and processing steps have been followed.

Mixing Zone
Mixing Zone is a limited volume of receiving water that is allocated for mixing with a wastewater discharge where water quality criteria can be exceeded without causing adverse effects to the overall water body.

NOEC, No Observed Effect Concentration: the highest tested concentration of an effluent or test sample whose effect is not different from the control effect, according to the statistical test used (see LOEC). The NOEC is usually the highest tested concentration of an effluent or toxic that causes no observable effects on the test organisms (i.e. the highest concentration of toxicity at which the values for the observed responses do not statistically differ from the controls).

Not Detected (ND)
Sample results which are less than the laboratory's MDL.

Ocean Waters
The territorial marine waters of the State as defined by California law to the extent these waters are outside of enclosed bays, estuaries, and coastal lagoons. Discharges to ocean waters are regulated in accordance with the State Water Board's California Ocean Plan.

Persistent Pollutants
Persistent pollutants are substances for which degradation or decomposition in the environment is nonexistent or very slow.

Pollutant Minimization Program (PMP)
PMP means waste minimization and pollution prevention actions that include, but are not limited to, product substitution, waste stream recycling, alternative waste management methods, and education of the public and businesses. The goal of the PMP shall be to reduce all potential sources of a priority pollutant(s) through pollutant minimization (control) strategies, including pollution prevention measures as appropriate, to maintain the effluent concentration at or below the water quality-based effluent limitation. Pollution prevention measures may be particularly appropriate for persistent bioaccumulative priority pollutants where there is evidence that beneficial uses are being impacted. The Central Valley Water Board may consider cost effectiveness when establishing the requirements of a PMP. The completion and implementation of a Pollution Prevention Plan, if required pursuant to CWC section 13263.3(d), shall be considered to fulfill the PMP requirements.

Pollution Prevention
Pollution Prevention means any action that causes a net reduction in the use or generation of a hazardous substance or other pollutant that is discharged into water and includes, but is not limited to, input change, operational improvement, production process change, and product reformulation (as defined in Water Code section 13263.3). Pollution prevention does not include actions that merely shift a pollutant in wastewater from one environmental medium to another environmental medium, unless clear environmental benefits of such an approach are identified to the satisfaction of the State or Regional Water Board.

Reporting Level (RL)
RL is the ML (and its associated analytical method) chosen by the Discharger for reporting and compliance determination from the MLs included in this Order. The MLs included in this Order correspond to approved analytical methods for reporting a sample result that are selected by the Central Valley Water Board either from Appendix 4 of the SIP in accordance with section 2.4.2 of the SIP or established in accordance with section 2.4.3 of the SIP. The ML is based on the proper application of method-based analytical procedures for sample preparation and the absence of any matrix interferences. Other factors may be applied to the ML depending on the specific sample preparation steps employed. For example, the treatment typically applied in cases where there are matrix-effects is to dilute the sample or sample aliquot by a factor of ten. In such cases, this additional factor must be applied to the ML in the computation of the RL.

Satellite Collection System
The portion, if any, of a sanitary sewer system owned or operated by a different public agency than the agency that owns and operates the wastewater treatment facility that a sanitary sewer system is tributary to.

Source of Drinking Water
Any water designated as municipal or domestic supply (MUN) in a Regional Water Board Basin Plan.

Standard Deviation (σ)
Standard Deviation is a measure of variability that is calculated as follows:

$$\sigma = (\sum[(x - \mu)^2]/(n - 1))^{0.5}$$

where:

- x is the observed value;
- μ is the arithmetic mean of the observed values; and
- n is the number of samples.

Toxicity Reduction Evaluation (TRE)
TRE is a study conducted in a step-wise process designed to identify the causative agents of effluent or ambient toxicity, isolate the sources of toxicity, evaluate the effectiveness of toxicity control options, and then confirm the reduction in toxicity. The first steps of the TRE consist of the collection of data relevant to the toxicity, including additional toxicity testing, and an evaluation of facility operations and maintenance practices, and best management practices. A Toxicity Identification Evaluation (TIE) may be required as part of the TRE, if appropriate. (A TIE is a set of procedures to identify the specific chemical(s) responsible for toxicity. These procedures are performed in three phases (characterization, identification, and confirmation) using aquatic organism toxicity tests.)

ATTACHMENT B – MAP 1

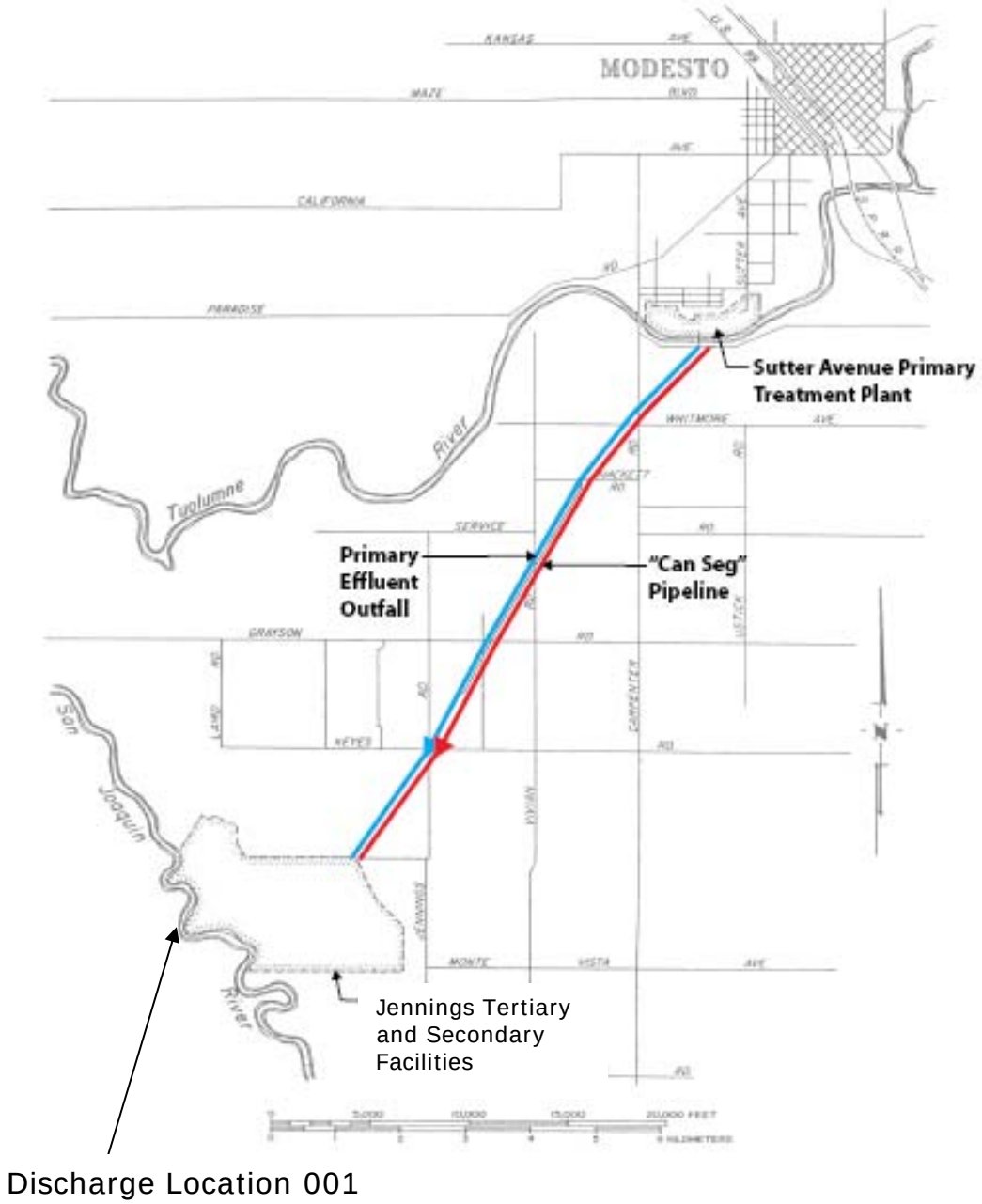

Drawing Reference: CITY OF MODESTO ENGINEER'S REPORT *Draft July 2006*	**SITE LOCATION MAP** CITY OF MODESTO WATER QUALITY CONTROL FACILITY STANISLAUS COUNTY	N W E S

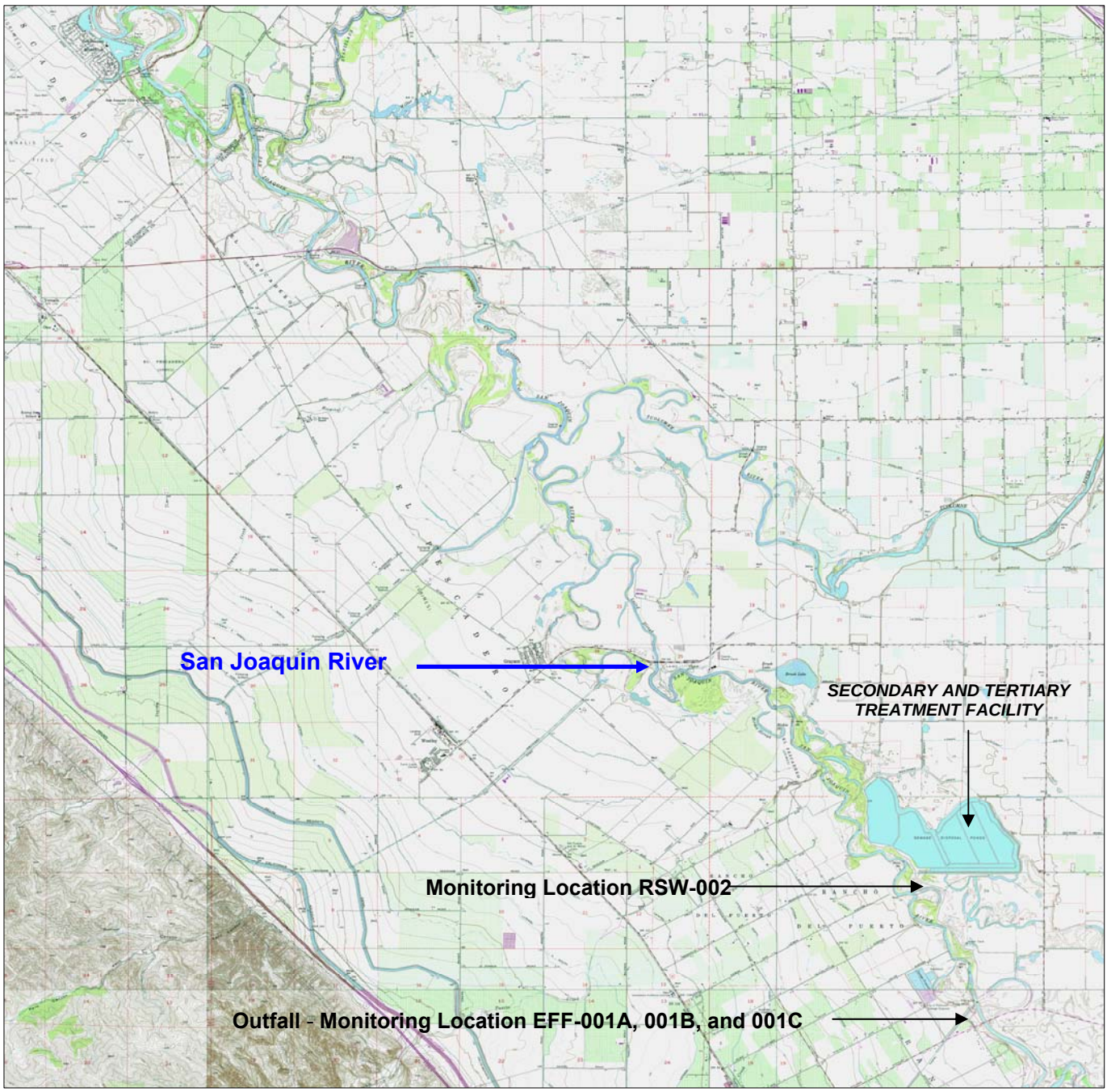

ATTACHMENT B- MAP 2	**MONITORING LOCATIONS** CITY OF MODESTO WATER QUALITY CONTROL FACILITY STANISLAUS COUNTY	

Monitoring Location RSW-001

ATTACHMENT C – FLOW SCHEMATIC

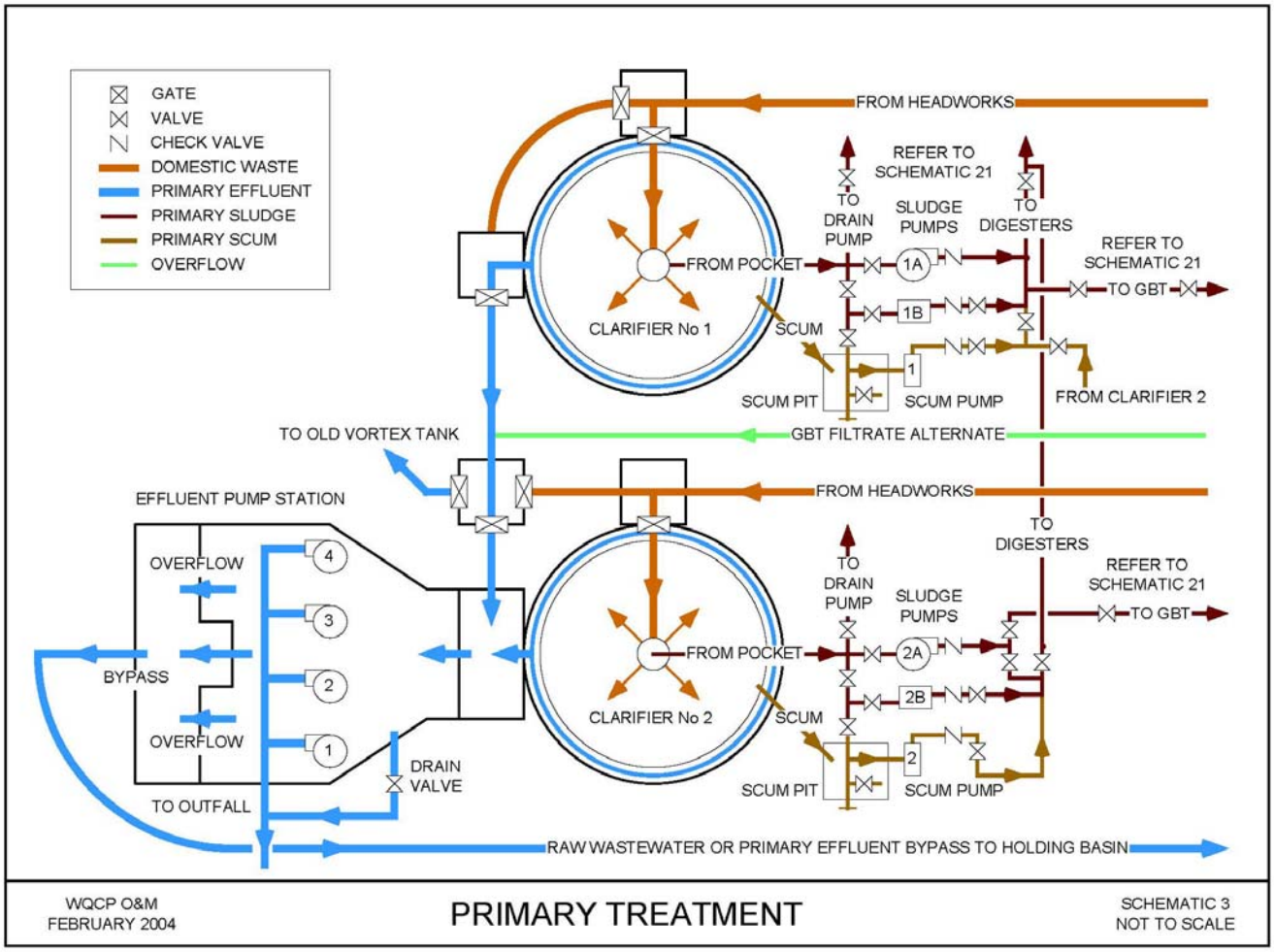

ATTACHMENT C- **PROCESS FLOW DIAGRAM 1**	**PRIMARY SITE FLOW ROUTING** CITY OF MODESTO WATER QUALITY CONTROL FACILITY STANISLAUS COUNTY	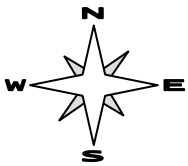

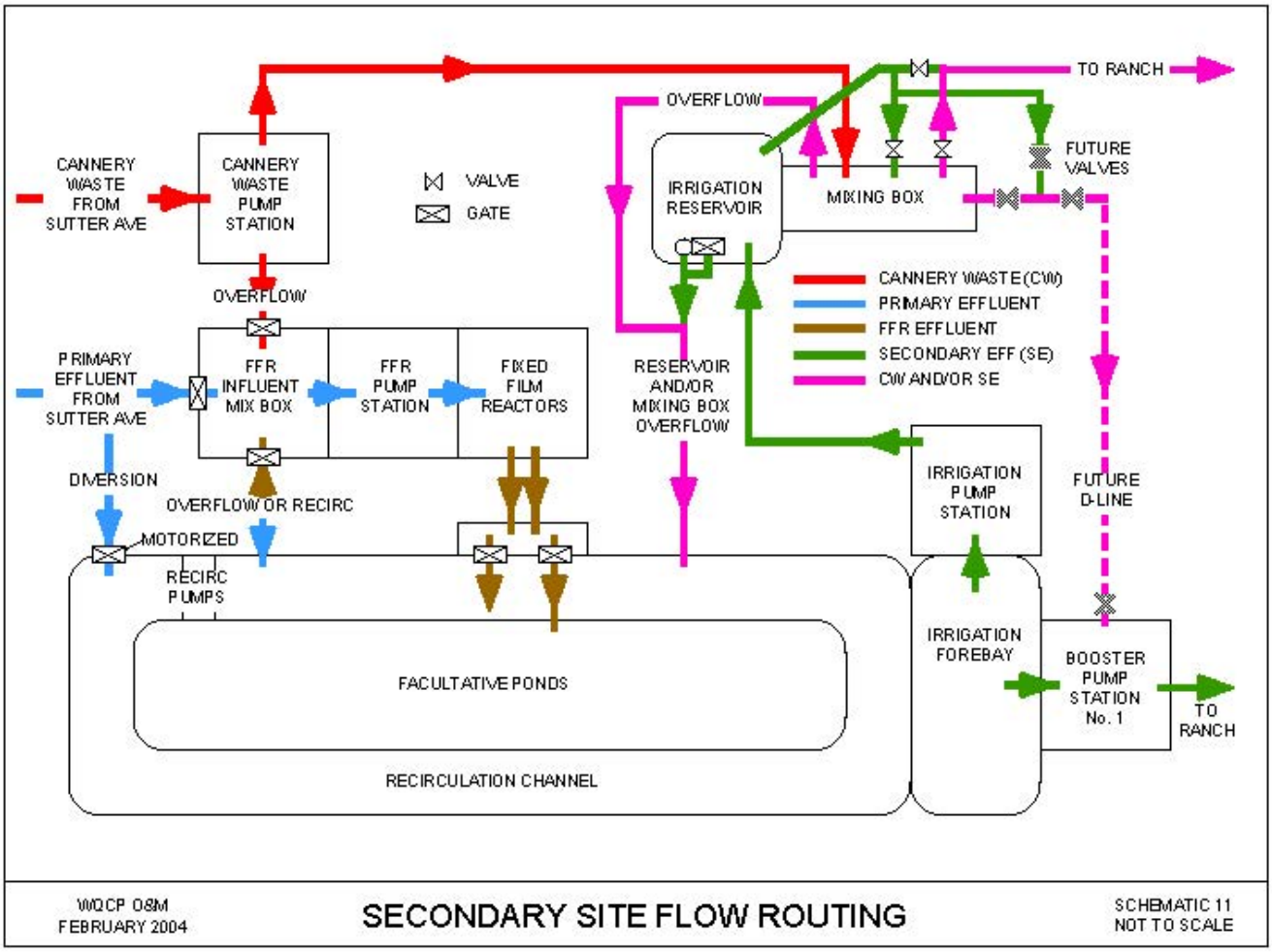

ATTACHMENT C- **PROCESS FLOW DIAGRAM 2**	**SECONDARY SITE FLOW ROUTING** CITY OF MODESTO WATER QUALITY CONTROL FACILITY STANISLAUS COUNTY	N W E S

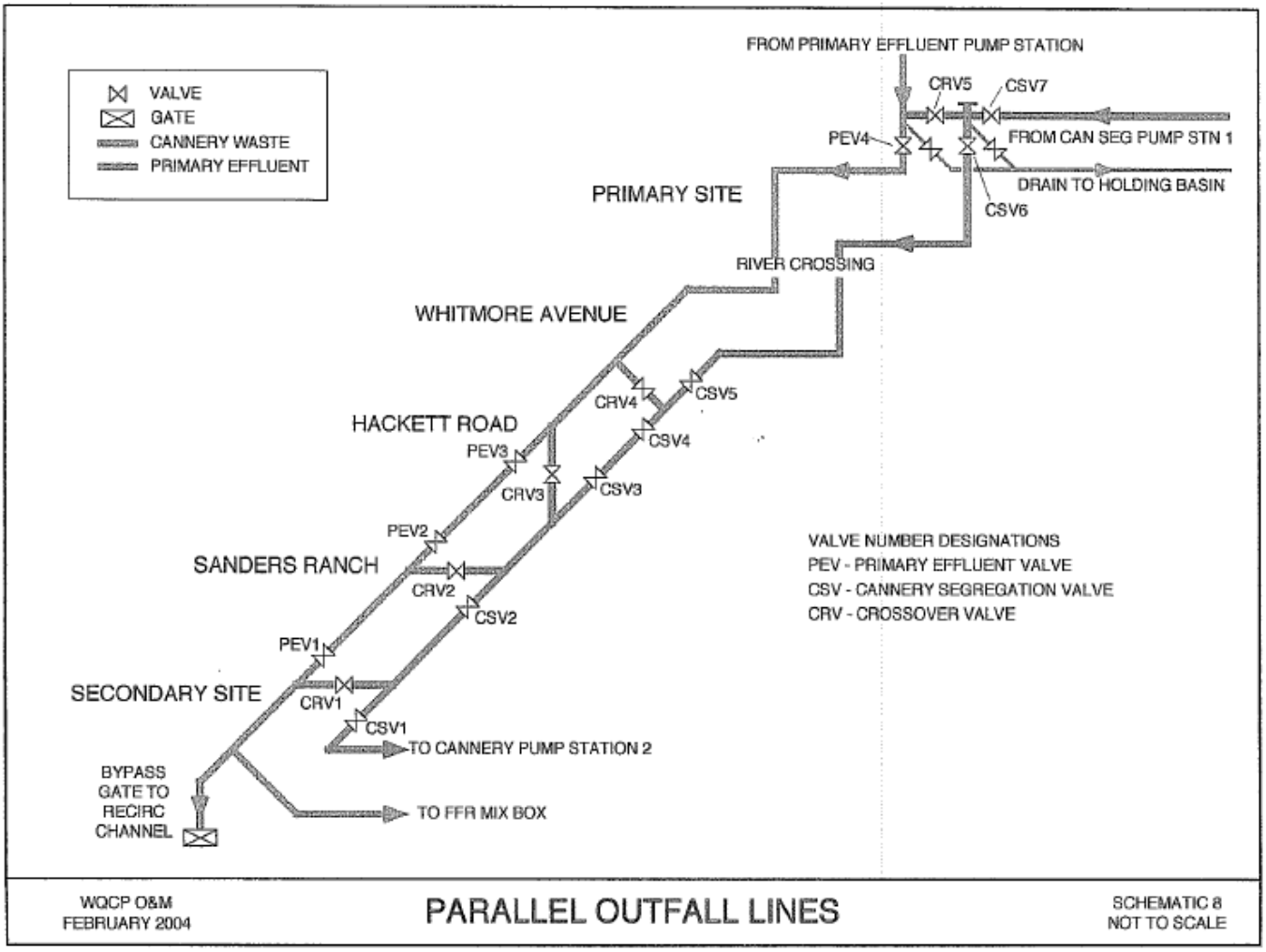

ATTACHMENT C- PROCESS FLOW DIAGRAM 3	PARALLEL OUTFALL LINES CITY OF MODESTO WATER QUALITY CONTROL FACILITY STANISLAUS COUNTY	N W E S

ATTACHMENT C- PROCESS FLOW DIAGRAM 4 - PHASE 1A/BNR - TERTIARY TREATMENT FACILITY

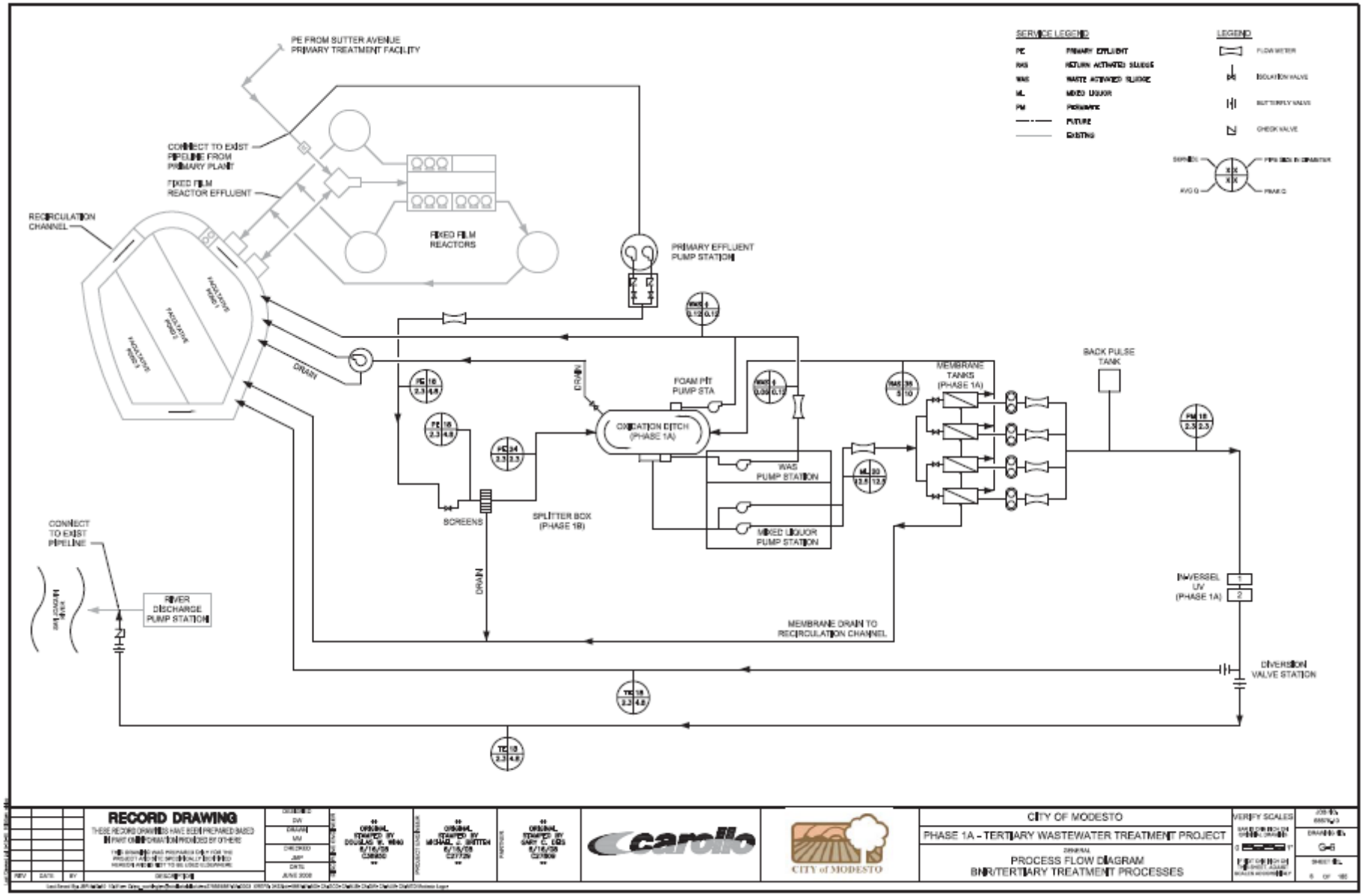

ATTACHMENT C- PROCESS FLOW DIAGRAM 5 - PHASE 2A/BNR - TERTIARY TREATMENT FACILITY

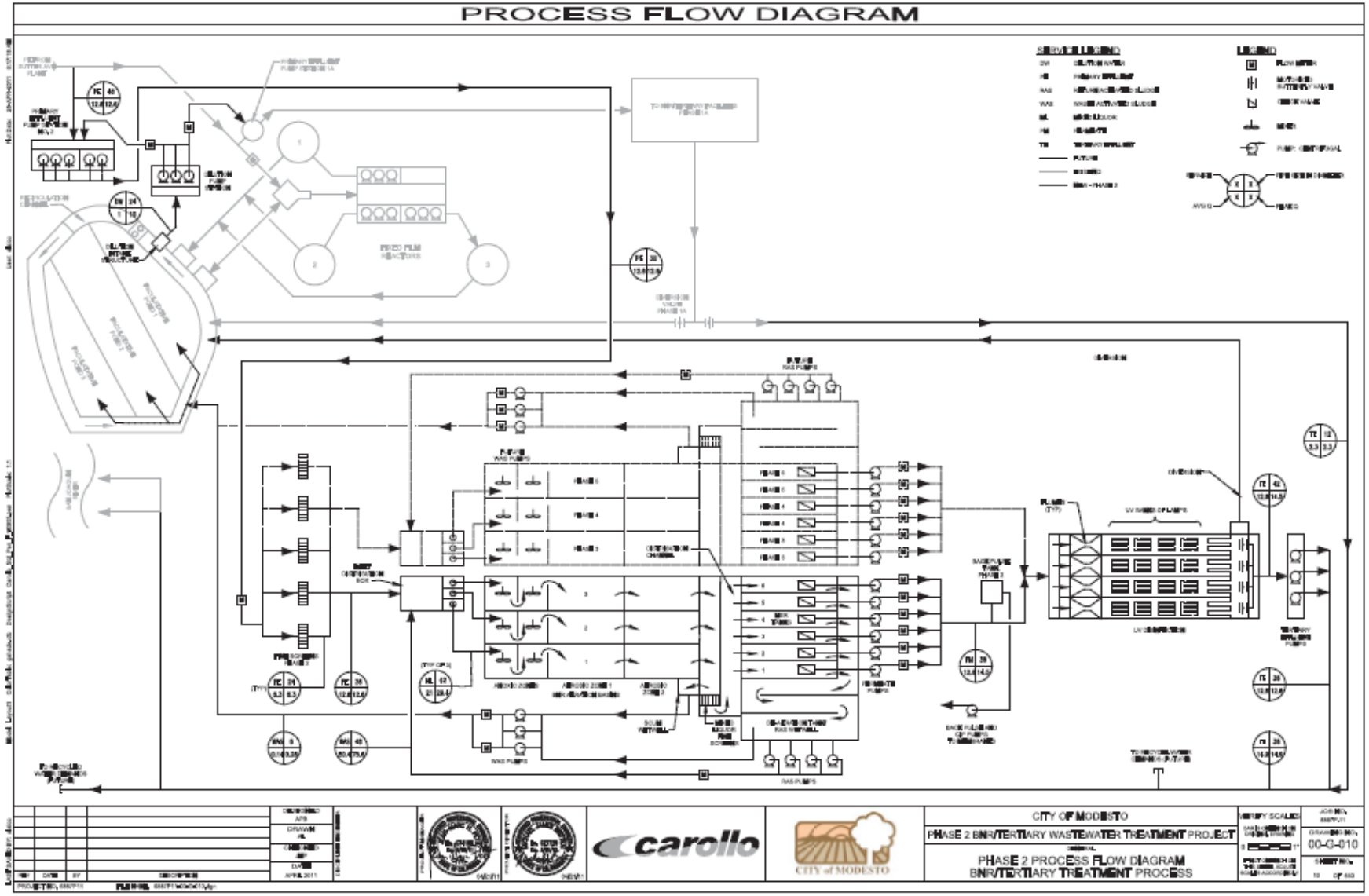

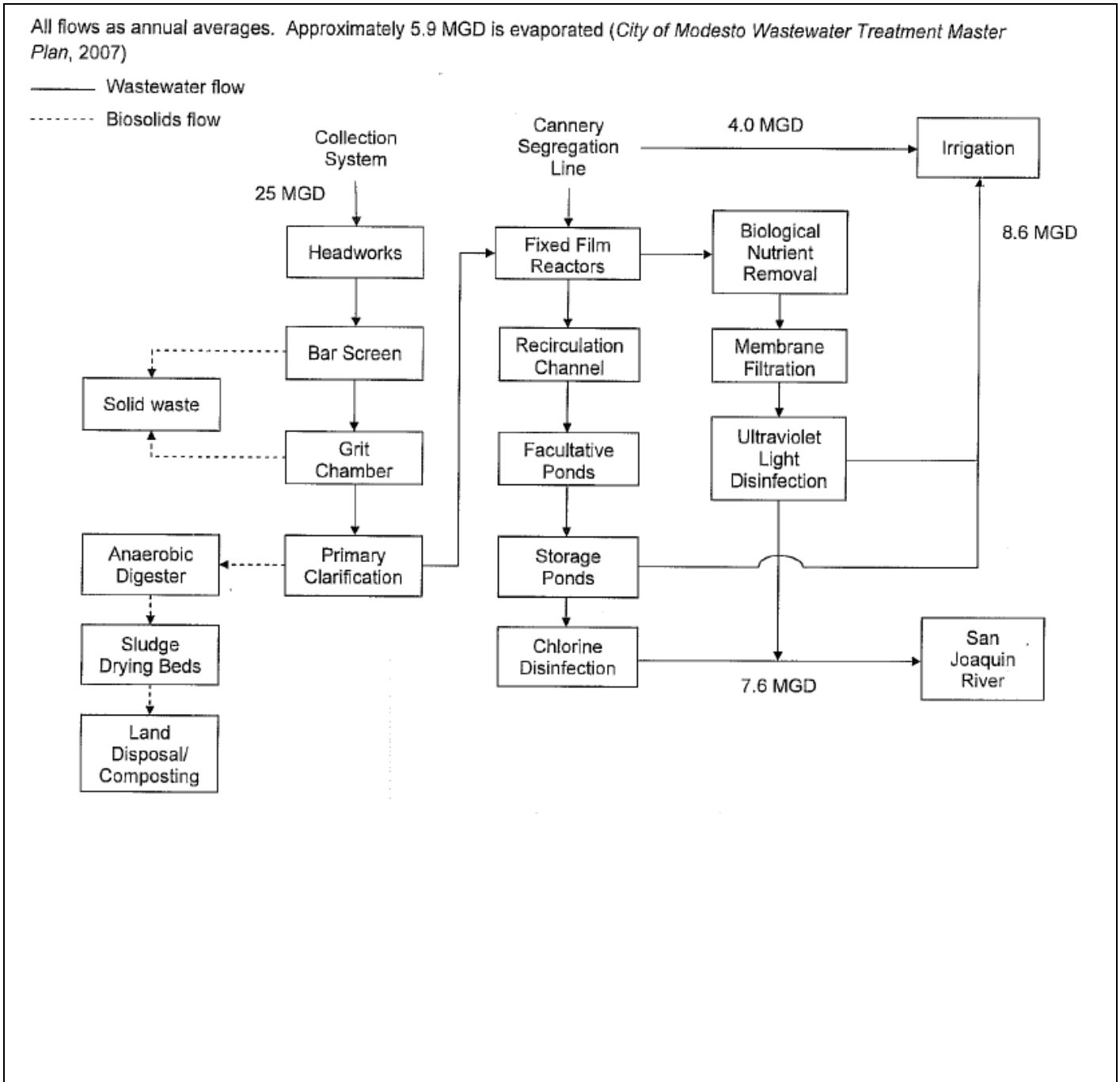

ATTACHMENT C- PROCESS FLOW DIAGRAM 6	CITY OF MODESTO WASTEWATER TRAETMENT MASTER PLAN CITY OF MODESTO WATER QUALITY CONTROL FACILITY STANISLAUS COUNTY	N W E S

ATTACHMENT D – STANDARD PROVISIONS

I. STANDARD PROVISIONS – PERMIT COMPLIANCE

A. Duty to Comply

1. The Discharger must comply with all of the conditions of this Order. Any noncompliance constitutes a violation of the Clean Water Act (CWA) and the California Water Code (CWC) and is grounds for enforcement action, for permit termination, revocation and reissuance, or modification; or denial of a permit renewal application. (40 CFR 122.41(a).)

2. The Discharger shall comply with effluent standards or prohibitions established under section 307(a) of the CWA for toxic pollutants and with standards for sewage sludge use or disposal established under section 405(d) of the CWA within the time provided in the regulations that establish these standards or prohibitions, even if this Order has not yet been modified to incorporate the requirement. (40 CFR 122.41(a)(1).)

B. Need to Halt or Reduce Activity Not a Defense

It shall not be a defense for a Discharger in an enforcement action that it would have been necessary to halt or reduce the permitted activity in order to maintain compliance with the conditions of this Order. (40 CFR 122.41(c))

C. Duty to Mitigate

The Discharger shall take all reasonable steps to minimize or prevent any discharge or sludge use or disposal in violation of this Order that has a reasonable likelihood of adversely affecting human health or the environment. (40 CFR 122.41(d))

D. Proper Operation and Maintenance

The Discharger shall at all times properly operate and maintain all facilities and systems of treatment and control (and related appurtenances) which are installed or used by the Discharger to achieve compliance with the conditions of this Order. Proper operation and maintenance also includes adequate laboratory controls and appropriate quality assurance procedures. This provision requires the operation of backup or auxiliary facilities or similar systems that are installed by a Discharger only when necessary to achieve compliance with the conditions of this Order. (40 CFR 122.41(e).)

E. Property Rights

1. This Order does not convey any property rights of any sort or any exclusive privileges. (40 CFR 122.41(g))

2. The issuance of this Order does not authorize any injury to persons or property or invasion of other private rights, or any infringement of state or local law or regulations. (40 CFR 122.5(c))

F. Inspection and Entry

The Discharger shall allow the Regional Water Board, State Water Board, United States Environmental Protection Agency (USEPA), and/or their authorized representatives (including an authorized contractor acting as their representative), upon the presentation of credentials and other documents, as may be required by law, to (40 CFR 122.41(i); CWC section 13383):

1. Enter upon the Discharger's premises where a regulated facility or activity is located or conducted, or where records are kept under the conditions of this Order (40 CFR 122.41(i)(1));

2. Have access to and copy, at reasonable times, any records that must be kept under the conditions of this Order (40 CFR 122.41(i)(2));

3. Inspect and photograph, at reasonable times, any facilities, equipment (including monitoring and control equipment), practices, or operations regulated or required under this Order (40 CFR 122.41(i)(3)); and

4. Sample or monitor, at reasonable times, for the purposes of assuring Order compliance or as otherwise authorized by the CWA or the CWC, any substances or parameters at any location. (40 CFR 122.41(i)(4))

G. Bypass

1. Definitions

   a. “Bypass” means the intentional diversion of waste streams from any portion of a treatment facility. (40 CFR 122.41(m)(1)(i))

   b. “Severe property damage” means substantial physical damage to property, damage to the treatment facilities, which causes them to become inoperable, or substantial and permanent loss of natural resources that can reasonably be expected to occur in the absence of a bypass. Severe property damage does not mean economic loss caused by delays in production. (40 CFR 122.41(m)(1)(ii))

2. Bypass not exceeding limitations. The Discharger may allow any bypass to occur which does not cause exceedances of effluent limitations, but only if it is for essential maintenance to assure efficient operation. These bypasses are not subject to the provisions listed in Standard Provisions – Permit Compliance I.G.3, I.G.4, and I.G.5 below. (40 CFR 122.41(m)(2))

3. Prohibition of bypass. Bypass is prohibited, and the Regional Water Board may take enforcement action against a Discharger for bypass, unless (40 CFR 122.41(m)(4)(i)):

a. Bypass was unavoidable to prevent loss of life, personal injury, or severe property damage (40 CFR 122.41(m)(4)(i)(A));

b. There were no feasible alternatives to the bypass, such as the use of auxiliary treatment facilities, retention of untreated wastes, or maintenance during normal periods of equipment downtime. This condition is not satisfied if adequate back-up equipment should have been installed in the exercise of reasonable engineering judgment to prevent a bypass that occurred during normal periods of equipment downtime or preventive maintenance (40 CFR 122.41(m)(4)(i)(B)); and

c. The Discharger submitted notice to the Regional Water Board as required under Standard Provisions – Permit Compliance I.G.5 below. (40 CFR 122.41(m)(4)(i)(C))

4. The Regional Water Board may approve an anticipated bypass, after considering its adverse effects, if the Regional Water Board determines that it will meet the three conditions listed in Standard Provisions – Permit Compliance I.G.3 above. (40 CFR 122.41(m)(4)(ii))

5. Notice

a. Anticipated bypass. If the Discharger knows in advance of the need for a bypass, it shall submit a notice, if possible at least 10 days before the date of the bypass. (40 CFR 122.41(m)(3)(i))

b. Unanticipated bypass. The Discharger shall submit notice of an unanticipated bypass as required in Standard Provisions - Reporting V.E below (24-hour notice). (40 CFR 122.41(m)(3)(ii))

H. Upset

Upset means an exceptional incident in which there is unintentional and temporary noncompliance with technology based permit effluent limitations because of factors beyond the reasonable control of the Discharger. An upset does not include noncompliance to the extent caused by operational error, improperly designed treatment facilities, inadequate treatment facilities, lack of preventive maintenance, or careless or improper operation. (40 CFR 122.41(n)(1))

1. Effect of an upset. An upset constitutes an affirmative defense to an action brought for noncompliance with such technology based permit effluent limitations if the requirements of Standard Provisions – Permit Compliance I.H.2 below are met. No determination made during administrative review of claims that noncompliance

was caused by upset, and before an action for noncompliance, is final administrative action subject to judicial review. (40 CFR 122.41(n)(2))

2. Conditions necessary for a demonstration of upset. A Discharger who wishes to establish the affirmative defense of upset shall demonstrate, through properly signed, contemporaneous operating logs or other relevant evidence that (40 CFR 122.41(n)(3)):

a. An upset occurred and that the Discharger can identify the cause(s) of the upset (40 CFR 122.41(n)(3)(i));

b. The permitted facility was, at the time, being properly operated (40 CFR 122.41(n)(3)(ii));

c. The Discharger submitted notice of the upset as required in Standard Provisions – Reporting V.E.2.b below (24-hour notice) (40 CFR 122.41(n)(3)(iii)); and

d. The Discharger complied with any remedial measures required under Standard Provisions – Permit Compliance I.C above. (40 CFR 122.41(n)(3)(iv))

3. Burden of proof. In any enforcement proceeding, the Discharger seeking to establish the occurrence of an upset has the burden of proof. (40 CFR 122.41(n)(4))

II. STANDARD PROVISIONS – PERMIT ACTION

A. General

This Order may be modified, revoked and reissued, or terminated for cause. The filing of a request by the Discharger for modification, revocation and reissuance, or termination, or a notification of planned changes or anticipated noncompliance does not stay any Order condition. (40 CFR 122.41(f))

B. Duty to Reapply

If the Discharger wishes to continue an activity regulated by this Order after the expiration date of this Order, the Discharger must apply for and obtain a new permit. (40 CFR 122.41(b))

C. Transfers

This Order is not transferable to any person except after notice to the Regional Water Board. The Regional Water Board may require modification or revocation and reissuance of the Order to change the name of the Discharger and incorporate such other requirements as may be necessary under the CWA and the CWC. (40 CFR 122.41(l)(3) and 122.61)

III. STANDARD PROVISIONS – MONITORING

A. Samples and measurements taken for the purpose of monitoring shall be representative of the monitored activity. (40 CFR 122.41(j)(1))

B. Monitoring results must be conducted according to test procedures under 40 CFR Part 136 or, in the case of sludge use or disposal, approved under 40 CFR Part 136 unless otherwise specified in 40 CFR Part 503 unless other test procedures have been specified in this Order. (40 CFR 122.41(j)(4) and 122.44(i)(1)(iv))

IV. STANDARD PROVISIONS – RECORDS

A. Except for records of monitoring information required by this Order related to the Discharger's sewage sludge use and disposal activities, which shall be retained for a period of at least 5 years (or longer as required by 40 CFR Part 503), the Discharger shall retain records of all monitoring information, including all calibration and maintenance records and all original strip chart recordings for continuous monitoring instrumentation, copies of all reports required by this Order, and records of all data used to complete the application for this Order, for a period of at least three (3) years from the date of the sample, measurement, report or application. This period may be extended by request of the Regional Water Board Executive Officer at any time. (40 CFR 122.41(j)(2))

B. Records of monitoring information shall include:

1. The date, exact place, and time of sampling or measurements (40 CFR 122.41(j)(3)(i));

2. The individual(s) who performed the sampling or measurements (40 CFR 122.41(j)(3)(ii));

3. The date(s) analyses were performed (40 CFR 122.41(j)(3)(iii));

4. The individual(s) who performed the analyses (40 CFR 122.41(j)(3)(iv));

5. The analytical techniques or methods used (40 CFR 122.41(j)(3)(v)); and

6. The results of such analyses. (40 CFR 122.41(j)(3)(vi))

C. Claims of confidentiality for the following information will be denied (40 CFR 122.7(b)):

1. The name and address of any permit applicant or Discharger (40 CFR 122.7(b)(1)); and

2. Permit applications and attachments, permits and effluent data. (40 CFR 122.7(b)(2))

V. STANDARD PROVISIONS – REPORTING

A. Duty to Provide Information

The Discharger shall furnish to the Regional Water Board, State Water Board, or USEPA within a reasonable time, any information which the Regional Water Board, State Water Board, or USEPA may request to determine whether cause exists for modifying, revoking and reissuing, or terminating this Order or to determine compliance with this Order. Upon request, the Discharger shall also furnish to the Regional Water Board, State Water Board, or USEPA copies of records required to be kept by this Order. (40 CFR 122.41(h); Wat. Code, § 13267)

B. Signatory and Certification Requirements

1. All applications, reports, or information submitted to the Regional Water Board, State Water Board, and/or USEPA shall be signed and certified in accordance with Standard Provisions – Reporting V.B.2, V.B.3, V.B.4, and V.B.5 below. (40 CFR 122.41(k))

2. All permit applications shall be signed by either a principal executive officer or ranking elected official. For purposes of this provision, a principal executive officer of a federal agency includes: (i) the chief executive officer of the agency, or (ii) a senior executive officer having responsibility for the overall operations of a principal geographic unit of the agency (e.g., Regional Administrators of USEPA). (40 CFR 122.22(a)(3))

3. All reports required by this Order and other information requested by the Regional Water Board, State Water Board, or USEPA shall be signed by a person described in Standard Provisions – Reporting V.B.2 above, or by a duly authorized representative of that person. A person is a duly authorized representative only if:

a. The authorization is made in writing by a person described in Standard Provisions – Reporting V.B.2 above (40 CFR 122.22(b)(1));

b. The authorization specifies either an individual or a position having responsibility for the overall operation of the regulated facility or activity such as the position of plant manager, operator of a well or a well field, superintendent, position of equivalent responsibility, or an individual or position having overall responsibility for environmental matters for the company. (A duly authorized representative may thus be either a named individual or any individual occupying a named position.) (40 CFR 122.22(b)(2)); and

c. The written authorization is submitted to the Regional Water Board and State Water Board. (40 CFR 122.22(b)(3))

4. If an authorization under Standard Provisions – Reporting V.B.3 above is no longer accurate because a different individual or position has responsibility for the overall operation of the facility, a new authorization satisfying the requirements of

Standard Provisions – Reporting V.B.3 above must be submitted to the Regional Water Board and State Water Board prior to or together with any reports, information, or applications, to be signed by an authorized representative. (40 CFR 122.22(c))

5. Any person signing a document under Standard Provisions – Reporting V.B.2 or V.B.3 above shall make the following certification:

"*I certify under penalty of law that this document and all attachments were prepared under my direction or supervision in accordance with a system designed to assure that qualified personnel properly gather and evaluate the information submitted. Based on my inquiry of the person or persons who manage the system or those persons directly responsible for gathering the information, the information submitted is, to the best of my knowledge and belief, true, accurate, and complete. I am aware that there are significant penalties for submitting false information, including the possibility of fine and imprisonment for knowing violations.*" (40 CFR 122.22(d))

C. Monitoring Reports

1. Monitoring results shall be reported at the intervals specified in the Monitoring and Reporting Program (Attachment E) in this Order. (40 CFR 122.22(l)(4))

2. Monitoring results must be reported on a Discharge Monitoring Report (DMR) form or forms provided or specified by the Regional Water Board or State Water Board for reporting results of monitoring of sludge use or disposal practices. (40 CFR 122.41(l)(4)(i))

3. If the Discharger monitors any pollutant more frequently than required by this Order using test procedures approved under 40 CFR Part 136 or, in the case of sludge use or disposal, approved under 40 CFR Part 136 unless otherwise specified in 40 CFR Part 503, or as specified in this Order, the results of this monitoring shall be included in the calculation and reporting of the data submitted in the DMR or sludge reporting form specified by the Regional Water Board. (40 CFR 122.41(l)(4)(ii))

4. Calculations for all limitations, which require averaging of measurements, shall utilize an arithmetic mean unless otherwise specified in this Order. (40 CFR 122.41(l)(4)(iii))

D. Compliance Schedules

Reports of compliance or noncompliance with, or any progress reports on, interim and final requirements contained in any compliance schedule of this Order, shall be submitted no later than 14 days following each schedule date. (40 CFR 122.41(l)(5))

E. Twenty-Four Hour Reporting

1. The Discharger shall notify the Office of Emergency Services of any noncompliance that may endanger health or the environment within two (2) hours from the time the Discharger becomes aware of the circumstances. The Discharger shall notify the Central Valley Water Board of the noncompliance by telephone or fax within 24 hours from the time the Discharger becomes aware of the circumstances. A written submission shall also be provided to the Central Valley Water Board within five (5) days of the time the Discharger becomes aware of the circumstances. The written submission shall contain a description of the noncompliance and its cause; the period of noncompliance, including exact dates and times, and if the noncompliance has not been corrected, the anticipated time it is expected to continue; and steps taken or planned to reduce, eliminate, and prevent reoccurrence of the noncompliance. (40 CFR 122.41(l)(6)(i))

2. The following shall be included as information that must be reported within 24 hours under this paragraph (40 CFR 122.41(l)(6)(ii)):

   a. Any unanticipated bypass that exceeds any effluent limitation in this Order. (40 CFR 122.41(l)(6)(ii)(A))

   b. Any upset that exceeds any effluent limitation in this Order. (40 CFR 122.41(l)(6)(ii)(B))

3. The Regional Water Board may waive the above-required written report under this provision on a case-by-case basis if an oral report has been received within 24 hours. (40 CFR 122.41(l)(6)(iii))

F. Planned Changes

The Discharger shall give notice to the Central Valley Water Board as soon as possible of any planned physical alterations or additions to the permitted facility. Notice is required under this provision only when (40 CFR 122.41(l)(1)):

1. The alteration or addition to a permitted facility may meet one of the criteria for determining whether a facility is a new source in 40 CFR 122.29(b) (40 CFR 122.41(l)(1)(i)); or

2. The alteration or addition could significantly change the nature or increase the quantity of pollutants discharged. This notification applies to pollutants that are not subject to effluent limitations in this Order. (40 CFR 122.41(l)(1)(ii))

3. The alteration or addition results in a significant change in the Discharger's sludge use or disposal practices, and such alteration, addition, or change may justify the application of permit conditions that are different from or absent in the existing permit, including notification of additional use or disposal sites not reported during the permit application process or not reported pursuant to an approved land application plan. (40 CFR 122.41(l)(1)(iii))

G. Anticipated Noncompliance

The Discharger shall give advance notice to the Central Valley Water Board or State Water Board of any planned changes in the permitted facility or activity that may result in noncompliance with General Order requirements. (40 CFR 122.41(l)(2))

H. Other Noncompliance

The Discharger shall report all instances of noncompliance not reported under Standard Provisions – Reporting V.C, V.D, and V.E above at the time monitoring reports are submitted. The reports shall contain the information listed in Standard Provision – Reporting V.E above. (40 CFR 122.41(l)(7))

I. Other Information

When the Discharger becomes aware that it failed to submit any relevant facts in a permit application, or submitted incorrect information in a permit application or in any report to the Central Valley Water Board, State Water Board, or USEPA, the Discharger shall promptly submit such facts or information. (40 CFR 122.41(l)(8))

VI. STANDARD PROVISIONS – ENFORCEMENT

A. The Central Valley Water Board is authorized to enforce the terms of this permit under several provisions of the CWC, including, but not limited to, sections 13385, 13386, and 13387.

VII. ADDITIONAL PROVISIONS – NOTIFICATION LEVELS

A. Publicly-Owned Treatment Works (POTWs)

All POTWs shall provide adequate notice to the Central Valley Water Board of the following (40 CFR 122.42(b)):

1. Any new introduction of pollutants into the POTW from an indirect discharger that would be subject to sections 301 or 306 of the CWA if it were directly discharging those pollutants (40 CFR 122.42(b)(1)); and

2. Any substantial change in the volume or character of pollutants being introduced into that POTW by a source introducing pollutants into the POTW at the time of adoption of the Order. (40 CFR 122.42(b)(2))

3. Adequate notice shall include information on the quality and quantity of effluent introduced into the POTW as well as any anticipated impact of the change on the quantity or quality of effluent to be discharged from the POTW. (40 CFR 122.42(b)(3))

ATTACHMENT E – MONITORING AND REPORTING PROGRAM

Table of Contents

I. General Monitoring Provisions E-2
II. Monitoring Locations E-3
III. Influent Monitoring Requirements E-4
  A. Monitoring Location INF-001 ..... E-4
IV. Effluent Monitoring Requirements E-5
  A. Monitoring Location EFF-001A (Secondary Effluent) E-5
  B. Monitoring Location EFF-001B (Tertiary Effluent) E-7
V. Whole Effluent Toxicity Testing Requirements E-8
VI. Land Discharge Monitoring Requirements- Not Applicable. E-12
VII. Reclamation Monitoring Requirements – Not Applicable E-12
VIII. Receiving Water Monitoring Requirements – Surface Water E-12
  A. Monitoring Locations RSW-001, RSW-002, RSW-003, and RSW-004 ..... E-12
IX. Other Monitoring Requirements E-13
  A. Biosolids– Not Applicable E-13
  B. Municipal Water Supply E-14
  C. Ultraviolet Light (UV) Disinfection System E-14
X. Reporting Requirements E-15
  A. General Monitoring and Reporting Requirements E-15
  B. Self Monitoring Reports (SMRs) E-16
  C. Discharge Monitoring Reports (DMRs) E-19
  D. Other Reports E-20

List of Tables

Table E-1. Monitoring Station Locations E-3
Table E-2. Influent Monitoring E-4
Table E-3a. Effluent Monitoring – EFF-001A Secondary Effluent E-5
Table E-3b. Effluent Monitoring – EFF-001B Tertiary Effluent E-7
Table E-4. Chronic Toxicity Testing Dilution Series E-10
Table E-5. Receiving Water Monitoring Requirements E-12
Table E-6. Municipal Water Supply Monitoring Requirements E-14
Table E-7. Ultraviolet Light Disinfection System Monitoring E-14
Table E-8. Monitoring Periods and Reporting Schedule E-16
Table E-9. Reporting Requirements for Special Provisions Progress Reports E-20

ATTACHMENT E – MONITORING AND REPORTING PROGRAM

Title 40 of the Code of Federal Regulations (CFR), section 122.48 (40 CFR 122.48) requires that all NPDES permits specify monitoring and reporting requirements. California Water Code (CWC) sections 13267 and 13383 also authorize the Central Valley Regional Water Quality Control Board (Central Valley Water Board) to require technical and monitoring reports. This Monitoring and Reporting Program establishes monitoring and reporting requirements, which implement the federal and California regulations.

I. GENERAL MONITORING PROVISIONS

A. Samples and measurements taken as required herein shall be representative of the volume and nature of the monitored discharge. All samples shall be taken at the monitoring locations specified below and, unless otherwise specified, before the monitored flow joins or is diluted by any other waste stream, body of water, or substance. Monitoring locations shall not be changed without notification to and the approval of this Central Valley Water Board.

B. Effluent samples shall be taken downstream of the last addition of wastes to the treatment or discharge works where a representative sample may be obtained prior to mixing with the receiving waters. Samples shall be collected at such a point and in such a manner to ensure a representative sample of the discharge.

C. Chemical, bacteriological, and bioassay analyses of any material required by this Order shall be conducted by a laboratory certified for such analyses by the Department of Public Health (DPH). Laboratories that perform sample analyses must be identified in all monitoring reports submitted to the Central Valley Water Board. In the event a certified laboratory is not available to the Discharger for any onsite field measurements such as pH, DO, turbidity, temperature, and residual chlorine, such analyses performed by a noncertified laboratory will be accepted provided <u>that the analysis is in accordance with 40 CFR 136 or an USEPA approved alternative test procedure, and</u> a Quality Assurance-Quality Control Program is instituted by the laboratory. A manual containing the steps followed in this program for any onsite field measurements such as pH, DO, turbidity, temperature, and residual chlorine must be kept onsite in the treatment facility laboratory and shall be available for inspection by Central Valley Water Board staff. The Discharger must demonstrate sufficient capability (qualified and trained employees, properly calibrated and maintained field instruments, etc.) to adequately perform these field measurements. The Quality Assurance-Quality Control Program must conform to USEPA guidelines or to procedures approved by the Central Valley Water Board.

D. Appropriate flow measurement devices and methods consistent with accepted scientific practices shall be selected and used to ensure the accuracy and reliability of measurements of the volume of monitored discharges. All monitoring instruments and devices used by the Discharger to fulfill the prescribed monitoring program shall be properly maintained and calibrated as necessary, at least yearly, to ensure their

continued accuracy. All flow measurement devices shall be calibrated at least once per year to ensure continued accuracy of the devices.

E. Monitoring results, including noncompliance, shall be reported at intervals and in a manner specified in this Monitoring and Reporting Program.

II. MONITORING LOCATIONS

The Discharger shall establish the following monitoring locations to demonstrate compliance with the effluent limitations, discharge specifications, and other requirements in this Order:

Table E-1. Monitoring Station Locations

Discharge Point Name	Monitoring Location Name	Monitoring Location Description
--	INF-001	**Influent to Primary Treatment Facility** 37º, 36', 37" N 121º, 00', 34" W
001	EFF-001A	**Effluent from Secondary Treatment Facility** (See Attach B, Map B-2)
001	EFF-001B	**Effluent from Tertiary-level Treatment Facility** (See Attach B, Map B-2)
--	RSW-001	**SJR Upstream at West Main Bridge** 37º, 29', 38" N 121º, 04', 50" W (See Attach B, Map B-2)
--	RSW-002	**SJR Downstream approximately 500 feet from Discharge Point 001**
--	RSW-003	**SJR Downstream approximately one mile from Discharge Point 001**
--	RSW-004	**SJR Downstream at Laird Park** 37º, 33', 43" N 121º, 09', 08" W (See Attach B, Map B-2)
--	UVS-001	**Influent to the Phase 1A Ultraviolet Light Disinfection System following the permeate pumps.**
--	UVS-002	**Influent to the Phase 2 Ultraviolet Light Disinfection System following the permeate pumps.**
--	SPL-001	**Municipal Water Supply**

III. INFLUENT MONITORING REQUIREMENTS

A. Monitoring Location INF-001

5. The Discharger shall monitor the influent to the Primary Treatment Facility at INF-001 as follows:

Table E-2. Influent Monitoring

Parameter	Units	Sample Type	Minimum Sampling Frequency	Required Analytical Test Method
Flow	MGD	Meter	Continuous	[1]
pH	Standard Units	Grab[2]	1/Week	[1]
BOD 5-day @ 20°C	mg/L	24-hr Composite [3]	1/day	[1]
Electrical Conductivity @ 25°C	µmhos/cm	Grab[2]	1/week	
Total Suspended Solids	mg/L	24-hr Composite [3]	1/day	[1]

[1] Pollutants shall be analyzed using the analytical methods described in 40 CFR Part 136 or an EPA approved Alternate Testing Procedure; where no methods are specified for a given pollutant that meet a specific reporting limit or method performance standard, an alternate method shall be approved by the Central Valley Water Board ~~or the State Water Board~~.

[2] Grab samples shall not be collected at the same time each day to get a complete representation of variations in the influent.

[3] 24-hour flow proportional composite.

IV. EFFLUENT MONITORING REQUIREMENTS

A. Monitoring Location EFF-001A (Secondary Effluent)

1. While discharging from the secondary treatment facility, the Discharger shall monitor secondary treated effluent at EFF-001A as follows. If there is no secondary discharge, the SMRs must indicate that no secondary discharge occurred during that period. If more than one analytical test method is listed for a given parameter, the Discharger must select from the listed methods and corresponding Minimum Level:

Table E-3a. Effluent Monitoring – EFF-001A Secondary Effluent

Parameter	Units	Sample Type	Minimum Sampling Frequency	Required Analytical Test Method
Flow	mgd	Meter	Continuous	[1]
Dissolved Oxygen	mg/L	Meter	Continuous	[1]
pH	Standard Units	Meter	Continuous	[1]
Chlorine, Total Residual or Dechlorinating Agent Residual	mg/L	Meter	Continuous	[1,7]
~~Dechlorinating Agent Residual~~	~~mg/L~~	~~Meter~~	~~Continuous~~	~~[1]~~
Temperature	°C	Meter	Continuous	[1]
River Flow[12]	mgd	Meter	Continuous	
Flow Ratio[12]	mgd	Calculate	1/day	
Biochemical Oxygen Demand (BOD) (5-day @ 20 Deg. C)	mg/L	24-hr Composite[2]	1/day	[1]
	lbs/day	Calculate	1/day	--
	% Removal	Calculate	1/Month	--
Total Suspended Solids	mg/L	24-hr Composite[2]	1/day	[1]
	lbs/day	Calculate	1/day	--
	% Removal	Calculate	1/Month	--
Total Coliform Organisms	MPN/100 mL	Grab	1/day[12]	[1]
Ammonia Nitrogen, Total (as N)	mg/L	Grab	1/Week [3,5]	[1]
Ammonia Interim Maximum Daily Effluent Limit	mg/L	Calculate[13]	1/Week	
Settleable Solids	ml/L	Grab	1/Week	[1]
Turbidity	NTU	Grab	1/Week	[1]
Electrical Conductivity @ 25°C	µmhos/cm	24-hr Composite[2]	2/Month	[1]
Aluminum, Total Recoverable	µg/L	24-hr Composite[2]	1/Month	[1, 4]
Boron	µg/L	24-hr Composite[2]	1/Month	[1]
Carbon Tetrachloride	µg/L	Grab	1/Month	[1, 6]
Chloride	µg/L	24-hr Composite[2]	1/Month	[1]
Copper, Total Recoverable	µg/L	24-hr Composite[2]	1/Month	[1, 6]
Dibromochloromethane	µg/L	Grab	1/Month	[1, 6]
Dichlorobromomethane	µg/L	Grab	1/Month	[1, 6]
Hardness (as $CaCO_3$)	mg/L	24-hr Composite[2]	1/Month[8]	[1]
Iron, Total Recoverable	µg/L	24-hr Composite[2]	1/Month	[1]
Manganese, Total Recoverable	µg/L	24-hr Composite[2]	1/Month	[1]

Parameter	Units	Sample Type	Minimum Sampling Frequency	Required Analytical Test Method
Mercury (methyl)	µg/L	Grab	1/Month	[9]
Mercury, Total Recoverable	µg/L	Grab	1/Month	[9]
Molybdenum, Total Recoverable	µg/L	24-hr Composite[2]	1/Month	[1]
Nitrate + Nitrite, Total (as N)	mg/L	Grab~~Calculate~~[14]	1/Month	
Nitrate Nitrogen, Total (as N)	mg/L	Calculate[14]~~Grab~~	1/Month[10]	[1]
Nitrite Nitrogen, Total (as N)	mg/L	Grab	1/Month[10]	[1]
Phosphorus, Total (as P)	mg/L	24-hr Composite[2]	1/Month	[1]
Total Dissolved Solids	mg/L	24-hr Composite[2]	1/Month	[1]
Total Organic Carbon	µg/L	24-hr Composite[2]	1/Month	[1]
Chlorpyrifos	µg/L	Grab	1/Year	EPA 8141A or EPA 625M
Diazinon	µg/L	Grab	1/Year	EPA 8141A or EPA 625M
Priority Pollutants and Other Constituents of Concern (See Att.I)	See Att. I	See Att. I	See Att. I	See Att. I
Whole Effluent Toxicity (see Section V. below)	--	--	--	--

[1] Pollutants shall be analyzed using the analytical methods described in 40 CFR Part 136 or an EPA approved Alternate Testing Procedure; where no methods are specified for a given pollutant that meet a specific reporting limit or method performance standard, an alternate method can be approved by the Central Valley Water Board.

[2] 24-hour flow proportional composite.

[3] pH and temperature shall be recorded at the time of ammonia sample collection.

[4] Compliance with the final effluent limitations for aluminum can be demonstrated using either total or acid-soluble (inductively coupled plasma/atomic emission spectrometry or inductively coupled plasma/mass spectrometry) analysis methods, as supported by USEPA's Ambient Water Quality Criteria for Aluminum document (EPA 440/5-86-008), or other standard methods that exclude aluminum silicate particles as approved by the Executive Officer.

[5] Concurrent with whole effluent toxicity monitoring.

[6] For priority pollutant constituents with effluent limitations, detection limits shall be below the effluent limitations. If the lowest minimum level (ML) published in Appendix 4 of the Policy for Implementation of Toxics Standards for Inland Surface Waters, Enclosed Bays, and Estuaries of California (State Implementation Plan or SIP) is not below the effluent limitation, the detection limit shall be the lowest ML. For priority pollutant constituents without effluent limitations, the detection limits shall be equal to or less than the lowest ML published in Appendix 4 of the SIP. Sampling and analysis of Bis (2-ethylhexyl) phthalate shall be conducted using ultra-clean techniques that eliminate the possibility of sample contamination.

[7] Total chlorine residual must be monitored with a method sensitive to and accurate at the permitted level of 0.01 mg/L. As allowed in Section VII.F of the Limitations and Discharge Specifications, effluent continuous monitoring analyzers for chlorine residual or dechlorination agent residual are appropriate methods for determining compliance with the total residual chlorine effluent limits.

[8] Hardness samples shall be collected concurrently with metals samples.

[9] Unfiltered methyl mercury and total mercury samples shall be taken using clean hands/dirty hands procedures, as described in U.S. EPA method 1669: Sampling Ambient Water for Trace Metals at EPA Water Quality Criteria Levels, for collection of equipment blanks (section 9.4.4.2), and shall be analyzed by U.S. EPA method 1630/1631 (Revision E) with a method detection limit of 0.02 ng/l for methyl mercury and 0.2 ng/l for total mercury.

[10] Monitoring for nitrite and nitrate shall be conducted concurrently.

[11] Samples for Total coliform organisms may be collected at any point following disinfection.

[12] Flow ratio is calculated as the average daily San Joaquin River flow rate (upstream of discharge) divided by the average daily effluent flow rate for the same day.
[13] Report applicable interim maximum daily effluent limitation for ammonia based on the pH at the time of ammonia sampling (see Table 7).
[14] This is the difference of Nitrate+Nitrite and nitrite.

B. Monitoring Location EFF-001B (Tertiary Effluent)

1. When discharging tertiary effluent, the Discharger shall monitor the tertiary effluent at EFF-001B as follows. If there is no tertiary discharge, the SMRs must indicate that no tertiary discharge occurred during that period. If more than one analytical test method is listed for a given parameter, the Discharger must select from the listed methods and corresponding Minimum Level:

Table E-3b. Effluent Monitoring – EFF-001B Tertiary Effluent

Parameter	Units	Sample Type	Minimum Sampling Frequency	Required Analytical Test Method
Effluent Flow	mgd	Meter	Continuous	[1]
Dissolved Oxygen	mg/L	Meter	Continuous	[1]
pH	Standard Units	Meter	Continuous	[1]
Temperature	°C	Meter	Continuous	[1]
Biochemical Oxygen Demand (BOD) (5-day @ 20 Deg. C)	mg/L	24-hr Composite[2]	1/day	[1]
	lbs/day	Calculate	1/day	--
	% Removal	Calculate	1/Month	--
Total Suspended Solids	mg/L	24-hr Composite[2]	1/day	[1]
	lbs/day	Calculate	1/day	--
	% Removal	Calculate	1/Month	--
Total Coliform Organisms	MPN/100 mL	Grab	1/day [10]	[1]
Ammonia, Total (as N)	mg/L	Grab	1/Week [3,5]	[1]
	lbs/day	Calculate	1/week	--
Nitrate + Nitrite, Total (as N)	mg/L	Grab	1/Week	[1]
Nitrate Nitrogen,, Total (as N)	mg/L	Calculate[11]	1/Week [9]	[1]
Nitrite Nitrogen,, Total (as N)	mg/L	Grab	1/Week [9]	[1]
Electrical Conductivity @ 25°C	µmhos/cm	24-hr Composite[2]	2/Month	[1]
Aluminum, Total Recoverable	µg/L	24-hr Composite[2]	1/Month	[1, 4]
Boron	µg/L	24-hr Composite[2]	1/Month	[1]
Chloride	µg/L	24-hr Composite[2]	1/Month	[1]
Copper, Total Recoverable	µg/L	24-hr Composite[2]	1/Month	[1, 6]
Hardness (as $CaCO_3$)	mg/L	24-hr Composite[2]	1/Month[7]	[1]
Mercury (methyl)	µg/L	Grab	1/Month	[8]
Mercury, Total Recoverable	µg/L	Grab	1/Month	[8]
Molybdenum, Total Recoverable	µg/L	24-hr Composite[2]	1/Month	[1]
Phosphorus, Total (as P)	mg/L	24-hr Composite[2]	1/Month	[1]
Total Dissolved Solids	mg/L	24-hr Composite[2]	1/Month	[1]
Iron, Total Recoverable	µg/L	24-hr Composite[2]	1/Quarter	[1]
Manganese, Total Recoverable	µg/L	24-hr Composite[2]	1/Quarter	[1]

Parameter	Units	Sample Type	Minimum Sampling Frequency	Required Analytical Test Method
Chlorpyrifos	µg/L	Grab	1/Year	EPA 8141A or EPA 625M
Diazinon	µg/L	Grab	1/Year	EPA 8141A or EPA 625M
Priority Pollutants and Other Constituents of Concern (See Att. I)	See Att. I	See Att. I	See Att. I	See Att. I
Whole Effluent Toxicity (see Section V. below)	--	--	--	--

[1] Pollutants shall be analyzed using the analytical methods described in 40 CFR Part 136 or an EPA approved Alternate Testing Procedure; where no methods are specified for a given pollutant that meet a specific reporting limit or method performance standard, an alternate method can be approved by the Central Valley Water Board.

[2] 24-hour flow proportional composite.

[3] pH and temperature shall be recorded at the time of ammonia sample collection.

[4] Compliance with the final effluent limitations for aluminum can be demonstrated using either total or acid-soluble (inductively coupled plasma/atomic emission spectrometry or inductively coupled plasma/mass spectrometry) analysis methods, as supported by USEPA's Ambient Water Quality Criteria for Aluminum document (EPA 440/5-86-008), or other standard methods that exclude aluminum silicate particles as approved by the Executive Officer.

[5] Concurrent with whole effluent toxicity monitoring.

[6] For priority pollutant constituents with effluent limitations, detection limits shall be below the effluent limitations. If the lowest minimum level (ML) published in Appendix 4 of the Policy for Implementation of Toxics Standards for Inland Surface Waters, Enclosed Bays, and Estuaries of California (State Implementation Plan or SIP) is not below the effluent limitation, the detection limit shall be the lowest ML. For priority pollutant constituents without effluent limitations, the detection limits shall be equal to or less than the lowest ML published in Appendix 4 of the SIP. Sampling and analysis of Bis (2-ethylhexyl) phthalate shall be conducted using ultra-clean techniques that eliminate the possibility of sample contamination.

[7] Hardness samples shall be collected concurrently with metals samples.

[8] Unfiltered methyl mercury and total mercury samples shall be taken using clean hands/dirty hands procedures, as described in U.S. EPA method 1669: Sampling Ambient Water for Trace Metals at EPA Water Quality Criteria Levels, for collection of equipment blanks (section 9.4.4.2), and shall be analyzed by U.S. EPA method 1630/1631 (Revision E) with a method detection limit of 0.02 ng/l for methyl mercury and 0.2 ng/l for total mercury.

[9] Monitoring for nitrite and nitrate shall be conducted concurrently.

[10] Samples for Total coliform organisms may be collected at any point following disinfection.

[11] This is the difference of Nitrate+Nitrite and nitrite.

V. WHOLE EFFLUENT TOXICITY TESTING REQUIREMENTS

A. Acute Toxicity Testing. The Discharger shall conduct acute toxicity testing to determine whether the effluent is contributing acute toxicity to the receiving water. The Discharger shall meet the following acute toxicity testing requirements for the Seasonal Secondary and Year-Round Tertiary discharges:

1. *Monitoring Frequency* – The Discharger shall perform monthly acute toxicity testing, concurrent with effluent ammonia sampling.

2. *Sample Types* – For static non-renewal and static renewal testing, the samples shall be 24-hour flow proportional composites and shall be representative of the volume and quality of the discharge. The effluent samples shall be taken at the effluent monitoring location EFF-001A when discharging from the secondary facility or EFF-001B when discharging from the Tertiary-level Treatment facility.

3. *Test Species* – Test species shall be rainbow trout (*Oncorhynchus mykiss*).

4. *Methods* – The acute toxicity testing samples shall be analyzed using EPA-821-R-02-012, Fifth Edition. Temperature, total residual chlorine, and pH shall be recorded at the time of sample collection. No pH adjustment may be made unless approved by the Executive Officer.

5. *Test Failure* – If an acute toxicity test does not meet all test acceptability criteria, as specified in the test method, the Discharger must re-sample and re-test as soon as possible, not to exceed 7 days following notification of test failure.

B. Chronic Toxicity Testing. The Discharger shall conduct three species chronic toxicity testing to determine whether the effluent is contributing chronic toxicity to the receiving water. The Discharger shall meet the following chronic toxicity testing requirements for the Seasonal Secondary and Year-Round Tertiary discharges:

1. *Monitoring Frequency –* The Discharger shall perform monthly three species chronic toxicity testing.

2. *Sample Types* – Effluent samples shall be flow proportional 24-hour composites and shall be representative of the volume and quality of the discharge. The effluent samples shall be taken at the effluent monitoring location specified in the Monitoring and Reporting Program. The receiving water control shall be a grab sample obtained from the RSW-001 sampling location, as identified in the Monitoring and Reporting Program.

3. *Sample Volumes* – Adequate sample volumes shall be collected to provide renewal water to complete the test in the event that the discharge is intermittent.

4. *Test Species* – Chronic toxicity testing measures sublethal (e.g., reduced growth, reproduction) and/or lethal effects to test organisms exposed to an effluent compared to that of the control organisms. The Discharger shall conduct chronic toxicity tests with:

   - The cladoceran, water flea, *Ceriodaphnia dubia* (survival and reproduction test);
   - The fathead minnow, *Pimephales promelas* (larval survival and growth test); and
   - The green alga, *Selenastrum capricornutum* (growth test).

5. *Methods* – The presence of chronic toxicity shall be estimated as specified in *Short-term Methods for Estimating the Chronic Toxicity of Effluents and Receiving Waters to Freshwater Organisms, Fourth Edition*, EPA/821-R-02-013, October 2002.

6. *Reference Toxicant* – As required by the SIP, all chronic toxicity tests shall be conducted with concurrent testing with a reference toxicant and shall be reported with the chronic toxicity test results.

7. *Dilutions* – For regular and accelerated chronic toxicity monitoring, it is not necessary to perform the test using a dilution series. The test may be performed using 100% effluent and two controls. For TRE monitoring, the chronic toxicity testing shall be performed using the dilution series identified in Table E-4, below. The receiving water control shall be used as the diluent (unless the receiving water is toxic).

Table E-4. Chronic Toxicity Testing Dilution Series

Sample	Dilutions (%)					Controls	
	100	75	50	25	12.5	Receiving Water	Laboratory Water
% Effluent	100	75	50	25	12.5	0	0
% Receiving Water	0	25	50	75	87.5	100	0
% Laboratory Water	0	0	0	0	0	0	100

7. *Test Failure* – The Discharger must re-sample and re-test as soon as possible, but no later than fourteen (14) days after receiving notification of a test failure. A test failure is defined as follows:

   a. The reference toxicant test or the effluent test does not meet all test acceptability criteria as specified in the *Short-term Methods for Estimating the Chronic Toxicity of Effluents and Receiving Waters to Freshwater Organisms, Fourth Edition*, EPA/821-R-02-013, October 2002 (Method Manual), and its subsequent amendments or revisions; or

   b. The percent minimum significant difference (PMSD) measured for the test exceeds the upper PMSD bound variability criterion in Table 6 on page 52 of the Method Manual. (A retest is only required in this case if the test results do not exceed the monitoring trigger specified in the Special Provision at section VI. 2.a.iii. of the Order.)

C. **WET Testing Notification Requirements.** The Discharger shall notify the Central Valley Water Board within 24-hours after the receipt of test results exceeding the

monitoring trigger during regular or accelerated monitoring, or an exceedance of the acute toxicity effluent limitation.

D. **WET Testing Reporting Requirements.** All toxicity test reports shall include the contracting laboratory's complete report provided to the Discharger and shall be in accordance with the appropriate "Report Preparation and Test Review" sections of the method manuals. At a minimum, whole effluent toxicity monitoring shall be reported as follows:

1. **Chronic WET Reporting.** Regular chronic toxicity monitoring results shall be reported to the Central Valley Water Board within 30 days following completion of the test, and shall contain, at minimum:

   c. The results expressed in TUc, measured as 100/NOEC, and also measured as 100/LC50, 100/EC25, 100/IC25, and 100/IC50, as appropriate.

   d. The statistical methods used to calculate endpoints;

   e. The statistical output page, which includes the calculation of the percent minimum significant difference (PMSD);

   f. The dates of sample collection and initiation of each toxicity test; and

   g. The results compared to the numeric toxicity monitoring trigger.

   Additionally, the monthly discharger self-monitoring reports shall contain an updated chronology of chronic toxicity test results expressed in TUc, and organized by test species, type of test (survival, growth or reproduction), and monitoring frequency, i.e., either quarterly, monthly, accelerated, or Toxicity Reduction Evaluation (TRE).

2. **Acute WET Reporting.** Acute toxicity test results shall be submitted with the monthly discharger self-monitoring reports and reported as percent survival.

3. **TRE Reporting.** Reports for TREs shall be submitted in accordance with the schedule contained in the Discharger's approved TRE Workplan.

4. **Quality Assurance (QA).** The Discharger must provide the following information for QA purposes:

   a. Results of the applicable reference toxicant data with the statistical output page giving the species, NOEC, LOEC, type of toxicant, dilution water used, concentrations used, PMSD, and dates tested.

   b. The reference toxicant control charts for each endpoint, which include summaries of reference toxicant tests performed by the contracting laboratory.

   c. Any information on deviations or problems encountered and how they were dealt with.

VI. LAND DISCHARGE MONITORING REQUIREMENTS- NOT APPLICABLE.

Land discharge monitoring requirements are specified in separate Waste Discharge Requirements (Order No. 99-112).

VII. RECLAMATION MONITORING REQUIREMENTS – NOT APPLICABLE

Reclamation monitoring requirements are specified in separate Waste Discharge Requirements (Order No. 99-112).

VIII. RECEIVING WATER MONITORING REQUIREMENTS – SURFACE WATER

A. Monitoring Locations RSW-001, RSW-002, RSW-003, and RSW-004

1. When discharging from either the secondary treatment facility or the tertiary treatment facility, the Discharger shall monitor the San Joaquin River as follows:

Table E-5. Receiving Water Monitoring Requirements

Parameter	Units	Sample Type	Minimum Sampling Frequency	Required Analytical Test Method	Monitoring Location
San Joaquin River Flow	mgd	Meter	Continuous		RSW-001
Dissolved Oxygen	mg/L	Grab	1/week	[1,2]	RSW-001, RSW-002, RSW-003, RSW-004
pH	Standard Units	Grab	1/week	[1,2]	RSW-001, RSW-002, RSW-003, RSW-004
Electrical Conductivity @ 25°C	µmhos/cm	Grab	1/Week	[1,2]	RSW-001, RSW-002, RSW-003, RSW-004
Temperature	°C	Grab	1/week	[1,2]	RSW-001, RSW-002, RSW-003, RSW-004
Turbidity	NTU	Grab	1/week	[1,2]	RSW-001, RSW-002, RSW-003, RSW-004
Fecal Coliform	MPN/100	Grab	1/Month[3]	[1]	RSW-001, RSW-002, RSW-003, RSW-004
Hardness (as $CaCO_3$)	mg/L	Grab	1/Month	[1]	RSW-001
Total Dissolved Solids	mg/L	Grab	1/Month	[1]	RSW-001, RSW-002, RSW-003, RSW-004

Priority Pollutants and Other Constituents of Concern (See Att. I)	See Att. I	See Att. I	See Att. I	See Att. I	RSW-001

[1] Pollutants shall be analyzed using the analytical methods described in 40 CFR Part136 or an EPA approved Alternate Testing Procedure; where no methods are specified for a given pollutant that meet a specific reporting limit or method performance standard, an alternate method can be approved by the Central Valley Water Board.

[2] A hand-held field meter may be used, provided the meter utilizes a USEPA-approved algorithm/method and is calibrated and maintained in accordance with the manufacturer's instructions. A calibration and maintenance log for each meter used for monitoring required by this Monitoring and Reporting Program shall be maintained at the Facility.

[3] Fecal coliform monitoring only required when discharging secondary treated wastewater. Monitoring not required when discharging tertiary treated wastewater.

IX. OTHER MONITORING REQUIREMENTS

A. Biosolids– Not Applicable

Biosolids regulated under WDR Order No.94-030

B. Municipal Water Supply

5. Monitoring Location SPL-001

The Discharger shall monitor the municipal water supply at SPL-001 as follows. A sampling station shall be established where a representative sample of the municipal water supply can be obtained. Municipal water supply samples shall be collected at approximately the same time as effluent samples.

Table E-6. Municipal Water Supply Monitoring Requirements

Parameter	Units	Sample Type	Minimum Sampling Frequency	Required Analytical Test Method
Total Dissolved Solids[1]	mg/L	Grab	1/quarter	[2]
Electrical Conductivity @ 25°C[1]	µmhos/cm	Grab	1/quarter	[2]
Standard Minerals[3]	mg/L	Grab	1/year	[2]

1 If the water supply is from more than one source, the total dissolved solids and electrical conductivity shall be reported as a weighted average and include copies of supporting calculations.

2 Pollutants shall be analyzed using the analytical methods described in 40 CFR Part 136.

3 Standard minerals shall include all major cations and anions and include verification that the analysis is complete (i.e., cation/anion balance).

C. Ultraviolet Light (UV) Disinfection System

1. Monitoring Location UVS-001 and UVS-002[1]

The Discharger shall monitor the UV disinfection system at UVS-001 and UVS-002 as follows:

Table E-7. Ultraviolet Light Disinfection System Monitoring

Parameter	Units	Sample Type	Minimum Sampling Frequency
Flow	MGD	Meter	Continuous [1]
Turbidity	NTU	Meter [2]	Continuous [1, 3]
Number of UV banks in operation	Number	~~Meter~~Observation	Continuous [1]
UV Transmittance	Percent (%)	Meter	Continuous [1]
~~UV Power Setting~~	~~Percent (%)~~	~~Meter~~	~~Continuous [1]~~
UV Dose [4]	~~MW sec~~mJ/cm [2]	Calculated	Continuous [1]

1 For continuous analyzers, the Discharger shall report documented routine meter maintenance activities including date, time of day, and duration, in which the analyzer(s) is not in operation. If analyzer(s) fail to provide continuous monitoring for more than two hours and influent and/or effluent from the disinfection process is not diverted for retreatment, the Discharger shall obtain and report hourly manual and/or grab sample results. The Discharger shall not decrease power settings or reduce the number of UV lamp banks in operation while the continuous analyzers are out of service and water is being disinfected.

2 The turbidity meter shall be stationed immediately after the membranes, prior to the UV disinfection process.

3 Report daily average and maximum turbidity ~~and maximum~~.

4 Report daily minimum hourly UV dose and~~,~~ daily average UV dose~~, and weekly average UV dose~~. ~~For t~~The daily minimum hourly UV dose shall consist of lowest hourly average dose provided in any channel that had

[1] Monitoring at UVS-002 required upon initiation of operation of the Phase 2 UV Disinfection Facilities.

at least one bank of lamps operating during the hour interval. For channels that did not operate for the entire hour interval, the dose shall be averaged based on the actual operation time.~~, also report associated number of banks, gallons per minute per lamp, and UV transmittance used in the calculation.~~

X. REPORTING REQUIREMENTS

A. General Monitoring and Reporting Requirements

1. The Discharger shall comply with all Standard Provisions (Attachment D) related to monitoring, reporting, and recordkeeping.

2. Upon written request of the Central Valley Water Board, the Discharger shall submit a summary monitoring report. The report shall contain both tabular and graphical summaries of the monitoring data obtained during the previous year(s).

3. **Compliance Time Schedules.** For compliance time schedules included in the Order, the Discharger shall submit to the Central Valley Water Board, on or before each compliance due date, the specified document or a written report detailing compliance or noncompliance with the specific date and task. If noncompliance is reported, the Discharger shall state the reasons for noncompliance and include an estimate of the date when the Discharger will be in compliance. The Discharger shall notify the Central Valley Water Board by letter when it returns to compliance with the compliance time schedule.

4. The Discharger shall report to the Central Valley Water Board any toxic chemical release data it reports to the State Emergency Response Commission within 15 days of reporting the data to the Commission pursuant to section 313 of the "*Emergency Planning and Community Right to Know Act*" of 1986.

5. **Reporting Protocols.** The Discharger shall report with each sample result the applicable Reporting Level (RL) and the current Method Detection Limit (MDL), as determined by the procedure in Part 136.

   The Discharger shall report the results of analytical determinations for the presence of chemical constituents in a sample using the following reporting protocols:

   a. Sample results greater than or equal to the RL shall be reported as measured by the laboratory (i.e., the measured chemical concentration in the sample).

   b. Sample results less than the RL, but greater than or equal to the laboratory's MDL, shall be reported as "Detected, but Not Quantified," or DNQ. The estimated chemical concentration of the sample shall also be reported.

      For the purposes of data collection, the laboratory shall write the estimated chemical concentration next to DNQ as well as the words "Estimated Concentration" (may be shortened to "Est. Conc."). The laboratory may, if such information is available, include numerical estimates of the data quality for the reported result. Numerical estimates of data quality may be percent accuracy

(± a percentage of the reported value), numerical ranges (low to high), or any other means considered appropriate by the laboratory.

c. Sample results less than the laboratory's MDL shall be reported as "Not Detected," or ND.
d. Dischargers are to instruct laboratories to establish calibration standards so that the ML value (or its equivalent if there is differential treatment of samples relative to calibration standards) is the lowest calibration standard. At no time is the Discharger to use analytical data derived from *extrapolation* beyond the lowest point of the calibration curve.

B. Self Monitoring Reports (SMRs)

1. The Discharger shall continue to submit eSMRs using the State Water Board's CIWQS Program Web site (http:www.waterboards.ca.gov/ciwqs/index.html). The Discharger shall maintain sufficient staffing and resources to ensure it submits eSMRs during the effective duration of this Order. This includes provision of training and supervision of individuals (e.g., Discharger personnel or consultant) on how to prepare and submit eSMRs.

2. Monitoring periods and reporting for all required monitoring shall be completed according to the following schedule:

Table E-8. Monitoring Periods and Reporting Schedule

Sampling Frequency	Monitoring Period Begins On…	Monitoring Period	SMR Due Date
Continuous	**Permit effective date**	All	Submit with monthly SMR
1/Hour	**Permit effective date**	Hourly	Submit with monthly SMR
1/Day	**Permit effective date**	(Midnight through 11:59 PM) or any 24-hour period that reasonably represents a calendar day for purposes of sampling.	Submit with monthly SMR
1/Week	**Permit effective date**	Sunday through Saturday	Submit with monthly SMR
1/Month	**Permit effective date**	First day of calendar month through last day of calendar month	First day of second calendar month following month of sampling
1/Quarter	**Permit effective date**	1 January through 31 March 1 April through 30 June 1 July through 30 September 1 October through 31 December	First day of second calendar month following month of sampling
2/Year	**Permit effective date**	1 January through 30 June 1 July through 31 December	First day of second calendar month following month of sampling
1/Year	**Permit effective date**	1 January through 31 December	First day of second calendar month following month of sampling

3. **Reporting Protocols.** The Discharger shall report with each sample result the applicable reported Minimum Level (ML) and the current Method Detection Limit (MDL), as determined by the procedure in 40 CFR Part 136.

   The Discharger shall report the results of analytical determinations for the presence of chemical constituents in a sample using the following reporting protocols:

   a. Sample results greater than or equal to the reported ML shall be reported as measured by the laboratory (i.e., the measured chemical concentration in the sample).

   b. Sample results less than the RL, but greater than or equal to the laboratory's MDL, shall be reported as "Detected, but Not Quantified," or DNQ. The estimated chemical concentration of the sample shall also be reported.

   For the purposes of data collection, the laboratory shall write the estimated chemical concentration next to DNQ as well as the words "Estimated Concentration" (may be shortened to "Est. Conc."). The laboratory may, if such information is available, include numerical estimates of the data quality for the reported result. Numerical estimates of data quality may be percent accuracy (+ a percentage of the reported value), numerical ranges (low to high), or any other means considered appropriate by the laboratory.

   c. Sample results less than the laboratory's MDL shall be reported as "Not Detected," or ND.

   d. Dischargers are to instruct laboratories to establish calibration standards so that the ML value (or its equivalent if there is differential treatment of samples relative to calibration standards) is the lowest calibration standard. At no time is the Discharger to use analytical data derived from extrapolation beyond the lowest point of the calibration curve.

4. **Reporting Requirements.** In reporting the monitoring data, the Discharger shall arrange the data in tabular form so that the date, the constituents, and the concentrations are readily discernible.

   a. The data shall be summarized to clearly illustrate whether the facility is operating in compliance with interim and/or final effluent limitations or with other waste discharge requirements (e.g., discharge specifications, receiving water limitations, special provisions, etc.).

   b. Reports must clearly show when discharging to EFF-001 or other permitted discharge locations. Reports must show the date and time that the discharge started and stopped at each location.

c. The highest daily maximum for the month and monthly and weekly averages shall be determined and recorded as needed to demonstrate compliance.

5. **Calculation Requirements**. The following shall be calculated and reported in the SMRs:

a. **Calendar Annual Average Limitations**. For constituents with effluent limitations specified as "calendar annual average" (aluminum, iron, and manganese) the Discharger shall report the annual average in the December SMR. The annual average shall be calculated as the average of the monthly averages for the calendar year.

b. **Mass Loading Limitations**. For BOD_5, TSS, and ammonia, the Discharger shall calculate and report the mass loading (lbs/day) in the SMRs. The mass loading shall be calculated as follows:

Mass Loading (lbs/day) = Flow (MGD) x Concentration (mg/L) x 8.34

When calculating daily mass loading, the daily average flow and constituent concentration shall be used. For weekly average mass loading, the weekly average flow and constituent concentration shall be used. For monthly average mass loading, the monthly average flow and constituent concentration shall be used.

c. **Removal Efficiency (BOD_5 and TSS)**. The Discharger shall calculate and report the percent removal of BOD_5 and TSS in the SMRs. The percent removal shall be calculated as specified in Section VII.A. of the Limitations and Discharge Requirements.

d. **Total Coliform Organisms Effluent Limitations.** The Discharger shall calculate and report the 7-day median of total coliform organisms for the effluent. The 7-day median of total coliform organisms shall be calculated as specified in Section VII.C. of the Limitations and Discharge Requirements.

e. **Dissolved Oxygen Receiving Water Limitations.** The Discharger shall calculate and report monthly in the self-monitoring report: i) the dissolved oxygen concentration, ii) the percent of saturation in the main water mass, and iii) the 95th percentile dissolved oxygen concentration.

f. **Turbidity Receiving Water Limitations.** The Discharger shall calculate and report the turbidity increase in the receiving water applicable to the natural turbidity condition specified in Section V.A.17.a-e. of the Limitations and Discharge Requirements.

g. **Temperature Receiving Water Limitations.** The Discharger shall calculate and report the temperature increase in the receiving water based on the difference in temperature at RSW-001 and RSW-002.

h. Chlorpyrifos and Diazinon Effluent Limitations (Sections IV.A.1.l and IV.A.2.k). The Discharger shall calculate and report the value of S_{AMEL} and S_{MDEL}. for the secondary effluent and the tertiary effluent, using the equation in Effluent Limitations IV.A.1.l and IV.A.2.k and consistent with the Compliance Determination language specified in Section VII.L.

6. The Discharger shall submit SMRs in accordance with the following requirements:

a. When electronic submittal of data is required and CIWQS does not provide for entry into a tabular format within the system, the Discharger shall electronically submit the data in a tabular format as an attachment. The Discharger is not required to duplicate the submittal of data that is entered in a tabular format within CIWQS.

b. The Discharger shall attach a cover letter to the SMR. The information contained in the cover letter shall clearly identify violations of the WDRs; discuss corrective actions taken or planned; and the proposed time schedule for corrective actions. Identified violations must include a description of the requirement that was violated and a description of the violation.

c. SMRs must be submitted to the Central Valley Water Board, signed and certified as required by the Standard Provisions (Attachment D), to the address listed below:

Regional Water Quality Control Board
Central Valley Region
NPDES Compliance and Enforcement Unit
11020 Sun Center Dr., Suite #200
Rancho Cordova, CA 95670-6114

C. Discharge Monitoring Reports (DMRs)

1. As described in section X.B.1 above, at any time during the term of this permit, the State Water Board or Central Valley Water Board may notify the Discharger to electronically submit SMRs that will satisfy federal requirements for submittal of Discharge Monitoring Reports (DMRs). Until such notification is given, the Discharger shall submit DMRs in accordance with the requirements described below.

2. DMRs must be signed and certified as required by the standard provisions (Attachment D). The Discharger shall submit the original DMR and one copy of the DMR to the address listed below:

STANDARD MAIL	FEDEX/UPS/ OTHER PRIVATE CARRIERS
State Water Resources Control Board Division of Water Quality c/o DMR Processing Center PO Box 100 Sacramento, CA 95812-1000	State Water Resources Control Board Division of Water Quality c/o DMR Processing Center 1001 I Street, 15th Floor Sacramento, CA 95814

3. All discharge monitoring results must be reported on the official USEPA pre-printed DMR forms (EPA Form 3320-1). Forms that are self-generated will not be accepted unless they follow the exact same format of EPA Form 3320-1.

D. Other Reports

1. **Progress Reports.** As specified in the compliance time schedules required in the Special Provisions contained in section VI of the Order, progress reports shall be submitted in accordance with the following reporting requirements. At minimum, the progress reports shall include a discussion of the status of final compliance, whether the Discharger is on schedule to meet the final compliance date, and the remaining tasks to meet the final compliance date.

Table E-9. Reporting Requirements for Special Provisions Progress Reports

Special Provision	Reporting Requirements
Compliance Schedule for Final Effluent Limitations for ammonia (section VI.C.7.e.)	**1 September**, annually, until final compliance
Pollution Prevention Plan for mercury (section VI.C.3.a.)	**1 September, annually** until final compliance
Compliance Schedule for Final Effluent Limitations for EC (section VII.C.7.d.)	**1 September, annually** until final compliance

2. **Analytical Methods Report. Within 60 days of permit adoption**, the Discharger shall submit a report outlining minimum levels, method detection limits, and analytical methods for approval, with a goal to achieve detection levels below applicable water quality criteria. At a minimum, the Discharger shall comply with the monitoring requirements for CTR constituents as outlined in section 2.3 and 2.4 of the SIP.

3. **Sanitary Sewer Overflows.** The Discharger's sanitary sewer system collects wastewater using sewers, pipes, pumps, and/or other conveyance systems and directs the raw sewage to the wastewater treatment plant. A "sanitary sewer overflow" is defined as a discharge to ground or surface water from the sanitary sewer system at any point upstream of the wastewater treatment plant. Sanitary

sewer overflows are prohibited by this Order. All violations must be reported as required in Standard Provisions. Facilities (such as wet wells, regulated impoundments, tanks, highlines, etc.) may be part of a sanitary sewer system and discharges to these facilities are not considered sanitary sewer overflows, provided that the waste is fully contained within these temporary storage facilities.

4. **Effluent and Receiving Water Characterization Study.** An effluent and receiving water monitoring study is required to ensure adequate information is available for the next permit renewal. During the third or fourth year of this permit term, for one year, the Discharger shall conduct monthly monitoring of the effluent at EFF-001A (Secondary Effluent) and at EFF-001B (Tertiary Effluent), and of the receiving water at RSW-001 for all priority pollutants and other constituents of concern as described in Attachment I. For the effluent (i.e., both secondary and tertiary discharges), monthly monitoring is only required during months a discharge occurs. For the receiving water, the Discharger shall conduct monthly monitoring, regardless of a discharge to the receiving water. Dioxin and Furan sampling shall be performed only twice during the year, as described in Attachment I. The report shall be completed in conformance with the following schedule.

Task	Compliance Date
i. Submit Work Plan	No later than 2 years 6 months from adoption of this Order
ii. Conduct monthly[1] monitoring	During third or fourth year of permit term
iii. Submit Final Report	6 months following completion of final monitoring event

[1] Dioxin and Furan sampling shall be performed only twice during the year, as described in Attachment I.

5. **Annual Operations Report.** By 30 January of each year, the Discharger shall submit a written report to the Executive Officer containing the following:

   a. The names, certificate grades, and general responsibilities of all persons employed at the Facility.

   b. The names and telephone numbers of persons to contact regarding the plant for emergency and routine situations.

   c. A statement certifying when the flow meter(s) and other monitoring instruments and devices were last calibrated, including identification of who performed the calibration.

   d. A statement certifying whether the current operation and maintenance manual, and contingency plan, reflect the wastewater treatment plant as currently constructed and operated, and the dates when these documents were last revised and last reviewed for adequacy.

e. The Discharger may also be requested to submit an annual report to the Central Valley Water Board with both tabular and graphical summaries of the monitoring data obtained during the previous year. Any such request shall be made in writing. The report shall discuss the compliance record. If violations have occurred, the report shall also discuss the corrective actions taken and planned to bring the discharge into full compliance with the waste discharge requirements.

6. Annual Pretreatment Reporting Requirements. The Discharger shall submit annually a report to the Central Valley Water Board, with copies to USEPA Region 9 and the State Water Board, describing the Discharger's pretreatment activities over the previous 12 months. In the event that the Discharger is not in compliance with any conditions or requirements of this Order, including noncompliance with pretreatment audit/compliance inspection requirements, then the Discharger shall also include the reasons for noncompliance and state how and when the Discharger shall comply with such conditions and requirements.

An annual report shall be submitted by **28 February** and include at least the following items:

a. A summary of analytical results from representative, flow proportioned, 24-hour composite sampling of the POTW's influent and effluent for those pollutants USEPA has identified under section 307(a) of the CWA which are known or suspected to be discharged by industrial users.

Sludge shall be sampled during the same 24-hour period and analyzed for the same pollutants as the influent and effluent sampling and analysis. The sludge analyzed shall be a composite sample of a minimum of 12 discrete samples taken at equal time intervals over the 24-hour period. Wastewater and sludge sampling and analysis shall be performed at least annually. The discharger shall also provide any influent, effluent or sludge monitoring data for nonpriority pollutants which may be causing or contributing to Interference, Pass-Through or adversely impacting sludge quality. Sampling and analysis shall be performed in accordance with the techniques prescribed in 40 CFR Part136 and amendments thereto.

b. A discussion of Upset, Interference, or Pass-Through incidents, if any, at the treatment plant, which the Discharger knows or suspects were caused by industrial users of the POTW. The discussion shall include the reasons why the incidents occurred, the corrective actions taken and, if known, the name and address of, the industrial user(s) responsible. The discussion shall also include a review of the applicable pollutant limitations to determine whether any additional limitations, or changes to existing requirements, may be necessary to prevent Pass-Through, Interference, or noncompliance with sludge disposal requirements.

c. The cumulative number of industrial users that the Discharger has notified regarding Baseline Monitoring Reports and the cumulative number of industrial user responses.

d. An updated list of the Discharger's industrial users including their names and addresses, or a list of deletions and additions keyed to a previously submitted list. The Discharger shall provide a brief explanation for each deletion. The list shall identify the industrial users subject to federal categorical standards by specifying which set(s) of standards are applicable. The list shall indicate which categorical industries, or specific pollutants from each industry, are subject to local limitations that are more stringent than the federal categorical standards. The Discharger shall also list the noncategorical industrial users that are subject only to local discharge limitations. The Discharger shall characterize the compliance status through the year of record of each industrial user by employing the following descriptions:

i. complied with baseline monitoring report requirements (where applicable);

ii. consistently achieved compliance;

iii. inconsistently achieved compliance;

iv. significantly violated applicable pretreatment requirements as defined by 40 CFR 403.8(f)(2)(vii);

v. complied with schedule to achieve compliance (include the date final compliance is required);

vi. did not achieve compliance and not on a compliance schedule; and

vii. compliance status unknown.

A report describing the compliance status of each industrial user characterized by the descriptions in items iii through vii above shall be submitted for each calendar quarter **within 21 days of the end of the quarter**. The report shall identify the specific compliance status of each such industrial user and shall also identify the compliance status of the POTW with regards to audit/pretreatment compliance inspection requirements. If none of the aforementioned conditions exist, at a minimum, a letter indicating that all industries are in compliance and no violations or changes to the pretreatment program have occurred during the quarter must be submitted. The information required in the fourth quarter report shall be included as part of the annual report. This quarterly reporting requirement shall commence upon issuance of this Order.

e. A summary of the inspection and sampling activities conducted by the Discharger during the past year to gather information and data regarding the industrial users. The summary shall include:

i. The names and addresses of the industrial users subjected to surveillance and an explanation of whether they were inspected, sampled, or both and the frequency of these activities at each user; and

ii. The conclusions or results from the inspection or sampling of each industrial user.

iii. A summary of the compliance and enforcement activities during the past year. The summary shall include the names and addresses of the industrial users affected by the following actions:

iv. Warning letters or notices of violation regarding the industrial users' apparent noncompliance with federal categorical standards or local discharge limitations. For each industrial user, identify whether the apparent violation concerned the federal categorical standards or local discharge limitations.

v. Administrative orders regarding the industrial users noncompliance with federal categorical standards or local discharge limitations. For each industrial user, identify whether the violation concerned the federal categorical standards or local discharge limitations.

vi. Civil actions regarding the industrial users' noncompliance with federal categorical standards or local discharge limitations. For each industrial user, identify whether the violation concerned the federal categorical standards or local discharge limitations.

vii. Criminal actions regarding the industrial users noncompliance with federal categorical standards or local discharge limitations. For each industrial user, identify whether the violation concerned the federal categorical standards or local discharge limitations.

viii. Assessment of monetary penalties. For each industrial user identify the amount of the penalties.

ix. Restriction of flow to the POTW.

x. Disconnection from discharge to the POTW.

xi. A description of any significant changes in operating the pretreatment program which differ from the information in the Discharger's approved Pretreatment Program including, but not limited to, changes concerning: the program's administrative structure, local industrial discharge limitations, monitoring program or monitoring frequencies, legal authority or enforcement policy, funding mechanisms, resource requirements, or staffing levels.

xii. A summary of the annual pretreatment budget, including the cost of pretreatment program functions and equipment purchases.

Duplicate signed copies of these Pretreatment Program reports shall be submitted to the Central Valley Water Board and the:

State Water Resources Control Board
Division of Water Quality
1001 I Street or P.O. Box 100
Sacramento, CA 95812

and the

Regional Administrator
U.S. Environmental Protection Agency W-5
75 Hawthorne Street
San Francisco, CA 94105

ATTACHMENT F – FACT SHEET

Table of Contents

I. Permit Information F-3
II. Facility Description F-4
A. Description of Wastewater and Biosolids Treatment or Controls F-4
B. Discharge Points and Receiving Waters F-6
C. Summary of Existing Requirements and Self-Monitoring Report (SMR) Data F-7
D. Compliance Summary F-8
E. Planned Changes F-9
III. Applicable Plans, Policies, and Regulations F-9
A. Legal Authorities F-9
B. California Environmental Quality Act (CEQA) F-9
C. State and Federal Regulations, Policies, and Plans F-9
D. Impaired Water Bodies on CWA 303(d) List F-11
E. Other Plans, Polices and Regulations F-12
IV. Rationale For Effluent Limitations and Discharge Specifications F-12
A. Discharge Prohibitions. F-13
B. Technology-Based Effluent Limitations F-14
1. Scope and Authority F-14
2. Applicable Technology-Based Effluent Limitations F-16
C. Water Quality-Based Effluent Limitations (WQBELs) F-17
1. Scope and Authority F-17
2. Applicable Beneficial Uses and Water Quality Criteria and Objectives F-18
3. Determining the Need for WQBELs F-40
4. WQBEL Calculations F-69
5. Whole Effluent Toxicity (WET) F-72
D. Final Effluent Limitations F-75
1. Mass-based Effluent Limitations F-75
2. Averaging Periods for Effluent Limitations F-75
3. Satisfaction of Anti-Backsliding Requirements F-76
4. Satisfaction of Antidegradation Policy F-79
5. Stringency of Requirements for Individual Pollutants F-84
E. Interim Effluent Limitations F-88
F. Land Discharge Specifications – Not Applicable F-89
G. Reclamation Specifications – Not Applicable F-89
V. Rationale for Receiving Water Limitations F-90
A. Surface Water F-90
B. Groundwater.—Not Applicable F-90
VI. Rationale for Monitoring and Reporting Requirements F-90
A. Influent Monitoring F-91
B. Effluent Monitoring F-91
C. Whole Effluent Toxicity Testing Requirements F-93
D. Receiving Water Monitoring F-93
E. Other Monitoring Requirements F-93

VII. Rationale for Provisions F-94
A. Standard Provisions F-94
B. Special Provisions F-94
1. Reopener Provisions F-94
2. Special Studies and Additional Monitoring Requirements F-96
3. Best Management Practices and Pollution Prevention F-99
4. Construction, Operation, and Maintenance Specifications F-100
5. Special Provisions for Municipal Facilities (POTWs Only) F-102
6. Other Special Provisions F-102
7. Compliance Schedules F-103
VIII. Public Participation F-104
A. Notification of Interested Parties F-104
B. Written Comments F-104
C. Public Hearing F-104
D. Waste Discharge Requirements Petitions F-105
E. Information and Copying F-105
F. Register of Interested Persons F-105
G. Additional Information F-105

List of Tables

Table F-1. Facility Information F-3
Table F-2. Historic Effluent Limitations and Monitoring Data F-7
Table F-3. 303 (d) List for the San Joaquin River (Merced R to Tuolumne R) F-11
Table F-4a. Summary of Technology-based Effluent Limitations, Seasonal Secondary-level Treated Discharge F-17
Table F-4b. Summary of Technology-based Effluent Limitations, Year-round Tertiary-level Treated Discharge F-17
Table F-5. Basin Plan Beneficial Uses F-19
Table F-6. Mixing Zones and Dilution Credits Allowed F-28
Table F-7: Zinc ECA Evaluation for the Secondary Effluent F-37
Table F-8: Lead ECA Evaluation for the Secondary Effluent F-39
Table F-9. Summary of ECA Evaluations for CTR Hardness-dependent Metals F-40
Table F-10. Salinity Water Quality Criteria/Objectives F-65
Table F-11a. Summary of Water Quality-Based Effluent Limitations (Seasonal Discharge) F-71
Table F-11b. Summary of Water Quality-Based Effluent Limitations (Year Round Discharge) F-72
Table F-12: Whole Effluent Chronic Toxicity Testing Results F-73
Table F-13a. Summary of Final Effluent Limitations (Seasonal Secondary) F-86
Table F-13b. Summary of Final Effluent Limitations (Year-Round Tertiary) F-87

ATTACHMENT F – FACT SHEET

As described in the Findings in section II of this Order, this Fact Sheet includes the legal requirements and technical rationale that serve as the basis for the requirements of this Order.

This Order has been prepared under a standardized format to accommodate a broad range of discharge requirements for Dischargers in California. Only those sections or subsections of this Order that are specifically identified as "not applicable" have been determined not to apply to this Discharger. Sections or subsections of this Order not specifically identified as "not applicable" are fully applicable to this Discharger.

I. PERMIT INFORMATION

The following table summarizes administrative information related to the Facility.

Table F-1. Facility Information

WDID	5C500102001
Discharger	City of Modesto
Name of Facility	City of Modesto Water Quality Control Facility
Facility Address	1221 Sutter Ave
	Modesto, CA 95351
	Stanislaus
Facility Contact, Title and Phone	Gary DeJesus, Deputy Director, Public Works (209) 577-6300
Authorized Person to Sign and Submit Reports	Laura Anhalt, Wastewater Treatment Plant Operator, CPEPublic Works (209) 577-6300
Mailing Address	SAME
Billing Address	SAME
Type of Facility	Publicly-Owned Domestic Wastewater Treatment Works
Major or Minor Facility	Major
Threat to Water Quality	1
Complexity	A
Pretreatment Program	Yes
Reclamation Requirements	Land application regulated under waste discharge requirements, Order No. 99-112 or future updated order
Facility Permitted Flow	70 million gallons per day (mgd), Disinfected Secondary Treated Wastewater (Discharge permitted only during the period from 1 Oct through 30 May) 19.1 mgd, Title 22 Tertiary-level (or Equivalent) Treated Wastewater
Facility Design Flow	70 million gallons per day (mgd), Disinfected Secondary Treated Wastewater (Discharge permitted only during the period from 1 Oct through 30 May) Currently 2.3 mgd, expanding to 19.1 mgd Title 22 Tertiary-level (or Equivalent) Treated Wastewater
Watershed	San Joaquin River Watershed
Receiving Water	San Joaquin River
Receiving Water Type	Inland surface water tributary to Sacramento-San Joaquin Delta

A. The City of Modesto (hereinafter Discharger) owns and operates the City of Modesto Water Quality Control Facility (hereinafter Facility), a Publicly-Owned Domestic Wastewater Treatment Works.

For the purposes of this Order, references to the "discharger" or "permittee" in applicable federal and state laws, regulations, plans, or policy are held to be equivalent to references to the Discharger herein.

B. The Facility discharges wastewater to San Joaquin River, a water of the United States, and was previously regulated by Order R5-2008-0059-01 which was adopted on 25 April 2008 and amended by Order R5-2010-0040 on 18 March 2010. The Discharger submitted an early Report of Waste Discharge (ROWD), dated 21 September 2010, requesting a NPDES permit renewal to continue discharging seasonally up to 70 mgd of disinfected secondary treated wastewater until the Discharger's Facility upgrades can be completed, at which time the seasonal secondary discharge will be ceased and the Discharger requests a year-round discharge of up to 19.1 mgd of disinfected tertiary treated wastewater to be discharged from the City of Modesto Water Quality Control Facility (hereinafter Facility). The ROWD was submitted early, because the Discharger requested an increase in the permitted tertiary treated discharge from the previous Order. A site visit was conducted on 4 October 2011, to observe operations.

II. FACILITY DESCRIPTION

The Discharger provides sewerage service for the City of Modesto, the community of Empire, and a portion of the City of Ceres, serving a population of approximately 225,000. In addition to domestic wastewater, the Discharger operates a pretreatment program that has issued seventeen liquid waste hauler permits, two groundwater clean-up permits, and fifty industrial wastewater permits. The Discharger's collection system consist of approximately 670 miles of sewer lines, which collect and convey an average of influent flow of 20.9 million gallons per day to the Facility (2010 annual average flow).

The Facility consists of separate primary and secondary treatment facilities. The primary treatment facility, located at 1221 Sutter Avenue, provides primary treatment of the raw wastewater, and then transfers the treated effluent to the secondary treatment facility, located approximately 6.5 miles to the southwest at 7007 Jennings Road.

A. Description of Wastewater and Biosolids Treatment or Controls

The primary treatment plant influent pump station and headworks structures provide pumping, screening, grit removal, and flow measurement of the influent. The primary treatment facility has a design treatment capacity of 62.5 mgd, and a design hydraulic capacity of 80 mgd. Wastewater is pumped into the headworks by constant-speed screw pumps. From the pumps, wastewater passes through four climber-type mechanical bar screens. Screenings are dropped to a continuous conveyor for transfer to a compactor for additional dewatering. Wastewater flow from the screens passes to one of three grit chambers, where the separated grit slurry is pumped to cyclone separators for additional dewatering. Once through the grit chambers,

wastewater flow is measured by parshall flumes and then distributed to one of two primary clarifiers. Sludge from the clarifiers is transferred to thickeners, then processed and stabilized through anaerobic digesters. Digested sludge is transferred to holding tanks where it is periodically drawn to unlined drying beds, with supernatant flows routed to the septage disposal station for blending with influent wastewater. The Discharger applies the stabilized sludge as a soil amendment on the City's 2,526 acre ranch, which is regulated by separate waste discharge requirements, Order 94-030.

After clarification, primary effluent is directed to the secondary treatment facility, where approximately half of the primary effluent receives treatment with fixed film reactors (FFR's) and then is combined with primary effluent in an aerated recirculation channel. Flow in the recirculation channel is then distributed to three parallel facultative ponds for further treatment, and then transferred to one of two storage ponds until it can be discharged to the SJR (1 October – 31 May, with 20:1 flow ratio, receiving water: effluent) or applied to the City's 2,526 acre ranch at agronomic rates. Prior to discharge to the SJR, the secondary-level treated effluent is disinfected with chlorine in a contact basin, and then dechlorinated with sulfur dioxide. The secondary treatment facility has a peak hydraulic treatment capacity of 70 mgd. Attachment C provides a flow schematic of the Facility.

The Discharger is in the process of upgrading the Facility by constructing a two-step membrane bioreactor (MBR) process that includes an aerated activated sludge process and a membrane separation process. An oxidation ditch provides activated sludge biological treatment, reducing biochemical oxygen demand and providing nitrogen removal (i.e., nitrification/denitrification). Ultraviolet (UV) light radiation disinfects the filtered wastewater prior to storage or discharge. Phase 1A construction of the tertiary treatment facilities (2.3 mgd), was completed on 1 July 2010.

The tertiary effluent discharge to the San Joaquin River has not occurred, because the design engineer has not signed off on the Phase 1A upgrades. Due to delays with State Revolving Fund loan funding, Phase 1B has not proceeded to construction and has been added to the proposed Phase 2 upgrade that was initiated in 2012, with completion expected by February 2018. At the completion of the Phase 2 upgrade the design capacity would be 14.9 MGD for year-round discharge. The Discharger has conducted an Antidegradation analysis for the full build out and requested approval for the full Phase 3 build out discharge of 19.1 MGD for this permit renewal.

Since 1999, the City has been separating cannery wastes from the domestic wastewater. A separate 60-inch outfall transports cannery wastewaters to the ranch land located next to the secondary-level treatment facility. The cannery wastewater is applied directly to the ranch land at agronomic rates during the canning season (July – September). Land application of cannery and secondary wastewaters to the ranch land is regulated by separate waste discharge requirements, Order 99-112.

B. Discharge Points and Receiving Waters

1. Both the primary and secondary facilities are in Section 4, T5S, R8E, MDB&M, as shown in Attachment B (Figure B-1).

2. From 1 Oct through 31 May, up to 70 mgd of secondary-level treated, disinfected effluent may be discharged under conditions of a minimum 20 to 1 flow ratio (receiving water: effluent) from Discharge Point 001 (see table on cover page) to the SJR, a water of the United States, in the reach between the mouth of the Merced River and Vernalis, within Hydrologic Unit 535/541, at a point Latitude 37º, 31', 20" N and longitude 121º, 05', 47" W. Attachment B provides a map of the area surrounding the Facility.

3. The SJR is a major tributary to the Sacramento-San Joaquin Delta that drains approximately 8.7 million acres in California's Central Valley. The SJR watershed is bounded by the Sierra Nevada Mountains on the east, the Coast Ranges on the west, the Delta to the north, and the Tulare Lake Basin to the south. From its source in the Sierra Nevada Mountains, the SJR flows southwesterly until it reaches Friant Dam. Below Friant Dam, the SJR flows westerly to the center of the San Joaquin Valley near Mendota, where it turns northwesterly to eventually join the Sacramento River in the Delta. The main stem of the entire SJR is about 300 miles long and drains approximately 13,500 square miles. Most of the valley floor is agricultural land, with an agricultural history dating to the 1870's. Prior to major water developments, the SJR supported a superlative Chinook salmon fishery (SWRCB, 1987). The SJR is also an important drinking water source for the state, as SJR flows account for approximately 15% of the total flows in the Delta.

   The hydrology of the SJR is complex and highly managed through the operation of dams, diversions, and supply conveyances. Water development has fragmented the watershed and greatly altered the natural hydrograph of the river. Runoff from the Sierra Nevada and foothills is regulated and stored in a series of reservoirs on the east side of the SJR. There are fifty-seven major reservoirs in the basin that have the capacity to store one thousand acre-feet (taf) of water. Operation of these reservoirs greatly influence the water quantity and quality of the SJR.

   Most of the natural flows from the Upper SJR and its headwaters are diverted at the Friant Dam to irrigate crops outside the SJR basin. Water is imported to the basin from the southern Delta via the Delta Mendota Canal (DMC) to replace flows that are diverted out of the basin to the south. Some water in the DMC is delivered directly to the west side of the SJR for agricultural supply, but the majority of DMC water is delivered to the Mendota Pool. Storage in the Mendota Pool is augmented by groundwater pumping from the adjacent aquifer and from incidental upstream releases from Millerton Lake. Water from the Mendota Pool is released to the Lower SJR, and various agricultural users divert water between the Mendota Pool and Sack Dam. Most or all of the remaining flow in the SJR is diverted at Sack Dam. As a result, the SJR downstream of the Sack Dam and upstream of Bear Creek frequently has little or no flow except during flood flows. During non-

flood flow periods, this reach of the SJR flows intermittently and is composed of groundwater accretions and agricultural return flows. The SJR downstream of Bear Creek once again becomes a permanent stream that flows all year.

The mean annual flow for the SJR Basin, as measured at a gaging station near Vernalis, was a little over 3 million acre-feet per year (maf/yr) between 1930 and 1998. The lowest annual flow, of approximately 400 thousand acre-feet per year (taf), occurred in 1977, and the highest annual flow, of over 15 maf occurred in 1983. The fifteen-year moving average of the mean annual flow is used by various agencies to identify the long-term trends that may be obscured by the annual variability of the flow. The moving average in the 1950's decreased significantly following the completion of Friant Dam, and in the late 1990's, the moving average was approximately 800 taf/yr.

C. Summary of Existing Requirements and Self-Monitoring Report (SMR) Data

Effluent limitations contained in the existing Order R5-2008-0059-01 for discharges from Discharge Point 001 (Monitoring Location EFF-001) and representative monitoring data from the term Order Order R5-2008-0059-01 are as follows:

Table F-2. Historic Effluent Limitations and Monitoring Data

Parameter	Units	Effluent Limitation			Monitoring Data (From Feb 2009 To Mar 2011)		
		Average Monthly	Average Weekly	Maximum Daily	Highest Average Monthly Discharge	Highest Average Weekly Discharge	Highest Daily Discharge
Aluminum (Total)	µg/L	373	200 (Annual Average)	750	330	243 (Annual Average)	370
Ammonia	mg/L	0.9	--	2.9	15.3	--	17.1
BOD(1)	mg/L	30	45	90	18.9	24.4	45
BOD % removal	%	65	--	--	97(6)	--	--
Dibromo-chloromethane	µg/L	5	--	14.5	4.2	--	6.94
Dichlorobromo-methane	µg/L	9.6	--	25.7	2.19	--	2.55
Carbon Tetrachloride	µg/L	4.5	--	8.9	0.15(2)	--	0.15(2)
Chloride	mg/L	216	--	282	217	--	222
EC	µmhos/cm	700/1000(3)	--	1341(3)	1204	--	--
Iron	µg/L	--	300 (Annual Average)	--	--	307 (Annual Average)	--
Manganese	µg/L	--	50 (Annual Average)	--	--	24 (Annual Average)	--

Parameter	Units	Effluent Limitation			Monitoring Data (From Feb 2009 To Mar 2011)		
		Average Monthly	Average Weekly	Maximum Daily	Highest Average Monthly Discharge	Highest Average Weekly Discharge	Highest Daily Discharge
Mercury, Total	µg/L	1.16 lbs/yr	--	--	0.054 lbs/yr	--	44
Molybdenum(4)	µg/L		--	23		--	8.0
Nitrate + Nitrite (as N)	mg/L	--	--	42	--	--	9.35
Percent removal	%	85	--	--	--	--	--
pH(5)	Std Units		--	6.5-8.5	--	--	6.9-7.9
Selenium (Total)	µg/L	4.1	--	8.2	1.9	--	2.3
Total Coliform	MPN/ 100 mL	--	23 (7 day Median)	240	--	7.8 (7 day Median)	170
Total Residual Chlorine	mg/L	0.01		0.02	0	--	0
Total Suspended Solids	mg/L						
TSS % removal	%	65			93(6)		

Notes:
(1) In 2011 seven results were non-detect. One-half of the method detection level was used to calculate averages.
(2) All results are below the detection method level of 0.3 µg/L. Thus, half of the method detection level was used as a result.
(3) Final EC effluent limits are an average monthly of 700 µmhos/cm from 1 April to 31 May and 1000 µmhos/cm from 1 October to 31 March. The final effluent limits are currently not in effective. This Order contains interim performance based effluent limitations for EC of 1,341 µmhos/cm, which is currently in effect.
(4) Data from 2001 to 2007 used for RPA for molybdenum due to insufficient data with acceptable MDLs and RLs since adoption of current permit.
(5) Instantaneous minimum and maximum.
(6) Average from October 2005 to March 2010 (September 2010 Report of Waste Discharge).

D. Compliance Summary

The Discharger reported the following effluent limitation violations for the period of February 2009 through March 2011:

Date	Constituent	Reported Result	Effluent Limitation
2 Mar 09	Ammonia (as N)	15.8 mg/L	15.3 mg/L(1) (Daily Maximum)
31 Dec 10	Iron	307 µ/L	300 µ/L (Annual Average)
31 Dec 10	Aluminum	243 µ/L	200 µ/L (Annual Average)
28 Feb 11	Chloride	217 mg/L	216 mg/L (Monthly Average)

(1) Interim maximum daily effluent limitation (MDEL) varies based on pH. On 2 March 2009 the MDEL for ammonia was 15.3 mg/L (as N) based on a pH of 7.4 at time of sampling.

A Notice of Violation letter regarding 31 December 2010 (aluminum and iron) and 28 February 2011 (chloride) violations were sent to the Discharger on 20 April 2011.

E. Planned Changes

The City has planned for a three phase upgrade to construct tertiary facilities that would increase the year round tertiary discharge to 19.1 MGD. The seasonal 70 MGD secondary discharge will cease with completion of the Phase 2 tertiary facility upgrades scheduled for completion in May 2018. With Completion of Phase 2 upgrades the design capacity will increase to 14.9 MGD for the tertiary year-round discharge. There is no specific time frame for initiation of Phase 3 (19.1 MGD year-round discharge), which will depend on population growth. However, the City has conducted an Antidegradation analysis for the full build out and requested approval for the full Phase 3 build out discharge of 19.1 MGD for this permit renewal.

The City's proposed treatment for phases 2 and 3 is similar to the completed Phase 1A process. A two-step membrane bioreactor (MBR) process includes an aerated activated sludge process and a membrane separation process. The MBR process is designed and operated to provide biological nutrient removal that nitrifies and denitrifies the wastewater. Ultraviolet (UV) light radiation disinfects the filtered wastewater prior to storage or discharge. The City developed a mitigated negative declaration in September 2010 for the Phase 2 Facility upgrades.

III. APPLICABLE PLANS, POLICIES, AND REGULATIONS

The requirements contained in this Order are based on the applicable plans, policies, and regulations identified in the Findings in section II of this Order. The applicable plans, policies, and regulations relevant to the discharge include the following:

A. Legal Authorities

This Order is issued pursuant to regulations in the Clean Water Act (CWA) and the California Water Code (CWC) as specified in the Finding contained at section II.C of this Order.

B. California Environmental Quality Act (CEQA)

This Order meets the requirements of CEQA as specified in the Finding contained at section II.E of this Order.

C. State and Federal Regulations, Policies, and Plans

1. **Water Quality Control Plans.** This Order implements the *Water Quality Control Plan, Fourth Edition (Revised October 2011), for the Sacramento and San Joaquin River Basins* (Basin Plan) as specified in the Finding contained at section II.H of this Order.

2. **National Toxics Rule (NTR) and California Toxics Rule (CTR).** This Order implements the NTR and CTR as specified in the Finding contained at section II.I of this Order.

3. **State Implementation Policy (SIP).** This Order implements the SIP as specified in the Finding contained at section II.I of this Order.

4. **Alaska Rule.** This Order is consistent with the Alaska Rule as specified in the Finding contained at section II.L of this Order.

5. **Antidegradation Policy.** As specified in the Finding contained at section II.N of this Order and as discussed in detail in the Fact Sheet (Attachment F, Section IV.D.4.), the discharge is consistent with the antidegradation provisions of 40 CFR section 131.12 and State Water Resources Control Board (State Water Board) Resolution 68-16.

6. **Anti-Backsliding Requirements.** This Order is consistent with anti-backsliding policies as specified in the Finding contained at section II.M of this Order. Compliance with the anti-backsliding requirements is discussed in the Fact Sheet (Attachment F, Section IV.D.3).

7. **Emergency Planning and Community Right to Know Act**

   Section 13263.6(a) of the CWC, requires that "*the Regional Water Board shall prescribe effluent limitations as part of the waste discharge requirements of a POTW for all substances that the most recent toxic chemical release data reported to the state emergency response commission pursuant to Section 313 of the Emergency Planning and Community Right to Know Act of 1986 (42 U.S.C. Sec. 11023) (EPCRA) indicate as discharged into the POTW, for which the State Water Board or the Regional Water Board has established numeric water quality objectives, and has determined that the discharge is or may be discharged at a level which will cause, have the reasonable potential to cause, or contribute to, an excursion above any numeric water quality objective*".

8. **Storm Water Requirements**

   USEPA promulgated federal regulations for storm water on 16 November 1990 in 40 CFR Parts122, 123, and 124. The NPDES Industrial Storm Water Program regulates storm water discharges from wastewater treatment facilities. Wastewater treatment plants are applicable industries under the storm water program and are obligated to comply with the federal regulations.

9. **Endangered Species Act.** This Order is consistent with the Endangered Species Act as specified in the Finding contained at section II.P of this Order.

D. Impaired Water Bodies on CWA 303(d) List

1. Under section 303(d) of the 1972 CWA, states, territories and authorized tribes are required to develop lists of water quality limited segments. The waters on these lists do not meet water quality standards, even after point sources of pollution have installed the minimum required levels of pollution control technology. On 30 November 2006 USEPA gave final approval to California's 2006 section 303(d) List of Water Quality Limited Segments. The Basin Plan references this list of Water Quality Limited Segments (WQLSs), which are defined as "…*those sections of lakes, streams, rivers or other fresh water bodies where water quality does not meet (or is not expected to meet) water quality standards even after the application of appropriate limitations for point sources* (40 CFR Part 130, et seq.)." The Basin Plan also states, "*Additional treatment beyond minimum federal standards will be imposed on dischargers to [WQLSs]. Dischargers will be assigned or allocated a maximum allowable load of critical pollutants so that water quality objectives can be met in the segment*." The listing for the SJR includes: boron, selenium, electrical conductivity, chlorpyrifos, diazinon, DDT, Group A pesticides, mercury, and unknown toxicity. With the exception of mercury and unknown toxicity, agriculture is identified as the primary source of pollutants on the California 303(d) List impairing the SJR constituents.

2. **Total Maximum Daily Loads (TMDLs).** USEPA requires the Central Valley Water Board to develop TMDLs for each 303(d) listed pollutant and water body combination. The status of each TMDL and applicable effluent limitations are discussed in Table F-3, below, for each specific pollutant.

Table F-3. 303 (d) List for the San Joaquin River (Merced R to Tuolumne R)

Pollutant	Potential Sources	Proposed TMDL Completion
Boron	Agriculture	Completed February 2007
Chlorpyrifos	Agriculture	Completed December 2006
DDE (Dichlorodiphenyldichloroethylene)	Agriculture	
DDT (Dichlorodiphenyltrichloroethane)	Agriculture	
Electrical Conductivity	Agriculture	Completed February 2007
Group A Pesticides	Agriculture	
Mercury	Resource Extraction	
Temperature	Source Unknown	
Unknown Toxicity	Source Unknown	
alpha.-BHC (Benzenehexachloride or alpha-HCH)	Source Unknown	

3. The 303(d) listings and TMDLs have been considered in the development of the Order. A pollutant-by-pollutant evaluation of each pollutant of concern is described in section VI.C.3. of this Fact Sheet.

E. Other Plans, Polices and Regulations

1. The discharge authorized herein and the treatment and storage facilities associated with the discharge of treated municipal wastewater, except for discharges of residual sludge and solid waste, are exempt from the requirements of Title 27, California Code of Regulations (CCR), section 20005 *et seq* (hereafter Title 27). The exemption, pursuant to Title 27 CCR section 20090(a), is based on the following:

   a. The waste consists primarily of domestic sewage and treated effluent;

   b. The waste discharge requirements are consistent with water quality objectives; and

   c. The treatment and storage facilities described herein are associated with a municipal wastewater treatment plant.

IV. RATIONALE FOR EFFLUENT LIMITATIONS AND DISCHARGE SPECIFICATIONS

Effluent limitations and toxic and pretreatment effluent standards established pursuant to sections 301 (Effluent Limitations), 302 (Water Quality Related Effluent Limitations), 304 (Information and Guidelines), and 307 (Toxic and Pretreatment Effluent Standards) of the CWA and amendments thereto are applicable to the discharge.

The CWA mandates the implementation of effluent limitations that are as stringent as necessary to meet water quality standards established pursuant to state or federal law [33 U.S.C., §1311(b)(1)(C); 40 CFR 122.44(d)(1)]. NPDES permits must incorporate discharge limits necessary to ensure that water quality standards are met. This requirement applies to narrative criteria as well as to criteria specifying maximum amounts of particular pollutants. Pursuant to federal regulations, 40 CFR 122.44(d)(1)(i), NPDES permits must contain limits that control all pollutants that "*are or may be discharged at a level which will cause, have the reasonable potential to cause, or contribute to an excursion above any state water quality standard, including state narrative criteria for water quality*." Federal regulations, 40 CFR 122.44(d)(1)(vi), further provide that "[w]*here a state has not established a water quality criterion for a specific chemical pollutant that is present in an effluent at a concentration that causes, has the reasonable potential to cause, or contributes to an excursion above a narrative criterion within an applicable State water quality standard, the permitting authority must establish effluent limits*."

The CWA requires point source dischargers to control the amount of conventional, non-conventional, and toxic pollutants that are discharged into the waters of the United States.

The control of pollutants discharged is established through effluent limitations and other requirements in NPDES permits. There are two principal bases for effluent limitations in the Code of Federal Regulations: 40 CFR 122.44(a) requires that permits include applicable technology-based limitations and standards; and 40 CFR 122.44(d) requires that permits include WQBELs to attain and maintain applicable numeric and narrative water quality criteria to protect the beneficial uses of the receiving water where numeric water quality objectives have not been established. The Basin Plan at page IV-17.00, contains an implementation policy, "*Policy for Application of Water Quality Objectives*", that specifies that the Regional Water Board "*will, on a case-by-case basis, adopt numerical limitations in orders which will implement the narrative objectives*." This Policy complies with 40 CFR 122.44(d)(1). With respect to narrative objectives, the Regional Water Board must establish effluent limitations using one or more of three specified sources, including: (1) USEPA's published water quality criteria, (2) a proposed state criterion (i.e., water quality objective) or an explicit state policy interpreting its narrative water quality criteria (i.e., the Regional Water Board's "*Policy for Application of Water Quality Objectives*")(40 CFR 122.44(d)(1)(vi)(A), (B) or (C)), or (3) an indicator parameter.

The Basin Plan includes numeric site-specific water quality objectives and narrative objectives for toxicity, chemical constituents, discoloration, radionuclides, and tastes and odors. The narrative toxicity objective states: "*All waters shall be maintained free of toxic substances in concentrations that produce detrimental physiological responses in human, plant, animal, or aquatic life*." (Basin Plan at III-8.00) The Basin Plan states that material and relevant information, including numeric criteria, and recommendations from other agencies and scientific literature will be utilized in evaluating compliance with the narrative toxicity objective. The narrative chemical constituents' objective states that waters shall not contain chemical constituents in concentrations that adversely affect beneficial uses. At minimum, "…*water designated for use as domestic or municipal supply (MUN) shall not contain concentrations of chemical constituents in excess of the maximum contaminant levels (MCLs)" in Title 22 of CCR.* The Basin Plan further states that, to protect all beneficial uses, the Regional Water Board may apply limits more stringent than MCLs. The narrative tastes and odors objective states: *"Water shall not contain taste- or odor-producing substances in concentrations that impart undesirable tastes or odors to domestic or municipal water supplies or to fish flesh or other edible products of aquatic origin, or that cause nuisance, or otherwise adversely affect beneficial uses*."

A. Discharge Prohibitions.

1. **Prohibition III.A (No discharge or application of waste other than that described in this Order).** This prohibition is based on CWC Section 13260 that requires filing of a report of waste discharge (ROWD) before discharges can occur. The Discharger submitted a ROWD for the discharges described in this Order; therefore, discharges not described in this Order are prohibited.

2. **Prohibition III.B (No bypasses or overflow of untreated wastewater, except under the conditions at CFR Part 122.41(m)(4)).** As stated in section I.G of Attachment D, Standard Provisions, this Order prohibits bypass from any portion of the treatment facility. Federal regulations, 40 CFR 122.41(m), define "bypass" as

the intentional diversion of waste streams from any portion of a treatment facility. This section of the federal regulations, 40 CFR 122.41(m)(4), prohibits bypass unless it is unavoidable to prevent loss of life, personal injury, or severe property damage. In considering the Regional Water Board's prohibition of bypasses, the State Water Board adopted a precedential decision, Order No. WQO 2002-0015, which cites the federal regulations, 40 CFR 122.41(m), as allowing bypass only for essential maintenance to assure efficient operation.

3. **Prohibition III.C (No controllable condition shall create a nuisance).** This prohibition is based on CWC Section 13050 that requires water quality objectives established for the prevention of nuisance within a specific area. The Basin Plan prohibits conditions that create a nuisance

4. **Prohibition III.D (No inclusion of pollutant free wastewater shall cause improper operation of the Facility's systems).** This prohibition is based on CFR Part 122.41 et seq. that requires the proper design and operation of treatment facilities

5. The discharge of disinfected secondary treated wastewater at Discharge Point 001 is prohibited except from October 1 to May 31, when River flows provide a flow ratio equal to or greater than 20:1 (river: effluent) as a Daily Average. This prohibition is included in the Order, because a secondary level disinfection has been allowed for the seasonal discharge. In a letter to the Central Valley Water Board dated 8 April 1999, The California Department of Public Health (DPH) indicated it would consider wastewater discharged to water bodies with identified beneficial uses of irrigation or contact recreation and where the wastewater receives dilution of more than 20:1 to be adequately disinfected if secondary-level disinfection is required. This prohibition ensures a minimum of a 20:1 dilution is available at all times when discharging secondary treated wastewater.

B. Technology-Based Effluent Limitations

1. Scope and Authority

Section 301(b) of the CWA and implementing USEPA permit regulations at 40 CFR 122.44 require that permits include conditions meeting applicable technology-based requirements at a minimum, and any more stringent effluent limitations necessary to meet applicable water quality standards. The discharge authorized by this Order must meet minimum federal technology-based requirements based on Secondary Treatment Standards at 40 CFR Part 133.

Regulations promulgated in 40 CFR 125.3(a)(1) require technology-based effluent limitations for municipal Dischargers to be placed in NPDES permits based on Secondary Treatment Standards or Equivalent to Secondary Treatment Standards.

The Federal Water Pollution Control Act Amendments of 1972 (PL 92-500) established the minimum performance requirements for POTWs [defined in section 304(d)(1)]. Section 301(b)(1)(B) of that Act requires that such treatment works

must, as a minimum, meet effluent limitations based on secondary treatment as defined by the USEPA Administrator.

Based on this statutory requirement, USEPA developed secondary treatment regulations, which are specified in 40 CFR Part 133. These technology-based regulations apply to all municipal wastewater treatment plants and identify the minimum level of effluent quality attainable by secondary treatment in terms of 5-day biochemical oxygen demand (BOD_5), total suspended solids (TSS), and pH.

Following publication of the secondary treatment regulations, legislative history indicates that Congress was concerned that USEPA had not "sanctioned" the use of certain biological treatment techniques that were effective in achieving significant reductions in 5-day biochemical oxygen demand (BOD_5) and total suspended solids (TSS) for secondary treatment. Therefore to prevent unnecessary construction of costly new facilities, Congress included language in the 1981 amendment to the Construction Grants statues [Section 23 of Pub. L. 97-147] that required USEPA to provide allowance for alternative biological treatment technologies such as trickling filters or waste stabilization ponds. In response to this requirement, definition of secondary treatment was modified on 20 September 1984 and 3 June 1985, and published in the revised secondary treatment regulations contained in 40 CFR 133.105. These regulations allow alternative limitations for facilities using trickling filters and waste stabilization ponds that meet the requirements for "equivalent to secondary treatment." These "equivalent to secondary treatment" limitations are *up to* 45 mg/L (monthly average) and *up to* 65 mg/L (weekly average) for BOD_5 and TSS.

Therefore, POTWs that use waste stabilization ponds, identified in 40 CFR 133.103, as the principal process for secondary treatment and whose operation and maintenance data indicate that the TSS values specified in the equivalent-to-secondary regulations cannot be achieved, can qualify to have their minimum levels of effluent quality for TSS adjusted upwards.

Furthermore, in order to address the variations in facility performance due to geographic, climatic, or seasonal conditions in different States, the Alternative State Requirements (ASR) provision contained in 40 CFR 133.105(d) was written. ASR allows States the flexibility to set permit limitations above the maximum levels of 45 mg/L (monthly average) and 65 mg/L (weekly average) for TSS from lagoons. However, before ASR limitations for suspended solids can be set, the effluent must meet the BOD_5 limitations as prescribed by 40 CFR 133.102(a). Presently, the maximum TSS value set by the State of California for lagoon effluent is 95 mg/L. This value corresponds to a 30-day consecutive average or an average over duration of less than 30 days.

In order to be eligible for equivalent-to-secondary limitations, a POTW must meet all of the following criteria:

a. The principal treatment process must be either a trickling filter or waste stabilization pond.

b. The effluent quality consistently achieved, despite proper operations and maintenance, is in excess of 30 mg/L BOD_5 and TSS.

c. Water quality is not adversely affected by the discharge. (40 CFR 133.101(g))

The treatment works as a whole provides significant biological treatment such that a minimum 65 percent reduction of BOD_5 is consistently attained (30-day average).

2. Applicable Technology-Based Effluent Limitations

a. BOD_5 and TSS, Disinfected Secondary-level Treated Discharge. Federal regulations at 40 CFR Part 133, establish the minimum weekly and monthly average level of effluent quality attainable by secondary treatment for BOD_5 and TSS. A daily maximum effluent limitation for BOD_5 and TSS is also included in the Order to ensure that the treatment works are not organically overloaded and operate in accordance with design capabilities. In addition, 40 CFR 133.102, in describing the minimum level of effluent quality attainable by secondary treatment, states that the 30-day average percent removal shall not be less than 85 percent. This Order contains a limitation requiring an average of 85 percent removal of BOD_5 and TSS over each calendar month.

b. BOD_5 and TSS, Year-round Tertiary-level Treated Discharge. Federal regulations, 40 CFR Part 133, establish the minimum weekly and monthly average level of effluent quality attainable by secondary treatment for BOD_5 and TSS. Tertiary treatment is necessary to protect the beneficial uses of the receiving stream and the final effluent limitations for BOD_5 and TSS are based on the technical capability of the tertiary process. BOD_5 is a measure of the amount of oxygen used in the biochemical oxidation of organic matter. The secondary and tertiary treatment standards for BOD_5 and TSS are indicators of the effectiveness of the treatment processes. The principal design parameter for wastewater treatment plants is the daily BOD_5 and TSS loading rates and the corresponding removal rate of the system. In applying 40 CFR Part 133 for weekly and monthly average BOD_5 and TSS limitations, the application of tertiary treatment processes results in the ability to achieve lower levels for BOD_5 and TSS than the secondary standards currently prescribed; the 30-day average BOD_5 and TSS limitations have been revised to 10 mg/L, which is technically based on the capability of a tertiary system. In addition to the average weekly and average monthly effluent limitations, a daily maximum effluent limitation for BOD_5 and TSS is included in the Order to ensure that the treatment works are not organically overloaded and operate in accordance with design capabilities. In addition, 40 CFR 133.102, in describing the minimum level of effluent quality attainable by secondary treatment, states that the 30-day average percent removal shall not be less than 85 percent. If 85 percent removal of BOD_5 and TSS must be achieved by a secondary treatment plant, it must also be achieved by a tertiary (i.e., treatment beyond secondary level) treatment plant. This Order contains a limitation requiring an average of 85 percent removal of BOD_5 and TSS over each calendar month. This Order requires Water Quality Based Effluent Limitations (WQBELs) that are equal to

or more stringent than the secondary technology-based treatment described in 40 CFR Part 133. (See section IV.C.3.d of this Attachment for the discussion on Pathogens which includes WQBELs for BOD_5 and TSS.)

c. **Flow.** The Facility is designed to provide secondary treatment for up to 70 mgd. Therefore, this Order contains an Average Daily Discharge Flow limit for the seasonal secondary-level treated effluent of 70 mgd (1 Oct – 31 May). The tertiary facilities will be constructed in three phases. Phase 1 has been constructed and has a design capacity of 2.3 mgd. Phase 2 has a design capacity of 14.9 mgd, and the full buildout at Phase 3 will have a design capacity of 19.1 mgd. Therefore, this Order includes average daily flow limits for the tertiary discharge ranging from 2.3 mgd to 19.1 mgd.

d. **pH.** The secondary treatment regulations at 40 CFR Part 133 also require that pH be maintained between 6.0 and 9.0 standard units

Summary of Technology-based Effluent Limitations
Discharge Point No. 001

Table F-4a. Summary of Technology-based Effluent Limitations, Seasonal Secondary-level Treated Discharge

Parameter	Units	Effluent Limitations				
		Average Monthly	Average Weekly	Maximum Daily	Instantaneous Minimum	Instantaneous Maximum
5-Day BOD @ 20 °C	mg/L	30	45	90		
Total Suspended Solids	mg/L	45	60	105		
Flow	mgd	--	--	70[1]		

[1] Average daily discharge flow

Table F-4b. Summary of Technology-based Effluent Limitations, Year-round Tertiary-level Treated Discharge

Parameter	Units	Effluent Limitations				
		Average Monthly	Average Weekly	Maximum Daily	Instantaneous Minimum	Instantaneous Maximum
5-Day BOD @ 20 °C	mg/L	10	15	20		
Total Suspended Solids	mg/L	10	15	20		
Flow	mgd	--	--	2.3-19.1[1]		

[1] Average daily discharge flow. Flow capacity will increase with construction of Phase 2 and 3 construction projects.

C. Water Quality-Based Effluent Limitations (WQBELs)

1. Scope and Authority

Section 301(b) of the CWA and 40 CFR 122.44(d) require that permits include limitations more stringent than applicable federal technology-based requirements

where necessary to achieve applicable water quality standards. This Order contains requirements, expressed as a technology equivalence requirement, more stringent than secondary treatment requirements that are necessary to meet applicable water quality standards. The rationale for these requirements, which consist of tertiary treatment or equivalent requirements, is discussed in section IV.C.d.xiii of this Fact Sheet.

40 CFR 122.44(d)(1)(i) mandates that permits include effluent limitations for all pollutants that are or may be discharged at levels that have the reasonable potential to cause or contribute to an exceedance of a water quality standard, including numeric and narrative objectives within a standard. Where reasonable potential has been established for a pollutant, but there is no numeric criterion or objective for the pollutant, WQBELs must be established using: (1) USEPA criteria guidance under CWA section 304(a), supplemented where necessary by other relevant information; (2) an indicator parameter for the pollutant of concern; or (3) a calculated numeric water quality criterion, such as a proposed state criterion or policy interpreting the state's narrative criterion, supplemented with other relevant information, as provided in 40 CFR 122.44(d)(1)(vi).

The process for determining reasonable potential and calculating WQBELs when necessary is intended to protect the designated uses of the receiving water as specified in the Basin Plan, and achieve applicable water quality objectives and criteria that are contained in other state plans and policies, or any applicable water quality criteria contained in the CTR and NTR.

2. Applicable Beneficial Uses and Water Quality Criteria and Objectives

The Basin Plan designates beneficial uses, establishes water quality objectives, and contains implementation programs and policies to achieve those objectives for all waters addressed through the plan. In addition, the Basin Plan implements State Water Board Resolution No. 88-63, which established state policy that all waters, with certain exceptions, should be considered suitable or potentially suitable for municipal or domestic supply.

The Basin Plan on page II-1.00 states: "*Protection and enhancement of existing and potential beneficial uses are primary goals of water quality planning…*" and with respect to disposal of wastewaters states that "...*disposal of wastewaters is [not] a prohibited use of waters of the State; it is merely a use which cannot be satisfied to the detriment of beneficial uses.*"

The federal CWA section 101(a)(2), states: "*it is the national goal that wherever attainable, an interim goal of water quality which provides for the protection and propagation of fish, shellfish, and wildlife, and for recreation in and on the water be achieved by July 1, 1983.*" Federal Regulations, developed to implement the requirements of the CWA, create a rebuttable presumption that all waters be designated as fishable and swimmable. Federal Regulations, 40 CFR sections 131.2 and 131.10, require that all waters of the State regulated to protect the beneficial uses of public water supply, protection and propagation of fish, shell fish

and wildlife, recreation in and on the water, agricultural, industrial and other purposes including navigation. Section 131.3(e), 40 CFR, defines existing beneficial uses as those uses actually attained after 28 November 1975, whether or not they are included in the water quality standards. Federal Regulation, 40 CFR section 131.10 requires that uses be obtained by implementing effluent limitations, requires that all downstream uses be protected and states that in no case shall a state adopt waste transport or waste assimilation as a beneficial use for any waters of the United States.

a. **Receiving Water and Beneficial Uses.** The existing beneficial uses of the SJR, from the mouth of the Merced River to Vernalis, as identified in Table II-1 of the Basin Plan include; agricultural supply (AGR) including both irrigation and stock watering, industrial process supply (PRO), body contact recreation, canoeing and rafting, (REC-1), and other non-body contact recreation (REC-2), warm freshwater aquatic habitat (WARM), migration of aquatic organisms (MIGR) both warm and cold habitats, warm habitat spawning, reproduction, and/or early development (SPWN), and wildlife habitat (WILD). Municipal and domestic supply (MUN) is identified as a potential beneficial use. Thus, beneficial uses applicable to SJR are described as follows:

Table F-5. Basin Plan Beneficial Uses

Discharge Point	Receiving Water Name	Beneficial Use(s)
001	San Joaquin River, from the mouth of the Merced River to Vernalis	Existing: Agricultural supply (AGR) including both irrigation and stock watering; industrial process supply (PRO); body contact recreation, canoeing and rafting, (REC-1); and, other non-body contact recreation (REC-2); warm freshwater aquatic habitat (WARM); migration of aquatic organisms (MIGR) both warm and cold habitats; warm habitat spawning, reproduction, and/or early development (SPWN); and, wildlife habitat (WILD). Potential: Municipal and domestic water supply (MUN).

b. **Effluent and Ambient Background Data.** Secondary effluent data was used for the RPA since adoption of the current permit (i.e., February 2009 to March 2011). This is the most representative data to conduct the RPA, because it represents how the Facility is operated under the current discharge requirements. However, for some constituents for which the RPA was inconclusive during that time period, additional data were used to complete the RPA (see section IV.C.3). Monitoring results from May through August of 2011 were used for the tertiary effluent. For the upstream receiving water, data collected by the Discharger was primarily used since February 2009. In addition to data collected by the Discharger, hardness data collected by the Westside Coalition for the Irrigated Lands Regulatory Program at SJR Patterson Irrigation District Pumps were evaluated. This site is located 2.5 miles upstream of the discharge location. Temperature and pH data from the Department of Water Resources (DWR) California Data Exchange Center (CDEC) was also utilized in the RPA. This data

was collected daily from January 2010 through September 2011 by the DWR at SJR near Patterson.

c. Assimilative Capacity/Mixing Zone

i. **Regulatory Guidance for Dilution Credits and Mixing Zones.** The Discharger has requested mixing zones and dilution credits for compliance with human carcinogen water quality criteria for the secondary effluent and agricultural water quality criteria for both the secondary and tertiary effluent. The Central Valley Water Board has the discretion to accept or deny mixing zones and dilution credits. The CWA directs states to adopt water quality standards to protect the quality of its waters. USEPA's current water quality standards regulation authorizes states to adopt general policies, such as mixing zones, to implement state water quality standards (40 CFR section 122.44 and section 122.45). The USEPA allows states to have broad flexibility in designing its mixing zone policies. Primary policy and guidance on determining mixing zone and dilution credits is provided by the SIP and the Basin Plan. If no procedure applies in the SIP or the Basin Plan, then the Central Valley Water Board may use the USEPA Technical Support Document for Water Quality-Based Toxics Control (EPA/505/2-90-001) (TSD).

The TSD defines a mixing zone as follows, "…*a mixing zone is an area where an effluent discharge undergoes initial dilution and is extended to cover the secondary mixing in the ambient waterbody. A mixing zone is an allocated impact zone where water quality criteria can be exceeded as long as acutely toxic conditions are prevented.*"[1] The SIP provides guidance on mixing zones and dilution credits in establishing water quality-based effluent limitations. Water quality criteria and objectives must be met throughout a water body except within a mixing zone. All mixing zones shall be as small as practicable and must meet specific conditions. The allowance of mixing zones by the Central Valley Water Board is discretionary and can be granted parameter-by-parameter and/or type of criteria (e.g., acute or chronic aquatic life criteria).

For non-priority pollutant constituents t~~T~~he allowance of mixing zones by the Central Valley Water Board is discussed in the Basin Plan, Policy for Application of Water Quality Objectives, which states in part, "*In conjunction with the issuance of NPDES and storm water permits, the Regional Board may designate mixing zones within which water quality objectives will not apply provided the discharger has demonstrated to the satisfaction of the Regional Board that the mixing zone will not adversely impact beneficial uses. If allowed, different mixing zones may be designated for different types of objectives, including, but not limited to, acute aquatic life objectives, chronic aquatic life objectives, human health*

1 TSD, Glossary

objectives, and acute and chronic whole effluent toxicity objectives, depending in part on the averaging period over which the objectives apply. In determining the size of such mixing zones, the Regional Board will consider the applicable procedures and guidelines in the EPA's Water Quality Standards Handbook and the [TSD]. Pursuant to EPA guidelines, mixing zones designated for acute aquatic life objectives will generally be limited to a small zone of initial dilution in the immediate vicinity of the discharge."[1]

For priority pollutants the SIP supersedes the Basin Plan mixing zone provisions. Section 1.4.2 of the SIP states, in part, "…*with the exception of effluent limitations derived from TMDLs, in establishing and determining compliance with effluent limitations for applicable human health, acute aquatic life, or chronic aquatic life priority pollutant criteria/objectives or the toxicity objective for aquatic life protection in a basin plan, the Regional Board may grant mixing zones and dilution credits to dischargers ... The applicable priority pollutant criteria and objectives are to be met throughout a water body except within any mixing zone granted by the Regional Board.* ***The allowance of mixing zones is discretionary and shall be determined on a discharge-by-discharge basis****. The Regional Board may consider allowing mixing zones and dilution credits only for discharges with a physically identifiable point of discharge that is regulated through an NPDES permit issued by the Regional Board.*" (**emphasis added**)[2]

Both federal and state guidance include similar mixing zone conditions, the SIP conditions are as follows:

"***A mixing zone shall be as small as practicable****. The following conditions must be met in allowing a mixing zone:* (**emphasis added**)

A: A mixing zone shall not:

1. *compromise the integrity of the entire water body;*

2. *cause acutely toxic conditions to aquatic life passing through the mixing zone;*

3. *restrict the passage of aquatic life;*

4. *adversely impact biologically sensitive or critical habitats, including, but not limited to, habitat of species listed under federal or State endangered species laws;*

5. *produce undesirable or nuisance aquatic life;*

1 Basin Plan, page IV-16.00
2 SIP, pg. 15

6. *result in floating debris, oil, or scum;*

7. *produce objectionable color, odor, taste, or turbidity;*

8. *cause objectionable bottom deposits;*

9. *cause nuisance;*

10. *dominate the receiving water body or overlap a mixing zone from different outfalls; or*

11. *be allowed at or near any drinking water intake. A mixing zone is not a source of drinking water. To the extent of any conflict between this determination and the Sources of Drinking Water Policy (Resolution No. 88-63), this SIP supersedes the provisions of that policy."*[1]

Section 1.4.2.1 of the SIP establishes the authority for the Central Valley Water Board to consider dilution credits based on the mixing zone conditions in a receiving water. Section 1.4.2.1 in part states:

> *"The dilution credit, D, is a numerical value associated with the mixing zone that accounts for the receiving water entrained into the discharge. The dilution credit is a value used in the calculation of effluent limitations (described in Section 1.4).* ***Dilution credits may be limited or denied on a pollutant-by-pollutant basis, which may result in a dilution credit for all, some, or no priority pollutants in the discharge." (emphasis added)***

The mixing zone is thus an administrative construct defined as an area around the outfall that may exceed water quality objectives, but is otherwise protective of the beneficial uses. Dilution is defined as the amount of mixing that has occurred at the edge of this mixing zone under critical conditions, thus protecting the beneficial uses at the concentration and for the duration and frequency required.

ii. **Monitoring and Field Studies and Resultant Critical/Design Flows.** The California Department of Water Resources (DWR) operates monitoring stations at various locations along the SJR. Information on real-time and historical SJR flows upstream of the discharge is available from the DWR San Joaquin River Patterson Station (SJP), which is approximately 2 miles upstream from the point of discharge. The mean of daily river flow values recorded upstream at the SJP station from 1 January 2001, to 1 June 2006, was approximately 1,564 cfs (1011 mgd), and the daily flows ranged from 222 cfs (144 mgd) to 27,232 cfs (17,603 mgd) (considering 1,945 observations).

1 SIP, pg. 17

In the vicinity of the discharge, the river is relatively shallow, and the field studies conducted by the Discharger indicated that at 310 cfs the river depth at the point of discharge was routinely less than 2 feet.

In the document, Technical Guidance Manual for Performing Wasteload Allocation, Book IV: Design Conditions, Chapter 1, USEPA discusses and recommends two methods for determining design flows, 1) the hydrologically-based method and 2) the biologically-based method, and the flows that should be used for both the criteria continuous concentration or CCC (chronic) and criteria maximum concentration or CMC (acute). For toxic wasteload allocation studies in which the hydrologically-based method is used, USEPA recommends the use of the 1Q10 flow as the design flow for the CMC and the 7Q10 as the design flow for the CCC. The 1Q10 and 7Q10 are both hydrologically-based design flows. The 1Q10 is the lowest 1-day average flow that occurs (on average) once every 10 years. The 7Q10 is the lowest 7-day average flow that occurs (on average) once every 10 years. USEPA recommend the long-term harmonic mean flow of the receiving water be used when considering permitting for human health criteria for carcinogenic pollutants. SJR flows from 1980 through 2006 (9,861 days) were analyzed for critical conditions using the USEPA's DFLOW 3.0 program, resulting in the following critical low flows:

Critical Low Flow	SJR @ Patterson (cfs)	SJR @ Patterson (mgd)
1Q10	229	148
7Q10	238	154
Harmonic Mean	799	516

However, because discharges to the receiving water are only allowed when the river to effluent ratio flow is at a minimum 20:1, and since the Facility effluent pumps operate at a minimum flow rate of 15.5 cubic feet per second (cfs), the minimum SJR flow rate at which secondary effluent can be discharged calculates to 310 cfs. Thus, it is reasonable to use 310 cfs as the representative 7Q10 critical flow of the river.

iii. **Dilution/Mixing Zone Study Results.** On May 2003 the discharger submitted a Dilution/Mixing Zone Study (The Study) to address requirements of the SIP, Section 1.4.2.1. In The Study the Discharger collected data between December 2001 and March 2003, to evaluate the extent of the effluent-influenced river volume and mixing conditions at the point the effluent flows into the river. Since background electrical conductivity (EC) levels in the river are generally 50% greater than the effluent, the Discharger collected EC measurements at a series of transects across the river, at each incremental longitudinal location along the river, to locate and identify the plume. In addition, on 17 April 2003, the Discharger performed stage measurements with a laser level beacon,

which indicated that the SJR is approximately 62 meters wide at the point where the Facility discharge enters the river. Field measurements recorded during The Study indicate EC levels vary by greater than 5% at the 125 meter transect, and therefore, the discharge is not completely mixed in the receiving water as defined by the SIP.

In accordance with Section 4.4 of the TSD, "*If completely mixed conditions do not occur within a short distance of the outfall, the…study should rely on mixing zone monitoring and modeling.*", and Section 1.4.2.1 of the SIP, *"Dilution credits and mixing zones for incompletely-mixed discharges shall be considered by the RWQCB only after the discharger has completed an independent mixing zone study and demonstrated to the satisfaction of the RWQCB that a dilution credit is appropriate.",* the Discharger used field measurements and monitoring results, and the CORMIX (Cornell Mixing Zone Expert System) software system to evaluate the mixing conditions.

The Central Valley Water Board has considered The Study and subsequent modeling predictions and finds that the Discharger did not satisfactorily demonstrate~~d~~ that a mixing zone allowance for acute and chronic aquatic life criteria complies with the regulatory requirements for mixing zones. Mixing zones for acute and chronic aquatic life criteria were denied in the previous permit and the Discharger did not request mixing zones for aquatic life criteria in the Report of Waste Discharge. The Discharger has only requested mixing zones for human carcinogen water quality criteria and agricultural water quality criteria, which are long-term criteria. Mixing zones and dilution for these long-term criteria is discussed below.

iv. **Evaluation of Available Dilution for Human Health Carcinogen Criteria.** Section 1.4.2.2 of the SIP, provides that mixing zones should not be allowed at or near drinking water intakes. Furthermore, regarding the application of a mixing zone for protection of human health, the TSD states that," …*the presence of mixing zones should not result in significant health risks, when evaluated using reasonable assumptions about exposure pathways. Thus, where drinking water contaminants are a concern, mixing zones should not encroach on drinking water intakes.*". There are no known drinking water intakes in the vicinity of the discharge. For human health carcinogen water quality criteria, critical environmental impacts are expected to occur far downstream from the source such that the mixing zone may extend to the point of complete mixing and have no impacts on beneficial uses and fully comply with all mixing zone regulatory requirements. By extending to the point of complete mixing, the dilution credits can be determined based on the flow ratio of the receiving water to the effluent.

The Discharger's mixing zone study only evaluated mixing to a point 200 meters downstream of the discharge. Therefore, the point of complete mixing was not determined, and although a mixing zone was

allowed in the previous permit, the edge of mixing zone was not defined. The State Water Board found in a precedential water quality order (WQ 2009-0003 for the City of Tracy Wastewater Treatment Plant) that it is necessary to define the edge of all mixing zones, including mixing zones for long-term criteria where any impacts are expected to occur far downstream after complete mixing. On 20 April 2012, the Discharger submitted an update to its 2003 Mixing Zone Study[1] that evaluated the edge of the mixing zones for long-term criteria.

This Order carries forward the mixing zone and dilution credits for human health carcinogen criteria from the previous permit as follows:~~, but requires the Discharger submit a study that demonstrates the edge of the mixing zone.~~

1. **Seasonal disinfected secondary discharge (70 mgd).** The minimum dilution at the point of complete mixing for the seasonal disinfected secondary discharge is 20:1, because this Order only allows the discharge of disinfected secondary effluent when river flows provide a minimum flow ratio of 20:1 (receiving water to effluent). Therefore, this Order grants a 20:1 dilution credit applicable to the human health carcinogen criteria for the seasonal disinfected secondary discharge, and the mixing zone extends 1,218 meters downstream of the discharge. Human health carcinogen criteria dilution credits have been used in the calculation of the WQBELs for carbon tetrachloride, dibromochloromethane, and dichlorobromomethane for the seasonal secondary discharge. In this case, the Central Valley Water Board finds the Facility is providing BPTC for these constituents and the human health carcinogen criteria mixing zone is as small as practicable.

2. **Year-round Tertiary-level treated discharge (19.1 mgd).** No mixing zone for human health carcinogen criteria is needed for year-round tertiary discharge and is not allowed in this Order.

v. **Evaluation of Available Dilution for Agricultural Water Quality Objectives.** For constituents where water quality criteria are based on agricultural water quality objectives, critical environmental impacts are expected to occur far downstream from the source such that the mixing zone may extend to the point of complete mixing and have no impacts on beneficial uses and fully comply with all mixing zone regulatory requirements. By extending to the point of complete mixing, in the previous Order the dilution credits ~~can be~~were determined based on the flow ratio of the receiving water to the effluent. For this Order, a mixing zone for agricultural water quality objectives has been established based on the Dischargers 2003 Mixing Zone Study and the 20 April 2012 Mixing Zone Update, as follows:

[1] Technical Memorandum by LWA, dated 20 April 2012, and revised 25 April 2012.

~~As discussed above for the human health carcinogen criteria, the Discharger's mixing zone has not defined the point of complete mixing, so this Order requires the Discharger to submit a study to define the edge of the mixing zone.~~

a) **Seasonal disinfected secondary discharge (70 mgd).** The minimum physical dilution at the point of complete mixing for the seasonal disinfected secondary discharge is 20:1, because this Order only allows the discharge of disinfected secondary effluent when river flows provide a minimum flow ratio of 20:1 (receiving water to effluent). Therefore, ~~this Order grants a 20:1~~ dilution credit of up to 20:1 may be applicable to the agricultural water quality criteria for the seasonal disinfected secondary discharge. Agricultural water quality criteria dilution credits have been used in the calculation of the WQBELs for molybdenum for the seasonal secondary discharge.

For molybdenum, the WQBELs based on a 20:1 dilution credit are an average monthly effluent limit (AMEL) and maximum daily effluent limit (MDEL) of 98 µg/L and 203 µg/L, respectively. Section 1.4.2.2 of the SIP requires that mixing zones are as small as practicable. Section 1.4.2.2.B of the SIP, in part states, *"The RWQCB shall deny or significantly limit a mixing zone and dilution credits as necessary to protect beneficial uses, meet the conditions of this Policy, or comply with other regulatory requirements."* Based on the Discharger's updated mixing zone study, a 20:1 dilution credit results in a mixing zone that extends 6,070 meters downstream for the seasonal secondary discharge. Based on existing Facility performance, the Facility can meet a performance-based MDEL of 23 µg/L (1.8:1 dilution), which correlates to a mixing zone that extends 23.4 meters downstream. This represents a mixing zone that is as small as practicable for this Facility and that fully complies with the SIP.

Furthermore, the Central Valley Water Board finds that granting of the full dilution credits could allocate an unnecessarily large portion of the receiving water's assimilative capacity for molybdenum and could violate the Antidegradation Policy. Although the Antidegradation Policy does not apply within a mixing zone, the allowance of a mixing zone allows an increase in the discharge of pollutants. Therefore, when a mixing zone and dilution credits are allowed, it is necessary to ensure the discharge complies with the Antidegradation Policy outside the mixing zone. The Antidegradation Policy requires that a discharge shall meet BPTC, which in this case for molybdenum is, at minimum, existing facility performance. Allowing the full dilution credit would allow the Discharger to increase its loading of molybdenum to the San Joaquin River and reduce the treatment and/or control of the pollutant. Allowing the Discharger to reduce the level of treatment and/or control

would not comply with the BPTC requirements of the Antidegradation Policy.

In addition, a less stringent effluent limit cannot be allowed due to federal antibacksliding requirements. Therefore, a performance-based MDEL of 23 µg/L for molybdenum is carried forward from the previous Order.

For the secondary discharge, a dilution credit of 1.8:1 is allowed for molybdenum, with a mixing zone that extends 23.4 meters downstream of the discharge.

b) **Year-round Tertiary-level treated discharge (19.1 mgd).** For the year-round tertiary discharge, a conservative approach for developing dilution credits for water quality objectives protective of the agricultural supply beneficial use is to use the 1Q10 flow and the maximum permitted effluent flow. Based on the 1Q10 SJR flow of 148 mgd (see ~~b~~c.ii. Monitoring and Field Studies and Resultant Critical/~~d~~Design ~~f~~Flows, in this section for further details) and the permitted year-round discharge flow of 19.1 mgd, a dilution credit of up to 7.7:1 may be allowed for the year-round tertiary discharge. Agricultural water quality criteria dilution credits have been used in the calculation of the WQBELs for molybdenum for the year-round tertiary discharge.

For molybdenum, the WQBELs based on a 7.7:1 dilution credit are an AMEL and MDEL of 44 µg/L and 87 µg/L, respectively. Section 1.4.2.2 of the SIP requires that, "*A mixing zone shall be as small as practicable.*", and Section 1.4.2.2.B requires, *"The RWQCB shall deny or significantly limit a mixing zone and dilution credits as necessary to protect beneficial uses, meet the conditions of this Policy, or comply with other regulatory requirements."* Based on the Discharger's updated mixing zone study, a 7.7:1 dilution credit results in a mixing zone that extends 24,897 meters downstream for the year-round tertiary discharge. Based on existing Facility performance, the Facility can meet a performance-based MDEL of 23 µg/L (1.8:1 dilution), which correlates to a mixing zone that extends 86.7 meters downstream. This represents a mixing zone that is as small as practicable for this Facility and that fully complies with the SIP.

Furthermore, the Central Valley Water Board finds that granting of the full dilution credits could allocate an unnecessarily large portion of the receiving water's assimilative capacity for molybdenum and could violate the Antidegradation Policy. Although the Antidegradation Policy does not apply within a mixing zone, the allowance of a mixing zone allows an increase in the discharge of pollutants. Therefore, when a mixing zone and dilution credits are allowed, it is necessary to ensure the discharge complies with the Antidegradation Policy outside the mixing zone. The Antidegradation Policy requires that a discharge

shall meet best practicable treatment or control (BPTC), which in this case for molybdenum is, at minimum, existing facility performance. Allowing the full dilution credit would allow the Discharger to increase its loading of molybdenum to the San Joaquin River and reduce the treatment and control of the pollutant. Allowing the Discharger to reduce the level of treatment and/or control would not comply with the BPTC requirements of the Antidegradation Policy.

In addition, a less stringent effluent limit cannot be allowed due to federal antibacksliding regulations. Therefore, this Order carries forward the final MDEL of 23 µg/L for molybdenum from the previous Order. Consequently, for the tertiary discharge, a dilution credit of 1.8:1 is allowed for molybdenum, with a mixing zone that extends 23.4 meters downstream of the discharge.

Dilution credits allowed in this Order are in accordance with Section 1.4.2.2 of the SIP. The allowance of a mixing zone and dilution credits are a discretionary act by the Central Valley Water Board. The Central Valley Water Board has determined that the maximum dilution credits on a constituent-by-constituent basis needed for this discharge are as shown in Table F-6, below.

Table F-6. Mixing Zones and Dilution Credits Allowed

	Dilution Credit Allowed	Mixing Zone Length
Human Carcinogen Criteria Mixing Zone		
Secondary Discharge	**20:1**	**1,218 m**
Tertiary Discharge	**N/A**	**N/A**
Agricultural Criteria Mixing Zone		
Secondary Discharge	**1.8:1**	**23.4 m**
Tertiary Discharge	**1.8:1**	**86.7 m**

vi. **Regulatory Compliance for Dilution Credits and Mixing Zones.** To fully comply with all applicable laws, regulations and policies of the State, Central Valley Water Board approved a mixing zone and the associated dilution credits, shown in Table F-6, based on the following:

- Mixing zones are allowed under the SIP provided all elements contain in Section 1.4.2.2 are met. Based on the mixing zone study conducted by the Discharger the Central Valley Water Board has determined that these factors are met.

- Section 1.4.2.2.of the SIP requires mixing zones to be as small as practicable. Based on the mixing zone study conducted by the Discharger the Central Valley Water Board has determined the mixing zones are as small as practicable.

- In accordance with Section 1.4.2.2 of the SIP, the Board has determined the mixing zones are as small as practicable, will not compromise the integrity of the entire water body, restrict the passage of aquatic life, dominate the water body or overlap existing mixing zones from different outfalls. The mixing zones are small (approximately 23.4 to 1,218 meters downstream of the discharge) relative to the large size of the receiving water (approximately 366 miles), are not at or near a drinking water intake, and do not overlap a mixing zone from a different outfall.

- The Central Valley Water Board is allowing mixing zones for human carcinogen and agricultural criteria only and has determined allowing such mixing zones will not cause acutely toxic conditions to aquatic life passing through the mixing zones.

- The Central Valley Water Board has determined the discharge will not adversely impact biologically sensitive or critical habitats, including, but not limited to, habitat of species listed under the federal or State endangered species laws, because the mixing zones are for human carcinogen and agricultural criteria only, are relatively small, and acutely toxic conditions will not occur in the mixing zones. The discharge will not produce undesirable or nuisance aquatic life, result in floating debris, oil, or scum, produce objectionable odor, taste, or turbidity, cause objectionable bottom deposits, or cause nuisance, because the Order establishes end-of-pipe effluent limitations (e.g., for ammonia, BOD_5, and TSS) and discharge prohibitions to prevent these conditions from occurring.

- As required by the SIP, in determining the extent of or whether to allow mixing zones and dilution credits, the Central Valley Water Board has considered the presence of pollutants in the discharge that are carcinogenic, mutagenic, teratogenic, persistent, bioaccumulative, or attractive to aquatic organisms, and concluded that the allowance of the mixing zones and dilution credits are adequately protective of the beneficial uses of the receiving water.

- The Central Valley Water Board has determined the mixing zones comply with the SIP for priority pollutants.

- The mixing zone study indicates the maximum allowed dilution factors for agricultural criteria to be 7.7:1 and 20:1 for the year-round tertiary and season secondary discharges, respectively. Section 1.4.2.2.B of the SIP, in part states, *"The RWQCB shall deny or significantly limit a*

mixing zone and dilution credits as necessary to protect beneficial uses, meet the conditions of this Policy, or comply with other regulatory requirements." The Central Valley Water Board has determined dilution factors of 7.7:1 and 20:1 are not needed or necessary for the Discharger to achieve compliance with this Order.

- The Central Valley Water Board has determined the mixing zones comply with the Basin Plan for non-priority pollutants. The Basin Plan requires a mixing zone not adversely impact beneficial uses. Beneficial uses will not be adversely affected for the same reasons discussed above. In determining the size of the mixing zones, the Central Valley Water Board has considered the procedures and guidelines in Section 5.1 of USEPA's *Water Quality Standards Handbook*, 2nd Edition (updated July 2007) and Section 2.2.2 of the TSD. The SIP incorporates the same guidelines.

- The Central Valley Water Board has determined that allowing dilution factors that exceed those required in this Order would not comply with the State Anti-degradation Policy for receiving waters outside the allowable mixing zone for molybdenum. The State Water Board established California's antidegradation policy in State Water Board Resolution No. 68-16. Resolution No. 68-16 incorporates the federal antidegradation policy and requires that existing quality of waters be maintained unless degradation is justified based on specific findings. Item 2 of Resolution 68-16 states:

  "Any activity which produces or may produce a waste or increased volume or concentration of waste and which dischargers or proposed to discharge to existing high quality waters will be required to meet waste discharge requirements which will result in the best practicable treatment or control of the discharge necessary to assure that (a) a pollution or nuisance will not occur and (b) the highest water quality consistent with maximum benefit to the people of the State will be maintained."

  The effluent limitations established in the Order for molybdenum that have been adjusted for dilution credits provided in Table F-6 were developed based on performance of the Discharger's current wastewater treatment capabilities. Therefore, the Central Valley Water Board determined the effluent limitations required by this Order will result in the Discharger implementing best practicable treatment or control of the discharge necessary to assure that pollution or nuisance will not occur and the highest water quality consistent with maximum benefit to the people of the State will be maintained. The Central Valley Water Board also determined the Discharger will be in immediate compliance with the effluent limitations,

The Central Valley Water Board also determined establishing effluent limitations for molybdenum that have been adjusted for dilution credits provided in Table F-6 is consistent with Section 1.4.2.2.B of the SIP that requires the Central Valley Water Board shall deny or significantly limit a mixing zone and dilution credits as necessary to comply with other regulatory requirements.

- Therefore, the Central Valley Water Board has determined the effluent limitations established in the Order for molybdenum that have been adjusted for dilution credits provided in Table F-6 are appropriate and necessary to comply with the Basin Plan, SIP, Federal anti-degradation regulations and Resolution 68-16.

d. Conversion Factors. The CTR contains aquatic life criteria for arsenic, cadmium, chromium III, chromium VI, copper, lead, nickel, silver, and zinc which are presented in dissolved concentrations. USEPA recommends conversion factors to translate dissolved concentrations to total concentrations. Except for copper as explained below, the default USEPA conversion factors contained in Appendix 3 of the SIP were used to convert the applicable dissolved criteria to total recoverable criteria.

The SIP, section 1.4.1, allows the Discharger to complete a defensible site-specific translator study, and propose site-specific dissolved to total recoverable translators. The Discharger conducted a copper translator study, and submitted the final results and recommendations to the Central Valley Water Board in May 2003, "City of Modesto Mixing Zone – Dilution & Copper Translator Study." The study report was updated in June 2007 to consider twenty additional sampling events. Based on EPA and SIP guidance, that report recommends a chronic translator of 0.5 and an acute translator of 0.70 based on secondary effluent data. The study also evaluated a site-specific translator using a mixture of receiving water and effluent, but this is not applicable for this Order because a mixing zone is not allowed for copper.

This Order allows copper site-specific translators for the secondary effluent of 0.5 (chronic criteria) and 0.70 (acute criteria). Since the Discharger has not conducted an analysis using the tertiary effluent or the receiving water, the USEPA default translators for copper (i.e., 0.96 for acute and chronic) have been used in this Order for the tertiary effluent and receiving water.

f. Hardness-Dependent CTR Metals Criteria. The California Toxics Rule and the National Toxics Rule contain water quality criteria for seven metals that vary as a function of hardness. The lower the hardness the lower the water quality criteria. The metals with hardness-dependent criteria include cadmium, copper, chromium III, lead, nickel, silver, and zinc.

This Order has established the criteria for hardness-dependent metals based on the reasonable worst-case ambient hardness as required by the SIP[1] , the CTR[2] and State Water Board Order No. WQO 2008-0008 (City of Davis). The SIP and the CTR require the use of "receiving water" or "actual ambient" hardness, respectively, to determine effluent limitations for these metals. (SIP, § 1.2; 40 CFR § 131.38(c)(4)) The CTR does not define whether the term "ambient," as applied in the regulations, necessarily requires the consideration of upstream as opposed to downstream hardness conditions. Therefore, where reliable, representative data are available, the hardness value for calculating criteria can be the downstream receiving water hardness, after mixing with the effluent (Order WQO 2008-0008, p. 11). The Central Valley Water Board thus has considerable discretion in determining ambient hardness (Id., p.10).

As discussed below, scientific literature provides a reliable method for calculating protective hardness-dependent CTR criteria, considering all discharge conditions. This methodology produces hardness-dependent CTR criteria based on the reasonable worst-case downstream ambient hardness that ensure these metals do not cause receiving water toxicity under any downstream receiving water condition. Under this methodology, the Central Valley Water Board considers all hardness conditions that could occur in the ambient downstream receiving water after the effluent has mixed with the water body[3]. This ensures that effluent limitations are fully protective of aquatic life in all areas of the receiving water affected by the discharge under all flow conditions, at the fully mixed location, and throughout the water body including at the point of discharge into the water body.

i. **Conducting the Reasonable Potential Analysis (RPA).** The SIP in Section 1.3 states, "The RWQCB shall…determine whether a discharge may: (1) cause, (2) have a reasonable potential to cause, or (3) contribute to an excursion above any applicable priority pollutant criterion or objective." Section 1.3 provides a step-by-step procedure for conducting the RPA. The procedure requires the comparison of the Maximum Effluent Concentration (MEC) and Maximum Ambient Background Concentration to the applicable criterion that has been properly adjusted for hardness. Unless otherwise noted, for the hardness-dependent CTR metals criteria the following procedures were followed for properly adjusting the criterion for hardness when conducting the RPA.

a) The SIP requires water quality-based effluent limitations (WQBELs) if the MEC is equal to or exceeds the applicable criterion, adjusted for

[1] The SIP does not address how to determine the hardness for application to the equations for the protection of aquatic life when using hardness-dependent metals criteria. It simply states, in Section 1.2, that the criteria shall be properly adjusted for hardness using the hardness of the receiving water.

[2] The CTR requires that, for waters with a hardness of 400 mg/L (as CaCO3), or less, the actual ambient hardness of the surface water must be used. It further requires that the hardness values used must be consistent with the design discharge conditions for design flows and mixing zones.

[3] All effluent discharges will change the ambient downstream metals concentration and hardness. It is not possible to change the metals concentration without also changing the hardness.

hardness. For comparing the MEC to the applicable criterion, the "fully mixed" reasonable worst-case downstream ambient hardness was used to adjust the criterion. In this evaluation the portion of the receiving water affected by the discharge is analyzed. For hardness-dependent criteria, the hardness of the effluent has an impact on the determination of the applicable criterion in areas of the receiving water affected by the discharge. Therefore, for comparing the MEC to the applicable criterion, the reasonable worst-case downstream ambient hardness was used to adjust the criterion. For this situation it is necessary to consider the hardness of the effluent in determining the applicable hardness to adjust the criterion. The procedures for determining the applicable criterion after proper adjustment using the reasonable worst-case downstream ambient hardness is outlined in subsection ii, below.

b) The SIP requires WQBELs if the receiving water is impaired upstream (outside the influence) of the discharge, i.e., if the Maximum Ambient Background Concentration of a pollutant exceeds the applicable criterion, adjusted for hardness[1]. For comparing the Maximum Ambient Background Concentration to the applicable criterion, the reasonable worst-case upstream ambient hardness was used to adjust the criteria. This is appropriate, because this area is outside the influence of the discharge. Since the discharge does not impact the upstream hardness, the effect of the effluent hardness was not included in this evaluation.

ii. **Calculating Water Quality-Based Effluent Limitations.** The remaining discussion in this section relates to the development of WQBELs when it has been determined that the discharge has reasonable potential to cause or contribute to an exceedance of the CTR hardness-dependent metals criteria in the receiving water.

A 2006 Study[2] developed procedures for calculating the effluent concentration allowance (ECA)[3] for CTR hardness-dependent metals. The 2006 Study demonstrated that it is necessary to evaluate all discharge conditions (e.g. high and low flow conditions) and the hardness and metals concentrations of the effluent and receiving water when determining the appropriate ECA for these hardness-dependent metals. This method is superior to relying on downstream receiving water samples alone because it captures all possible mixed conditions in the receiving water. Both receiving water and effluent hardness vary based on flow and other factors, but the variability of receiving water and effluent hardness is

[1] The pollutant must also be detected in the effluent.
[2] Emerick, R.W.; Borroum, Y.; & Pedri, J.E., 2006. California and National Toxics Rule Implementation and Development of Protective Hardness Based Metal Effluent Limitations. WEFTEC, Chicago, Ill.
[3] The ECA is defined in Appendix 1 of the SIP (page Appendix 1-2). The ECA is used to calculate WQBELs in accordance with Section 1.4 of the SIP.

sometimes independent. Using a calculated hardness value ensures that the Central Valley Water Board considers all possible mixed downstream values that may result from these two independent variables. Relying on receiving water sampling alone is less likely to capture all possible mixed downstream conditions.

The equation describing the total recoverable regulatory criterion, as established in the CTR[1] , is as follows:

$$\text{CTR Criterion} = \text{WER} \times (e^{m[\ln(H)]+b}) \qquad \text{(Equation 1)}$$

Where:

H = hardness (as $CaCO_3$)[2]
WER = water-effect ratio
m, b = metal- and criterion-specific constants

In accordance with the CTR, the default value for the WER is 1. A WER study must be conducted to use a value other than 1. The constants "m" and "b" are specific to both the metal under consideration, and the type of total recoverable criterion (i.e., acute or chronic). The metal-specific values for these constants are provided in the CTR at paragraph (b)(2), Table 1.

The equation for the ECA is defined in Section 1.4, Step 2, of the SIP and is as follows:

$$\text{ECA} = C \qquad (\text{when } C \leq B)^{3} \qquad \text{(Equation 2)}$$

Where:

C = the priority pollutant criterion/objective, adjusted for hardness (see Equation 1, above)

B = the ambient background concentration

The 2006 Study demonstrated that the relationship between hardness and the calculated criteria is the same for some metals, so the same procedure for calculating the ECA may be used for these metals. The same procedure can be used for chronic cadmium, chromium III, copper, nickel, and zinc. These metals are hereinafter referred to as "Concave Down Metals". "Concave Down" refers to the shape of the curve represented by the relationship between hardness and the CTR criteria in Equation 1. Another similar procedure can be used for determining the

[1] 40 CFR § 131.38(b)(2).
[2] For this discussion, all hardness values are in mg/L as $CaCO_3$.
[3] The 2006 Study assumes the ambient background metals concentration is equal to the CTR criterion (i.e. C ≤ B)

ECA for acute cadmium, lead, and acute silver, which are referred to hereafter as "Concave Up Metals".

ECA for Chronic Cadmium, Chromium III, Copper, Nickel, and Zinc – For Concave Down Metals (i.e., chronic cadmium, chromium III, copper, nickel, and zinc) the 2006 Study demonstrates that when the effluent is in compliance with the CTR criteria and the upstream receiving water is in compliance with the CTR criteria, any mixture of the effluent and receiving water will always be in compliance with the CTR criteria[1]. The 2006 Study proves that regardless of whether the effluent hardness is lower or greater than the upstream hardness, the reasonable worst-case flow condition is the effluent dominated condition (e.g., no receiving water flow or the receiving water near the discharge point prior to the effluent mixing with the receiving water)[2] . Consequently, for Concave Down Metals, the CTR criteria have been calculated using the downstream ambient hardness under this condition.

The secondary effluent hardness ranged from 136 mg/L to 327 mg/L, based on 37 samples from October 2006 to March 2011. The upstream receiving water hardness varied from 48 mg/L to 450 mg/L, based on 83 samples from November 2006 to January 2011. Under the effluent dominated condition, the reasonable worst-case downstream ambient hardness is ~~128~~ 136 mg/L. As demonstrated in the example shown in Table F-7~~4~~, below, using this hardness to calculate the ECA for all Concave Down Metals will result in WQBELs that are protective under all flow conditions, from the effluent dominated condition to the high flow condition. This example for zinc assumes the following conservative conditions for the upstream receiving water:

- Upstream receiving water always at the lowest observed upstream receiving water hardness (i.e., 48 mg/L)
- Upstream receiving water zinc concentration always at the CTR criteria (i.e., no assimilative capacity).

Using these reasonable worst-case receiving water conditions, a simple mass balance (as shown in Equation 3, below) accounts for all possible mixtures of effluent and receiving water under all flow conditions.

$$C_{MIX} = C_{RW} \times (1\text{-}EF) + C_{Eff} \times (EF) \qquad \text{(Equation 3)}$$

Where:

[1] 2006 Study, p. 5700

[2] There are two typographical errors in the 2006 Study in the discussion of Concave Down Metals when the effluent hardness is less than the receiving water hardness. The effluent and receiving water hardness were transposed in the discussion, but the correct hardness values were used in the calculations. The typographical errors were confirmed by the author of the 2006 Study, by email dated 1 April 2011, from Dr. Robert Emerick to Mr. James Marshall, Central Valley Water Board.

C_{MIX} = Mixed concentration (e.g. metals or hardness)
C_{RW} = Upstream receiving water concentration
C_{Eff} = Effluent concentration
EF = Effluent Fraction

In this example, for zinc, for any receiving water flow condition (high flow to low flow), the fully-mixed downstream ambient zinc concentration is in compliance with the CTR criteria[1].

[1] This method considers the actual lowest observed upstream hardness and actual lowest observed effluent hardness to determine the reasonable worst-case ambient downstream hardness under all possible receiving water flow conditions. Table F-74 demonstrates that the receiving water is always in compliance with the CTR criteria at the fully-mixed location in the receiving water. It also demonstrates that the receiving water is in compliance with the CTR criteria for all mixtures from the point of discharge to the fully-mixed location. Therefore, a mixing zone is not used for compliance.

Table F-74: Zinc ECA Evaluation for the Secondary Effluent

Lowest Observed Effluent Hardness					**136 mg/L (as $CaCO_3$)**
Lowest Observed Upstream Receiving Water Hardness					**48 mg/L (as $CaCO_3$)**
Highest Assumed Upstream Receiving Water Zinc Concentration					**64.3 µg/L[1]**
Zinc $ECA_{chronic}$[2]					**155.5 µg/L**
Effluent Fraction[6]		**Fully Mixed Downstream Ambient Concentration**			
		Hardness[3] (mg/L)	**CTR Criteria[4] (µg/L)**	**Zinc[5] (µg/L)**	**Complies with CTR Criteria**
High Flow	1%	48.8	65.3	65.2	**Yes**
	5%	52.4	69.3	68.9	**Yes**
	15%	61.2	79.0	78.0	**Yes**
	25%	70	88.6	87.1	**Yes**
	50%	92	111.6	109.9	**Yes**
	75%	114	133.9	132.7	**Yes**
Low Flow	100%	136	155.5	155.5	**Yes**

1 Highest assumed upstream receiving water zinc concentration calculated using Equation 1 for chronic criterion at a hardness of **48 mg/L**.

2 ECA calculated using Equation 1 for chronic criterion at a lowest observed effluent hardness of **136 mg/L**.

3 Fully mixed downstream ambient hardness is the mixture of the receiving water and effluent hardness at the applicable effluent fraction using Equation 3.

4 Fully mixed downstream ambient criteria are the chronic criteria calculated using Equation 1 at the mixed hardness.

5 Fully mixed downstream ambient zinc concentration is the mixture of the receiving water and effluent zinc concentrations at the applicable effluent fraction using Equation 3.

6 The effluent fraction ranges from 1% at the high receiving water flow condition, to 100% at the lowest receiving water flow condition (i.e., effluent dominated).

ECA for Acute Cadmium, Lead, and Acute Silver – For Concave Up Metals (i.e., acute cadmium, lead, and acute silver), the relationship between hardness and the metals criteria is different than for Concave Down Metals. The 2006 Study demonstrates that for Concave Up Metals, the effluent and upstream receiving water can be in compliance with the CTR criteria, but the resulting mixture may contain metals concentrations that exceed the CTR criteria and could cause toxicity. For these metals, the 2006 Study provides a mathematical approach to calculate the ECA that is protective of aquatic life, in all areas of the receiving water affected by the discharge, under all discharge and receiving water flow conditions (see Equation 4, below).

The ECA, as calculated using Equation 4, is based on the reasonable worst-case upstream receiving water hardness, the lowest or highest observed effluent hardness, and assuming no receiving water assimilative capacity for metals (i.e., ambient background metals concentrations are at their respective CTR criterion). Equation 4 is not used in place of the CTR equation (Equation 1). Rather, Equation 4, which is derived using the CTR equation, is used as a direct approach for calculating the ECA. This

replaces an iterative approach for calculating the ECA. The CTR equation has been used to evaluate the receiving water downstream of the discharge at all discharge and flow conditions to ensure the ECA is protective (e.g., see Table F 5).

$$ECA = \left(\frac{m(H_e - H_{rw})\left(e^{m\{\ln(H_{rw})\}+b}\right)}{H_{rw}} \right) + e^{m\{\ln(H_{rw})\}+b} \qquad \text{(Equation 4)}$$

Where:

m, b	=	criterion specific constants (from CTR)
H_e	=	lowest observed effluent hardness
H_{rw}	=	reasonable worst-case upstream receiving water hardness (lowest or highest observed)

An example similar to the Concave Down Metals is shown for lead, a Concave Up Metal, in Table F-8~~5~~, below. As previously mentioned, the lowest effluent hardness is 136 mg/L, while the upstream receiving water hardness ranged 48 mg/L to 450 mg/L, based on 83 samples from November 2006 to January 2011. In this case, the reasonable worst-case upstream receiving water hardness to use in Equation 4 to calculate the ECA is ~~48~~ 400 mg/L[1].

Using the procedures discussed above to calculate the ECA for all Concave Up Metals will result in WQBELs that are protective under all potential effluent/receiving water flow conditions (high flow to low flow) and under all known hardness conditions, as demonstrated in Table F-8~~5~~, for lead.

[1] For the evaluation of Concave Up metals, it is necessary to consider the highest and lowest observed upstream receiving water hardness. For lead, the reasonable worst-case condition is when the highest observed upstream hardness (i.e., 400 mg/L as $CaCO_3$) is used, which results in an ECA of 2.97 µg/L for lead. Using the lowest observed upstream receiving water hardness (i.e., 48 mg/L as $CaCO_3$) results in an ECA of 4.17 µg/L. Although the highest observed hardness was 450 mg/L, the CTR equation limits hardness to a maximum of 400 mg/L.

Table F-8~~5~~: Lead ECA Evaluation for the Secondary Effluent

Lowest Observed Effluent Hardness	**136 mg/L**
Reasonable Worst-case Upstream Receiving Water Hardness	**48~~0~~00 mg/L**
Reasonable Worst-case Upstream Receiving Water Lead Concentration	**~~1.2~~18.6 µg/L[1]**
Lead $ECA_{chronic}$[2]	**2.97 µg/L**

Effluent Fraction[6]		**Fully Mixed Downstream Ambient Concentration**			
		Hardness[3] (mg/L) (as $CaCO_3$)	**CTR Criteria[4] (µg/L)**	**Lead[5] (µg/L)**	**Complies with CTR Criteria**
High Flow	1%	397.4	18.4	18.4	**Yes**
	5%	386.8	17.8	17.8	**Yes**
	15%	360.4	16.3	16.2	**Yes**
	25%	334.0	14.8	14.7	**Yes**
	50%	268.0	11.2	10.8	**Yes**
	75%	202.0	7.8	6.9	**Yes**
Low Flow	100%	136.0	4.7	3.0	**Yes**

1 Reasonable worst-case upstream receiving water lead concentration calculated using Equation 1 for chronic criterion at a worse case upstream hardness of **40~~0~~8 mg/L**.

2 ECA calculated using Equation 4 for chronic criteria.

3 Fully mixed downstream ambient hardness is the mixture of the receiving water and effluent hardness at the applicable effluent fraction.

4 Fully mixed downstream ambient criteria are the chronic criteria calculated using Equation 1 at the mixed hardness.

5 Fully mixed downstream ambient lead concentration is the mixture of the receiving water and effluent lead concentrations at the applicable effluent fraction.

6 The effluent fraction ranges from 1% at the high receiving water flow condition, to 100% at the lowest receiving water flow condition (i.e., effluent dominated).

Based on the procedures discussed above, Table F-9~~6~~ lists all the CTR hardness-dependent metals and the associated ECA used in this Order.

Table F-9~~6~~. Summary of ECA Evaluations for CTR Hardness-dependent Metals

CTR Metals	ECA (µg/L, total recoverable)	
	acute	chronic
Copper	19/26[1]	12/23[1]
Chromium III	2200	270
Cadmium	5.6	3.1
Lead	76	3.0
Nickel	610	70
Silver	4.8	--
Zinc	160	160

[1] Tertiary/Secondary. This is due to a site-specific metals translator for copper that only applies to the secondary effluent (see Section IV.C.2.d).

3. Determining the Need for WQBELs

a. The Central Valley Water Board conducted the RPA in accordance with section 1.3 of the SIP. Although the SIP applies directly to the control of CTR priority pollutants, the State Water Board has held that the Regional Water Board may use the SIP as guidance for water quality-based toxics control.[1] The SIP states in the introduction "*The goal of this Policy is to establish a standardized approach for permitting discharges of toxic pollutants to non-ocean surface waters in a manner that promotes statewide consistency*." Therefore, in this Order the RPA procedures from the SIP were used to evaluate reasonable potential for both CTR and non-CTR constituents based on information submitted as part of the application, in studies, and as directed by monitoring and reporting programs.

b. Constituents with Limited Data. Reasonable potential cannot be determined for the following constituents because effluent data are limited or ambient background concentrations are not available. The Discharger is required to continue to monitor for these constituents in the effluent using analytical methods that provide the best feasible detection limits. When additional data become available, further analysis will be conducted to determine whether to add numeric effluent limitations or to continue monitoring.

[1] See Order WQO 2001-16 (Napa) and Order WQO 2004-0013 (Yuba City).

i. Diazinon and Chlorpyrifos

(a) WQO. The Central Valley Water Board recently completed a total maximum daily load (TMDL) for chlorpyrifos and diazinon in the San Joaquin River and amended the Basin Plan to include chlorpyrifos and diazinon waste load allocations and water quality objectives on 21 October 2005. The Basin Plan now contains water quality objectives for chlorpyrifos of 0.025 µg/L as a 1-hour average and 0.015 µg/L as a 4-day average and diazinon of 0.16 µg/L as a 1-hour average and 0.10 µg/L as a 4-day average for the San Joaquin River from Mendota Dam to Vernalis. The Basin Plan also states that "[c]*ompliance with the applicable water quality objectives, load allocations, and waste load allocations for diazinon and chlorpyrifos in the San Joaquin River Rivers is required by 1 December 2010*" and "[I]*n determining compliance with the waste load allocations, the Regional Water Board will consider any data or information submitted by the discharger regarding diazinon and chlorpyrifos inputs from sources outside of the jurisdiction of the permitted discharger, including in any diazinon and chlorpyrifos present in precipitation, and other available relevant information; and any applicable provisions in the discharger's NPDES permit requiring the discharger to reduce the discharge of pollutants to the maximum extent possible.*"

(b) RPA Results.

<u>Secondary Effluent</u>
All monitoring results from 10 samples, 4 for chlorpyrifos and 6 for diazinon collected for between February 2009, and March 2011 were below the method detection limit; therefore, the ambient concentration was set to the lowest of the individual reported method detection limits, which was 0.1µg/L. However, the lowest method detection level for chlorpyrifos and diazinon was 0.05 µg/L, which is above the criterion of 0.015 µg/L and therefore, the reasonable potential analysis for the secondary-level treated effluent is inconclusive. Additionally, all monitoring results for 2011 data have method detection and reporting levels of 0.3 µg/L and 0.5 µg/L, respectively.

<u>Tertiary Effluent</u>
There is only one data point for a diazinon sample collected from the tertiary-level treated effluent on 9 August 2011. The result was below the method detection limit. Therefore, at this point there is not sufficient data for a reasonable potential analysis.

(c) WQBELs.

Regardless of the fact that an RPA cannot be conducted due to limited data, the TMDL for diazinon and chlorpyrifos for the SJR includes waste load allocations that must be implemented in this Order.

Therefore, this Order includes effluent limits in accordance with the TMDL, which are as follows:

Effluent chlorpyrifos and diazinon concentrations shall not exceed the sum of one as defined below:

i. Average Monthly Effluent Limit

$$S_{AMEL} = \frac{C_{D\text{-}avg}}{0.08} + \frac{C_{C\text{-}avg}}{0.012} \leq 1.0$$

$C_{D\text{-}avg}$ = average monthly diazinon effluent concentration in µg/L
$C_{C\text{-}avg}$ = average monthly chlorpyrifos effluent concentration in µg/L

ii. Maximum Daily Effluent Limit

$$S_{MDEL} = \frac{C_{D\text{-}max}}{0.16} + \frac{C_{C\text{-}max}}{0.025} \leq 1.0$$

$C_{D\text{-}max}$ = maximum daily diazinon effluent concentration in µg/L
$C_{C\text{-}max}$ = maximum daily chlorpyrifos effluent concentration in µg/L

(d) Plant Performance and Attainability. Diazinon and chlorpyrifos has not been detected in the effluent and there is no expectation that it is in the discharge, because these pesticides have been banned. The Central Valley Water Board concludes that immediate compliance with these effluent limitations is feasible.

c. Constituents with No Reasonable Potential. WQBELs are not included in this Order for constituents that do not demonstrate reasonable potential; however, monitoring for those pollutants is established in this Order as required by the SIP. If the results of effluent monitoring demonstrate reasonable potential, this Order may be reopened and modified by adding an appropriate effluent limitation.

i. Mercury

(a) WQO. The current NAWQC for protection of freshwater aquatic life, continuous concentration, for mercury is 0.77 µg/L (30-day average, chronic criteria). The CTR contains a human health criterion (based on a threshold dose level causing neurological effects in infants) of 0.050 µg/L for waters from which both water and aquatic organisms are consumed. Both values are controversial and subject to change. In 40 CFR Part 131, USEPA acknowledges that the human health criteria may not be protective of some aquatic or endangered species and that "…*more stringent mercury limits may be determined and implemented*

through use of the State's narrative criterion." In the CTR, USEPA reserved the mercury criteria for freshwater and aquatic life and may adopt new criteria at a later date. The Delta methylmercury TMDL does not apply to the San Joaquin River in the vicinity of the discharge.

(b) RPA Results.

Secondary Effluent
The maximum observed effluent mercury concentration was 0.0041 µg/L, based on 7 samples collected between February 2009, and March 2011.

Tertiary Effluent
The MEC for mercury was 0.003 µg/L, based on 7 samples collected between May 2011, and August 2011.

The secondary and tertiary discharges do not have reasonable potential to cause or contribute to an exceedances of the applicable water quality criteria in the receiving water.

The San Joaquin River (Merced River to Tuolumne) has been listed as an impaired water body pursuant to Section 303(d) of the Clean Water Act, because of mercury. Mercury bioaccumulates in fish tissue, and therefore, the discharge of mercury to the receiving water may contribute to exceedances of the narrative toxicity objective and impacts on beneficial uses. A TMDL for mercury in the San Joaquin River is proposed to be developed and completed by 2016. Because the San Joaquin River has been listed as an impaired water body for mercury, the discharge must not cause or contribute to increased mercury levels. Section 2.1.1. of the SIP states that for bioaccumulative priority pollutants for which the receiving water is impaired, "…*the RWQCB should consider whether the mass loading of the bioaccumulative pollutant(s) should be limited to representative, current levels pending TMDL development in order to implement the applicable water quality standard.*" The previous Order included a performance-based annual mass loading limit for mercury, due to the fact that mercury bioaccumulates in fish tissue and the receiving water is impaired for mercury.

(c) WQBELs.

Although there is no reasonable potential, the previous Order included a performance-based annual mass loading limit for mercury, due to the fact that mercury bioaccumulates in fish tissue and the receiving water is impaired for mercury. There is no new information to allow removal of the loading limits that would satisfy the exceptions to the federal antibacksliding regulations. Consequently, this Order carries forward the annual mass loading limit from the previous Order of 1.16 lbs of

mercury/ year. A reopener provision allows this Order to be reopened to modify the mercury effluent limits, as needed, if the SJR mercury TMDL is adopted.

(d) Plant Performance and Attainability. Based on effluent mercury data it appears the Discharger can immediately comply with the effluent limits for mercury. The Central Valley Water Board concludes that immediate compliance with these effluent limitations is feasible.

ii. Persistent Chlorinated Hydrocarbon Pesticides.

(a) WQO.

Alpha BHC (alpha-hexachlorocyclohexane), aldrin, beta endosulfan, beta BHC, heptachlor, lindane (gamma BHC), beta BHC, delta BHC, 4,4'-DDD, 4,4'-DDE, 4,4'-DDT, chlordane, dieldrin, endrin, endrin aldehyde, alpha endosulfan, endosulfan sulfate, heptachlor, heptachlor epoxide, and toxaphene are chlorinated hydrocarbon pesticides. DDT and Group A pesticides (aldrin, dieldrin, endrin, heptachlor, heptachlor epoxide, chlordane (total), hexachlorocyclohexane (total), endosulfan (total), and toxaphene) are identified on the California 303(d) List as pollutants of impairment of the SJR. DDT has been historically used as an insecticide, and the primary source of DDT noted in the 1998 303(d) List is agriculture. The source of Group A pesticides is also identified as agricultural use. Although banned from general use in 1972, scientific evidence suggests that DDT is both persistent and bioaccumulative in the environment. The Basin Plan requires that no individual pesticides shall be present in concentrations that adversely affect beneficial uses; discharges shall not result in pesticide concentrations in bottom sediments or aquatic life that adversely affect beneficial uses; total chlorinated hydrocarbon pesticides shall not be present in the water column at detectable concentrations; and pesticide concentrations shall not exceed those allowable by applicable antidegradation policies. The CTR contains numeric criteria for alpha BHC, aldrin, beta BHC, heptachlor, and lindane of 0.0039 µg/L, 0.00013 µg/L, 0.014 µg/L, 0.00021 µg/L, and 0.019 µg/L, respectively, for freshwaters from which both water and organisms are consumed. The CTR contains numeric criteria for beta endosulfan of 0.056 µg/L as a four-day average (chronic) and 0.22 µg/L as a one-hour average (acute) for the protection of freshwater aquatic life.

(b) RPA Results.

The secondary effluent was monitored for 2 of the 7 persistent hydrocarbon pesticides, dieldrin and endrin. Dieldrin, endrin, and PCBs were monitored twice, once in 2009 and once in 2010 (monitoring sample frequency for priority pollutants is required once per year) during the period from February 2009, through February

2010. Results of effluent monitoring conducted by the Discharger indicate concentrations of Group A pesticides and DDT have been less than detectable levels, at laboratory minimum levels (ML's) specified by the SIP; therefore, there is no reasonable potential and this Order does not contain effluent limitations for these constituents.

iii. Selenium.

(a) WQO.

Table III-1of the Basin Plan contains water quality objectives for selenium in the SJR, from the mouth of the Merced River to Vernalis, as a maximum (total) concentration of 12 µg/l and a four-day maximum average objective of 5 µg/l. These water quality objectives were established for protection of aquatic life**.** USEPA also established CTR criteria for the protection of freshwater aquatic life for selenium. The CTR continuous concentration (four-day average) and the maximum concentration (one-hour average) criteria for selenium are 5.0 µg/l and 20 µg/l, respectively.

(b) RPA Results.

The maximum observed upstream receiving water selenium concentration was 2.3 µg/L (9 March 2011), based on results of 13 samples.

<u>Secondary Effluent</u>
Results of monitoring from February 2009 through March 2010 indicate the MEC for selenium was 2.3 µg/L based on 13 effluent samples. Based on the effluent and receiving water data, there is no reasonable potential to cause or contribute to an in-stream excursion above the applicable water quality criteria/objectives for selenium.

<u>Tertiary Effluent</u>
The MEC for selenium was 1.9 µg/L, based on 7 samples collected between May 2011 and August 2011. Therefore, based on this data, selenium in the tertiary effluent discharge has no reasonable potential to cause or contribute to an in-stream excursion above the applicable water quality criteria/objectives for selenium.

The previous Order contained final maximum daily and average monthly effluent limitations for selenium (total) of 8.2 µg/L and 4.1 µg/L respectively, for the secondary and tertiary discharges. The discharge no longer demonstrates reasonable potential based on the new data, so the limits have been removed. The removal of effluent limits is

consistent with the federal antibacksliding regulations, because the additional data represents new data that was not available at the time the previous Order was adopted, and the removal of selenium effluent limits for the secondary discharge is consistent with the state and federal Antidegradation requirements.

d. Constituents with Reasonable Potential. The Central Valley Water Board finds that the secondary discharge has a reasonable potential to cause or contribute to an in-stream excursion above a water quality standard for aluminum, ammonia, carbon tetrachloride, chlorodibromomethane, copper, dichlorobromomethane, iron, manganese, molybdenum, total residual chlorine, and electrical conductivity. The Central Valley Water Board finds that the tertiary discharge has a reasonable potential to cause or contribute to an in-stream excursion above a water quality standard for aluminum, ammonia, copper, iron, manganese, molybdenum, and electrical conductivity. WQBELs for these constituents are included in this Order. A summary of the RPA is provided in Attachment G, and a detailed discussion of the RPA for each constituent is provided below.

i. Aluminum

(a) WQO. The Code of Federal Regulations promulgated criteria for priority toxic pollutants for California's surface waters as part of section 131.38 Establishment of Numeric Criteria for Priority Toxic Pollutants for the State of California (California Toxics Rule or CTR), including metals criteria. Freshwater aquatic life criteria for metals are expressed as a function of total hardness. However, aluminum criteria were not promulgated as part of the CTR. Absent numeric aquatic life criteria for aluminum, WQBEL's in the Central Valley Water Board's NPDES permits are based on the Basin Plan's narrative toxicity objective.

The Basin Plan's *Policy for Application of Water Quality Objectives* requires the Central Valley Water Board to consider, "*on a case-by-case basis, direct evidence of beneficial use impacts, all material and relevant information submitted by the discharger and other interested parties, and relevant numerical criteria and guidelines developed and/or published by other agencies and organizations. In considering such criteria, the Board evaluates whether the specific numerical criteria which are available through these sources and through other information supplied to the Board, are relevant and appropriate to the situation at hand and, therefore, should be used in determining compliance with the narrative objective.*" Relevant information includes, but is not limited to the following: (1) USEPA Guidelines for Deriving Numerical National Water Quality Criteria for the Protection of Aquatic Organisms and Their Uses, (2) USEPA National Recommended Ambient Water Quality Criteria (NAWQC), (3) NAWQC–Correction~~, (4) the Arid West Water Quality Research Project~~

~~and Reports~~, and (~~5~~4) site-specific aluminum studies conducted by dischargers within the Central Valley Region. (Basin Plan, p. IV.-17.00; *see also,* 40 CFR 122.44(d)(vi).)

For aluminum, this Order implements the Basin Plan's narrative toxicity objective and the narrative chemical constituents objective for protection of the aquatic life and domestic and municipal supply beneficial uses. USEPA developed National Recommended Ambient Water Quality Criteria (NAWQC) for protection of freshwater aquatic life for aluminum (1988). The recommended 4-day average (chronic) and 1-hour average (acute) criteria for aluminum are 87 µg/L and 750 µg/L, respectively, for waters with a pH of 6.5 to 9.0. The NAWQC can be used to implement the Basin Plan's narrative toxicity objective. In addition, the Secondary Maximum Contaminant Level - Consumer Acceptance Limit for aluminum is 200 µg/L, which implements the Basin Plan's narrative chemical constituents objective.

In April 1999, USEPA released the National Recommended Water Quality Criteria–Correction. There were no corrections to the 1988 aluminum recommended criteria; however, USEPA recognized that they were aware of field data indicating that many high quality waters in the U.S. contain more than 87 µg/L aluminum, when either total recoverable or dissolved is measured (i.e., the higher levels of aluminum did not affect beneficial uses). Therefore, Footnote L to the National Recommended Ambient Water Quality Criteria summary table for aluminum indicated a water effects ratio (WER) might be appropriate for implementation of its recommended chronic criterion for aluminum to protect aquatic organisms. (*National Recommended Water Quality Criteria–Correction (April 1999*).) ~~USEPA explained that the chronic aquatic life criterion is based on studies (USEPA 1988, Table 5-6, "Other Data on Effects of Aluminum on Aquatic Organisms"), conducted under specific receiving water conditions with a low pH (6.5 to 6.8 pH units) and low hardness (<10 mg/L as $CaCO_3$) using the test species brook trout (*Salvelinus fontinalis*) and striped bass (*Morone saxatilis*)[4].~~

Although striped bass may be present in the receiving water in the vicinity of the discharge, monitoring data demonstrates that the study conditions are not similar to those in San Joaquin River, which consistently has a higher upstream hardness, ranging from 48 to 450 mg/L and higher pH, ranging from 7.0 to 8.9 standard units. Because the hardness in the SJR are higher (which decreases the toxic effects

~~[4] Moreover, the Technical Report states that these two toxicity studies were deemed inappropriate by the USEPA for inclusion in the 1988 USEPA Aluminum chronic database used in calculating the USEPA 1988 NAWQC, but were still used by USEPA to reduce the calculated final chronic value (FCV) from 750 to 87 µg/L in the 1988 recommended criteria for aluminum (pp. 3-3 to 3-4, *Evaluation of the EPA Recalculation Procedure in the Arid West Technical Report,* May 2006).~~

to aquatic life) than the water hardness values in which the criterion was developed, USEPA advises that a water effects ratio (WER) might be appropriate to better reflect the actual toxicity of aluminum to aquatic organisms.

In April 2005, the Discharger completed a Phase I Water-Effects Ratio Study (WER) for aluminum, and on 11 November 2005, submitted the results in its *Aluminum Water-Effect Ratio Study Plan*. The Phase ~~1~~ I WER study consisted of range-finding toxicity tests, in which the NOEC, LOEC, and EC_{50}[1] were determined for the species *Daphnia magna, Ceriodaphnia dubia, and Rainbow Trout*. For this initial range-finding test, side-by-side testing with laboratory water was not conducted. However, to obtain an estimate of the potential WER for the Modesto WWTP effluent, the EC_{50} values determined for the site water were divided by the Species Mean Acute Value (SMAV) available in the aluminum criteria document according to EPA's streamlined WER procedure[2]. According to the EPA streamlined procedure, two WERs are determined by dividing site water WERs with both the laboratory dilution water EC_{50} and the SMAV; the final WER of the sample is the lesser of the two. The estimated WERs calculated using the SMAVs are presented in the table below:

Species	Site Water EC_{50} for Total Al (ug/L)	SMAV (ug/L Al)	WER
Daphnia magna	31604	38.2	827
Ceriodaphnia dubia	>11900[1]	1.9	6263
Rainbow Trout	>34250[1]	10.39	3296

[1] The 2001 EPA streamlined procedures states that a "greater than" value for the EC50 in the site water is interpreted as "equal to" in calculating the WER.

The Modesto Phase I WER study is not sufficient to calculate a WER, however, the preliminary results confirm the conditions of San Joaquin River are not similar to the EPA study conditions for the development of the USEPA recommended chronic criterion. The chronic criterion is overly stringent and is not appropriate to use to interpret the Basin Plan's narrative toxicity objective.

In addition, on 12 April 2007, the City of Manteca completed a Phase II aluminum WER study for the SJR near its discharge point, which is downstream of the City of Modesto. The Manteca Phase II WER study, which may be used to calculate a WER for the City of Manteca's discharge, indicated that a WER of 22.7 can be applied to the chronic criterion for aluminum (resulting in a chronic criterion of 22.7 x 87 ug/L

[1] The NOEC is the "no observed effect concentration", the LOEC is the "lowest observed effect concentration", and the EC_{50} is the concentration that caused an effect to 50% of the test organisms. See Attachment A for more detailed definitions.

[2] USEPA. 2001. Streamlined Water-Effect Ratio Procedure for Discharges of Copper. Office of Water. EPA-822-R-01-005. March.

= 1975 ug/L). Since the characteristics of the river (e.g. hardness and pH) near Manteca are similar to those near Modesto, the results of the Manteca WER study put into question the applicability of the overly stringent chronic criterion recommended by the NAWQC for aluminum.

Based on best professional judgment considering the site-specific conditions of the receiving water (e.g., hardness and pH), the Modesto Phase I WER Study, and the Manteca Phase II WER Study, the Central Valley Water Board finds that the NAWQC chronic criterion for aluminum is overly stringent and should not be used to interpret the narrative toxicity objective for this discharge. Therefore, the USEPA's NAWQC acute criterion for the protection of freshwater aquatic life, and the Department of Public Health's secondary Maximum Contaminant Level for aluminum were used to determine reasonable potential and calculate the final effluent limits for aluminum.

(b) RPA Results.

Secondary Effluent The maximum effluent concentration (MEC) for aluminum was 370 µg/L, based on 13 samples collected between February 2009 and March 2011, while the maximum observed upstream receiving water concentration was 2800 µg/L, based on 16 samples collected between February 2009 and March 2011. Therefore, aluminum in the seasonal secondary effluent discharge has a reasonable potential to cause or contribute to an in-stream excursion above the Secondary MCL of 200 µg/L and the USEPA acute criterion of 750 µg/L.

Tertiary Effluent The maximum effluent concentration (MEC) for aluminum was 61 µg/L based on 8 samples collected between May 2011 and August 2011, while the maximum observed upstream receiving water concentration was 2800 µg/L, based on 16 samples collected between February 2009 and March 2011. Therefore, aluminum in the year-round tertiary effluent discharge has a reasonable potential to cause or contribute to an in-stream excursion above the Secondary MCL of 200 µg/L and the USEPA acute criterion of 750 µg/L.

(c) WQBELs.

Secondary Effluent This Order contains final Average Monthly Effluent Limitations (AMEL) and Maximum Daily Effluent Limitations (MDEL) for aluminum of 457 µg/L and 750 µg/L, respectively, based on the acute criterion recommended in USEPA's NAWQC for the protection of freshwater aquatic life (See Attachment H for WQBEL calculations). This Order also includes an annual average effluent limitation of 200 µg/L, based on the Secondary MCL, for protection of the MUN beneficial use.

Tertiary Effluent The same seasonal secondary effluent discharge limits will apply to the year-round tertiary effluent. Based on the preliminary data results from the tertiary it appears the compliance schedule for aluminum may be dependent of the Phase 2 upgrade for the tertiary design capacity of 14.9 MGD expected by February 2018.

(e) Plant Performance and Attainability. Analysis of the tertiary effluent data shows that the MEC 60 µg/L is less than the applicable WQBELs, therefore, immediate compliance is achievable. However, the annual average concentrations for the secondary effluent for 2010 and 2011 were 243 and 263 µg/L, respectively, which exceeds the annual average effluent limit of 200 µg/L. Based on the sample results for the effluent, the limitations appear to put the Discharger in immediate non-compliance. New or modified control measures may be necessary in order to comply with the effluent limitations, and the new or modified control measures cannot be designed, installed and put into operation within 30 calendar days. Therefore, a compliance time schedule for compliance with the aluminum effluent limitations is established in TSO No. R5-2012-**XXXX** in accordance with CWC section 13300, that requires preparation and implementation of a pollution prevention plan in compliance with CWC section 13263.3.

ii. Ammonia

(a) WQO. The NAWQC for the protection of freshwater aquatic life for total ammonia, recommends acute (1-hour average; criteria maximum concentration or CMC) standards based on pH and chronic (30-day average; criteria continuous concentration or CCC) standards based on pH and temperature. USEPA also recommends that no 4-day average concentration should exceed 2.5 times the 30-day CCC. USEPA found that as pH increased, both the acute and chronic toxicity of ammonia increased. Salmonids were more sensitive to acute toxicity effects than other species. However, while the acute toxicity of ammonia was not influenced by temperature, it was found that invertebrates and young fish experienced increasing chronic toxicity effects with increasing temperature. Because the San Joaquin River has a beneficial use of cold freshwater habitat and the presence of salmonids and early fish life stages in the San Joaquin River is well-documented, the recommended criteria for waters where salmonids and early life stages are present were used.

(b) RPA Results. Per Section 1.3, Step 7, of the SIP, the facility type may be used as information to aid in determining if a water quality based effluent limitation is required. The Discharger is a POTW that treats domestic wastewater. Untreated domestic wastewater contains ammonia. Nitrification is a biological process that converts ammonia to nitrite and nitrite to nitrate. Denitrification is a process that converts nitrate to nitrite or nitric oxide and then to nitrous oxide or nitrogen gas,

which is then released to the atmosphere. The Discharger does not currently use nitrification to remove ammonia from the waste stream. However, the Phase 2 upgrade includes the biological nutrient removal that nitrifies and denitrifies the wastewater. Inadequate or incomplete nitrification may result in the discharge of ammonia to the receiving stream. Ammonia is known to cause toxicity to aquatic organisms in surface waters. Discharges of ammonia would violate the Basin Plan narrative toxicity objective. The Seasonal Secondary and Year-Round Tertiary discharges have reasonable potential to cause or contribute to an instream exceedance of the Basin Plan't narrative toxicity objective.

(c) WQBELs. The Central Valley Water Board calculates WQBELs in accordance with SIP procedures for non-CTR constituents, and ammonia is a non-CTR constituent. The SIP procedure assumes a 4-day averaging period for calculating the long-term average discharge condition (LTA). However, USEPA recommends modifying the procedure for calculating permit limits for ammonia using a 30-day averaging period for the calculation of the LTA corresponding to the 30-day CCC. Therefore, while the LTAs corresponding to the acute and 4-day chronic criteria were calculated according to SIP procedures, the LTA corresponding to the 30-day CCC was calculated assuming a 30-day averaging period. The lowest LTA representing the acute, 4-day CCC, and 30-day CCC is then selected for deriving the average monthly effluent limitation (AMEL) and the maximum daily effluent limitation (MDEL). The remainder of the WQBEL calculation for ammonia was performed according to the SIP procedures.

<u>Secondary Effluent</u> The maximum permitted effluent pH is 8.5, as the Basin Plan objective for pH in the receiving stream is the range of 6.5 to 8.5. In order to protect against the worst-case short-term exposure of an organism, a pH value of 8.5 was used to derive the acute criterion. The resulting acute criterion is 2.1 mg/L.

The 30-day average chronic criterion (or CCC) was evaluated for the receiving water based on monitoring data obtained during the discharge season from the period of January 2010 through April 2011. The chronic criterion values were calculated using the CCC equation and the rolling 30-day average pH and temperature of the receiving water. 281 data values for the receiving water CCC were calculated. The 1/10th percentile (i.e. lowest 99.9th percentile) of each data set was selected as the most stringent criteria, which is consistent with the 1-in-3 year average frequency for criteria excursions recommended by the USEPA. As a result, the receiving water CCC was 1.46 mg/L ammonia as N. The same evaluation was conducted using effluent data for the February 2009 through April 2011 period, and the effluent CCC was 3.57 mg/L ammonia as N. Therefore, the receiving water CCC is the most stringent criterion and was used for development of water quality-based effluent limitations for ammonia.

The 4-day average concentration is derived in accordance with the USEPA criterion as 2.5 times the 30-day CCC. Based on a 30-day CCC of 1.46 mg/L (as N), the 4-day average concentration that should not be exceeded is 3.65 mg/L (as N).

Tertiary Effluent The same seasonal secondary effluent discharge limits will apply to the year-round tertiary effluent. Based on the preliminary data results from the tertiary it appears the compliance schedule for ammonia is dependent on the Phase 2 upgrade for the tertiary design capacity of 14.9 MGD.

(d) Plant Performance and Attainability. Analysis of the secondary effluent data shows that the MEC of 17.1 mg/L exceed than the applicable WQBELs. Based on the sample results for the effluent, the limitations appear to put the Discharger in immediate non-compliance for the secondary effluent. New or modified control measures may be necessary in order to comply with the effluent limitations, and the new or modified control measures cannot be designed, installed and put into operation within 30 calendar days. The Discharger submitted an infeasibility analysis on 30 January 2012. As discussed in section IV.E of this Fact Sheet, a compliance schedule has been included in this Order for the secondary effluent. The tertiary facilities are designed to fully nitrify the wastewater, so immediate compliance with the ammonia limits is feasible. There is no compliance schedule for ammonia for the tertiary effluent.

iii. Boron. (see Subsection xvi. Salinity)

iv. Carbon Tetrachloride.

(a) WQO. The CTR includes a carbon tetrachloride criterion of 0.25 µg/L for the protection of human health and is based on a one-in-a-million cancer risk for waters from which both water and organisms are consumed.

(b) RPA Results. No carbon tetrachloride has been detected in the ambient receiving water, based on 4 samples collected between January 2007 and February 2010.

Secondary Effluent
The MEC for carbon tetrachloride was 3.4 µg/L, based on 34 samples collected between January 2007, and March 2011; therefore, the discharge has a reasonable potential to cause or contribute to an in-stream excursion above the CTR criterion for carbon tetrachloride. Data from 2007 to 2011 was used for the RPA due to insufficient data with acceptable MDLs and RLs since adoption of the previous Order.

Tertiary Effluent

The MEC for carbon tetrachloride was non-detect with a maximum detection limit of 0.3 µg/L, based on 7 samples collected between May 2011 and August 2011; therefore, the RPA was inconclusive in determining if the discharge has a reasonable potential to cause or contribute to an in-stream excursion above the CTR criterion for carbon tetrachloride. Since carbon tetrachloride has not been measured in the influent and is known to be formed during the chlorination process, the year-round tertiary discharge does not have reasonable potential to cause or contribute to an exceedances of the CTR criterion for carbon tetrachloride in the SJR.

(c) WQBELs. Results of ambient monitoring indicate the SJR has assimilative capacity for carbon tetrachloride. Since there are no drinking water intakes in the vicinity of Discharge Point 001, and discharge of the secondary effluent can only occur when the river:flow ratio is 20:1, a dilution credit for chlorodibromomethane of up to 20:1 can be granted for the seasonal secondary discharge, based on the available human health dilution (see Attachment F, IV.C.2.b.).

Secondary Effluent Section 1.4.3.2 of the SIP states that the arithmetic mean shall be calculated using the reported detection limits for samples that are reported below detection limits. The minimum method detection level for the receiving water carbon tetrachloride samples was 0.04 µg/L, and therefore, the arithmetic mean concentration is 0.04 µg/L. An AMEL and MDEL for carbon tetrachloride of 4.1 µg/L and 13 µg/L, respectively, are included in this Order for the Seasonal Discharge based on the CTR criterion for the protection of human health (See Attachment H).

(d) Plant Performance and Attainability. Analysis of the secondary effluent data shows that the MEC of 3.4 µg/L is less than the applicable WQBELs. The Central Valley Water Board concludes, therefore, that immediate compliance with these effluent limitations is feasible.

v. Chlorine Residual.

(a) WQO. USEPA developed NAWQC for protection of freshwater aquatic life for chlorine residual. The recommended 4-day average (chronic) and 1-hour average (acute) criteria for chlorine residual are 0.011 µg/L and 0.019 µg/L, respectively. These criteria are protective of the Basin Plan's narrative toxicity objective.

(b) RPA Results. The Discharger uses chlorine for disinfection for the seasonal secondary discharge, which is extremely toxic to aquatic organisms. The Discharger uses a sulfur dioxide process to dechlorinate the effluent prior to discharge to SJR. Due to the existing chlorine use and the potential for chlorine to be discharged, the

discharge has a reasonable potential to cause or contribute to an in-stream excursion above the NAWQC.

For the year-round discharge, the tertiary treated effluent will be disinfected using UV disinfection, no chlorine will be used for disinfection. Based on this information, the tertiary-level treated effluent does not have reasonable potential to discharge chlorine to the SJR.

(c) WQBELs. The USEPA *Technical Support Document for Water Quality-Based Toxics Control* [EPA/505/2-90-001] contains statistical methods for converting chronic (4-day) and acute (1-hour) aquatic life criteria to average monthly and maximum daily effluent limitations based on the variability of the existing data and the expected frequency of monitoring. However, because chlorine is an acutely toxic constituent that can and will be monitored continuously, an average 1-hour limitation is considered more appropriate than an average daily limitation. For the seasonal secondary discharge, this Order contains a 4-day average effluent limitation and 1-hour average effluent limitation for chlorine residual of 0.011 µg/L and 0.019 µg/L, respectively, based on USEPA's NAWQC, which implements the Basin Plan's narrative toxicity objective for protection of aquatic life.

(d) Plant Performance and Attainability. Based on the analysis of the secondary effluent, the Central Valley Water Board concludes that immediate compliance with these effluent limitations is feasible.

vi. Chlorodibromomethane.

(a) WQO. The CTR includes a chlorodibromomethane criterion of 0.41 µg/L for the protection of human health and is based on a one-in-a-million cancer risk for waters from which both water and organisms are consumed.

(b) RPA Results. All SJR monitoring results from 16 samples collected between February 2009 and March 2011 were below the method detection limit; therefore, the maximum background ambient concentration was set to the lowest of the individual reported method detection limits, which was 0.16 µg/L.

The MEC for chlorodibromomethane for the seasonal secondary discharge was 6.94µg/L, based on 13 samples collected between February 2009 and March 2011. Therefore, the seasonal secondary discharge has a reasonable potential to cause or contribute to an in-stream excursion above the CTR criterion for chlorodibromomethane. However, since chlorodibromomethane is a disinfection byproduct caused by the use of chlorine, and the year-round tertiary treated effluent will be disinfected using UV disinfection, not chlorination, the

year-round tertiary treated effluent is not expected to contain chlorodibromomethane. Therefore, there is no reasonable potential for the year-round tertiary treated effluent to cause or contribute to an in-stream excursion above the CTR criterion for chlorodibromomethane.

(c) WQBELs.

Results of ambient monitoring indicate the SJR has assimilative capacity for chlorodibromomethane. Since there are no drinking water intakes in the vicinity of Discharge Point 001, and discharge of the secondary effluent can only occur when the river:flow ratio is 20:1, a dilution credit for chlorodibromomethane of up to 20:1 can be granted for the seasonal 70 mgd, based on the available human health dilution (see Attachment F, IV.C.2.b.). An AMEL and MDEL for chlorodibromomethane of 5.4 µg/L and 15 µg/L, respectively, are included in this Order for the secondary treated effluent discharge based on the CTR criterion for the protection of human health (See Attachment G for WQBEL calculations). No effluent limitations are required for the year-round tertiary treated effluent.

(d) Plant Performance and Attainability. Analysis of the secondary effluent data shows that the maximum monthly average concentration of 4.2 µg/L is less than the AMEL and the MEC of 6.94 µg/L is less than the MDEL. The Central Valley Water Board concludes, therefore, that immediate compliance with these effluent limitations is feasible.

vii. Copper.

(a) WQO. The CTR includes hardness-dependent criteria for the protection of freshwater aquatic life for copper. These criteria for copper are presented in dissolved concentrations. USEPA recommends conversion factors to translate dissolved concentrations to total concentrations. Default USEPA translators (i.e., 0.96 for acute and chronic criteria) were used for the receiving water and tertiary effluent. However, as discussed in Section IV.C.2.d, above, site-specific translators have been used for the secondary effluent of 0.5 (chronic criteria) and 0.7 (acute criteria).

(b) RPA Results. Section IV.C.2.f includes procedures for conducting the RPA for copper. The maximum observed upstream receiving water copper concentration was 16 µg/L, based on 16 samples collected between February 2009 and March 2011. Based on the lowest observed upstream receiving water hardness of 48 mg/L (as $CaCO_3$) the applicable total recoverable criteria for evaluating the ambient background concentration, are 5.0 µg/L and 7.0 µg/L, for the chronic and acute criteria respectively. Based on this data, the maximum

ambient copper concentration exceeds the applicable criteria. Since copper is detected in the effluent, the discharge has reasonable potential to cause or contribute to an exceedances of the CTR criteria for copper in the SJR and WQBELs are required.

Secondary Effluent
As discussed in Section IV.C.2.f for comparing the MEC to the criteria, the reasonable worst-case downstream ambient hardness should be used. Based on a hardness of 136 mg/L (as $CaCO_3$), and the site-specific objectives for the secondary effluent, the applicable chronic criterion (maximum four-day average concentration) is 23 µg/L, as total recoverable, and the applicable acute criterion (maximum one-hour average concentration) is 26 µg/L, as total recoverable. The MEC for copper (total) was 17 µg/L, based on 13 samples collected between February 2009 and March 2011. Based on this data, the MEC does not exceed the applicable criteria.

Tertiary Effluent
For the tertiary effluent the applicable total recoverable criteria are 12 µg/L and 19 µg/L, for the chronic and acute criteria, respectively. The MEC for copper (total) was 1.6 µg/L, based on 8 samples collected between May 2011 and August 2011. Based on this data, the MEC does not exceed the applicable criteria.

(c) WQBELs.

Secondary Effluent
This Order contains final AMEL and MDEL for copper of 15 µg/L and 26 µg/L, respectively, based on the CTR criteria (See Attachment G for WQBEL calculations).

Tertiary Effluent
This Order contains final AMEL and MDEL for copper of 9.5 µg/L and 19.0 µg/L, respectively, based on the CTR criteria (See Attachment G for WQBEL calculations).

(d) Plant Performance and Attainability. Analysis of the secondary effluent data shows that the MEC of 16 µg/L exceeds the new AMEL for copper. Based on the sample results for the effluent, the limitations appear to put the Discharger in immediate non-compliance for the secondary effluent. New or modified control measures may be necessary in order to comply with the effluent limitations, and the new or modified control measures cannot be designed, installed and put into operation within 30 calendar days. Furthermore, the effluent limitations for copper are a new regulatory requirement within this permit, which becomes applicable to the waste discharge with the adoption of this Order, which was adopted after 1 July 2000.

Therefore, a compliance time schedule for compliance with the copper effluent limitations for the secondary discharge is established in TSO No. R5-2012-**XXXX** in accordance with CWC section 13300, that requires preparation and implementation of a pollution prevention plan in compliance with CWC section 13263.3. Based on tertiary effluent data, it appears the Facilty can immediately comply with the tertiary effluent limits for copper.

viii. Dichlorobromomethane

(a) WQO. The CTR includes a dichlorobromomethane criterion of 0.56 µg/L for the protection of human health and is based on a one-in-a-million cancer risk for waters from which both water and organisms are consumed.

(b) RPA Results. All SJR monitoring results from 16 samples collected between February 2009 and March 2011 were below the method detection limit; therefore, the maximum background ambient concentration was set to the lowest of the individual reported method detection limits, which was 0.14 µg/L.

Secondary Effluent
The MEC for dichlorobromomethane was 2.55 µg/L, based on 13 samples collected between February 2009 and March 2011. The MEC exceeds the CTR criterion, therefore, the discharge has a reasonable potential to cause or contribute to an in-stream excursion above the CTR criterion for dichlorobromomethane.

Tertiary Effluent
No dichlorobromomethane has been detected in effluent, based on 7 samples collected between May 2011 and August 2011. The lowest method detection level for chlorodibromomethane was <0.48 µg/L, which is less than the criterion of 0.56 µg/L. Additionally, since dichlorobromomethane is a disinfection byproduct caused by the use of chlorine, and the year-round tertiary treated effluent will be disinfected using UV disinfection, not chlorination, the year-round tertiary treated effluent is not expected to contain dichlorobromomethane. Therefore, there is no reasonable potential for the year-round tertiary treated effluent to cause or contribute to an in-stream excursion above the CTR criterion for dichlorobromomethane.

(c) WQBELs.

Secondary Effluent
Since there are no drinking water intakes in the vicinity of Discharge Point 001, and discharge of the secondary effluent can only occur when the river:flow ratio is 20:1, a dilution credit for dichlorobromomethane of up

to 20:1 can be granted for the seasonal 70 mgd, based on the available human health dilution (see Section IV.C.2.b.). An AMEL and MDEL for dichlorobromomethane of 9.0 µg/L and 13.0 µg/L, respectively, are included in this Order for the secondary treated effluent discharge based on the CTR criterion for the protection of human health (See Attachment G for WQBEL calculations).

Tertiary Effluent
No effluent limitations are required for the year-round tertiary treated effluent.

(d) Plant Performance and Attainability. Analysis of the effluent data shows that the MEC of 2.55 µg/L is less than the applicable WQBELs. The Central Valley Water Board concludes, therefore, that immediate compliance with these effluent limitations is feasible.

ix. Electrical Conductivity (see Salinity, section xvi)

x. Iron.

(a) WQO. The Secondary MCL - Consumer Acceptance Limit for iron is 300 µg/L.

(b) RPA Results. The maximum observed upstream receiving water iron concentration (total) was 3600 µg/L, and the average upstream receiving water iron concentration was 1969 µg/L based on 16 samples collected between February 2009 and March 2011. The SJR has exceeded the Secondary MCL for iron and iron has been detected in the secondary and tertiary effluents, therefore, the discharge has reasonable potential to cause or contribute to an instream exceedance of the secondary MCL for iron in the receiving water.

Secondary Effluent
The MEC for iron (total) was 460 µg/L, based on 13 samples collected between February 2009 and March 2011. Therefore, the discharge has a reasonable potential to cause or contribute to an in-stream excursion above the Secondary MCL for iron.

Tertiary Effluent
The MEC for iron (total) was 77 µg/L, based on 8 samples collected between May 2011 and August 2011.

(c) WQBELs. Due to no assimilative capacity, dilution credits are not allowed for development of the WQBELs for iron. This Order contains a final average annual effluent limitation (AAEL) of 300 µg/L for iron based on secondary MCL and applies to the secondary and tertiary discharges.

(d) Plant Performance and Attainability. Analysis of the effluent data shows that the maximum annual average iron concentration of 308 µg/L in the secondary effluent is greater than applicable WQBELs. Based on the sample results for the effluent, the limitations appear to put the Discharger in immediate non-compliance. New or modified control measures may be necessary in order to comply with the effluent limitations, and the new or modified control measures cannot be designed, installed and put into operation within 30 calendar days. Therefore, a compliance time schedule for compliance with the iron effluent limitations is established in TSO R5-2012-XXXX in accordance with Water Code section 13300, that requires preparation and implementation of a pollution prevention plan in compliance with Water Code section 13263.3.

xi. Manganese.

(a) WQO. The Secondary MCL - Consumer Acceptance Limit for manganese is 50 µg/L.

(b) RPA Results.

Secondary Effluent
The MEC for manganese was 31µg/L, based on 13 samples collected between February 2009, and March 2011, while the maximum observed ambient receiving water manganese concentration was 290 µg/L, based on 2 samples collected between February 2009, and March 2010. Therefore, the discharge has a reasonable potential to cause or contribute to an in-stream excursion above the Secondary MCL for manganese.

Tertiary Effluent
The MEC for manganese was 27 µg/L, based on 8 samples collected between May 2011, and August 2011. Since the receiving water has exceeded the Secondary MCL for manganese and manganese has been detected in the tertiary effluent, the discharge has a reasonable potential to cause or contribute to an in-stream excursion above the Secondary MCL for manganese.

(c) WQBELs.

The receiving water has exceeded the Secondary MCL for manganese. Therefore, no assimilative capacity is available in the receiving water for manganese. An AAEL of 50 µg/L for manganese is included in this Order for the secondary and tertiary discharges based on the secondary MCL.

(d) Plant Performance and Attainability. Analysis of the secondary and tertiary effluent data shows that the maximum annual average concentrations are less than the AAEL. The Central Valley Water Board concludes, therefore, that immediate compliance with these effluent limitations is feasible.

xii. Molybdenum.

(a) WQO. Table III-1 of the Basin Plan identifies site objectives for molybdenum in the SJR, from the mouth of the Merced River to Vernalis. The maximum (total) concentration objective for molybdenum is identified as 15 µg/L, with a maximum monthly mean objective of 10 µg/L. These objectives were established considering irrigated agricultural water quality goals for molybdenum.

(b) RPA Results.

Staff evaluated background receiving water data from January 2008 to March 2011 for the RPA. However, in 2008 the City began using a lower quality laboratory that has significantly higher reporting levels (RLs). The RL for the 2000-2007 data was 0.25 µg/L, however, the RL for the most recent data was 500 µg/L. With a RL of 500 µg/L, all data from January 2008 to March 2011 was j-flagged (MDL is 3 µg/L) and the precision of the estimates was not sufficient to determine the maximum background ambient concentration for the RPA. Therefore, molybdenum data from the Grassland Bypass Project for samples collected in the SJR at the Crows Landing site were used. Based on background receiving water data from 10 samples collected from June 2010 and June 2011, the maximum background concentration was 5.6 µg/L and the average was 2.96 µg/L the receiving water did not exceed the site-specific objectives for molybdenum.

Secondary Effluent
The MEC for molybdenum (total) in the secondary effluent was 21 µg/L, based on 67 samples collected between January 2004 and May 2007. Therefore, the discharge has a reasonable potential to cause or contribute to an in-stream excursion above the Basin Plan objective for molybdenum.

Tertiary Effluent
The MEC for molybdenum (total) in the tertiary effluent was an estimated value of 14 µg/L (j-flag). However, the RL for all the tertiary effluent discharge data was 500 µg/L. With a RL of 500 µg/L, all data was j-flagged (MDL is 1 µg/L) and the precision of the estimates is not sufficient to determine if there is a reasonable potential to cause or contribute to an in-stream excursion above the of the site-specific Basin Plan objective for molybdenum. There is insufficient data to conduct the RPA for the tertiary effluent.

(c) WQBELs.

Secondary Effluent
~~Considering a 20:1 dilution credit for molybdenum, an AMEL and MDEL of 98 µg/L and 203 µg/L, respectively was calculated. However, the Central Valley Water Board finds that granting of these dilution credits could~~

~~allocate an unnecessarily large portion of the receiving water's assimilative capacity for molybdenum and could violate the Antidegradation Policy. For this reason, a performance-based effluent limitation is included in this Order. This Order~~ As discussed in Section IV.C.2.c, this Order allows a dilution credit of 1.8:1 for molybdenum and carries forward the final MDEL of 23 µg/L for molybdenum from the previous Order.

Tertiary Effluent
Although the data was insufficient to conduct the RPA for the tertiary discharge, the previous Order included a final effluent limit for molybdenum. Due to federal antibacksliding requirements~~egulations~~, this Order also carries forward the final MDEL of 23 µg/L for molybdenum from the previous Order.

(d) Plant Performance and Attainability. Analysis of the secondary and tertiary effluent data shows that the MEC of 21 µg/L is less than the MDEL. The Central Valley Water Board concludes, therefore, that immediate compliance with these effluent limitations is feasible.

xiii. Nitrite and Nitrate

(a) WQO. DPH has adopted Primary MCLs for the protection of human health for nitrite and nitrate that are equal to 1 mg/L and 10 mg/L (measured as nitrogen), respectively. DPH has also adopted a primary MCL of 10,000 µg/L for the sum of nitrate and nitrite, measured as nitrogen.

USEPA has developed a primary MCL and an MCL goal of 1,000 µg/L for nitrite (as nitrogen). For nitrate, USEPA has developed Drinking Water Standards (10,000 µg/L as Primary MCL) and NAWQC for protection of human health (10,000 µg/L for non-cancer health effects). Recent toxicity studies have indicated a possibility that nitrate is toxic to aquatic organisms.

(b) RPA Results.

Secondary Effluent
Based on 17 samples collected from 12 February 2009, through 22 March 2011, the MEC for nitrite was 0.485 mg/L, and the MEC for nitrate was 8.86 mg/L, therefore, there is no reasonable potential for the secondary discharge to cause or contribute to an in-stream excursion above the MCLs.

Tertiary Effluent
The biological treatment system for the new tertiary facility is not operational, therefore, there is no data for nitrate or nitrite. A new RPA cannot be performed.

(c) WQBELs.

Secondary Effluent
The previous Order included an effluent limit for Nitrate of 42 mg/L (as N), which allowed for dilution. Based on the additional effluent data that shows no reasonable potential, the effluent limits for the secondary discharge have been removed in this Order. This is consistent with the federal antibacksliding regulations, because the additional data represents new data that was not available at the time the previous Order was adopted. The removal of nitrate effluent limits for the secondary discharge is consistent with the state and federal Antidegradation requirements.

Tertiary Effluent
The new tertiary facility includes nitrification/denitrification processes, which should reduce nitrate and nitrite concentrations below the applicable water quality objectives. However, inadequate or incomplete denitrification may result in the discharge of elevated levels of nitrate and nitrite to the receiving water. Furthermore, the Discharger conducted an antidegradation analysis for the expanded discharge assuming a projected median nitrate concentration of 7.2 mg/L as N and projected median nitrite concentration of 0.8 mg/L as N. Thus, this Order contains AMELs for nitrite plus nitrate of 10 mg/L, for the year-round tertiary discharge based on the MCLs. ~~These~~ This effluent limitation is included in this Order to assure the treatment process adequately nitrifies and denitrifies the waste stream to protect the potential beneficial use of municipal and domestic supply.

(d) Plant Performance and Attainability. The Central Valley Water Board concludes that immediate compliance with these effluent limitations is feasible, because the tertiary facilities are designed to remove nitrate to levels less than the WQBELs.

xiv. Pathogens

When developing NPDES permits, the Regional Water Board implements recommendations by DPH for the appropriate disinfection requirements for the protection of MUN, REC-1, and AGR. The disinfection requirements in the proposed Order implement the DPH recommendations and are fully protective of the beneficial uses of the receiving water.

(a) WQO. In a letter to the Central Valley Water Board dated 8 April 1999, DPH indicated it would consider wastewater discharged to water bodies with identified beneficial uses of irrigation or contact recreation and where the wastewater receives dilution of more than 20:1 to be adequately disinfected if the effluent coliform concentration does not exceed 23 MPN/100 mL as a 7-day median and if the effluent coliform

concentration does not exceed 240 MPN/100 mL more than once in any 30 day period. The secondary discharge receives at least a 20:1 dilution, because this Order includes a discharge prohibition requiring a flow rate of 20:1 (receiving water to effluent) when discharging secondary effluent.

The year-round tertiary ~~effluent~~ discharge may at times receive less than 20:1 dilution. The DPH recommends treatment equivalent to Title 22 disinfected tertiary recycled water~~more stringent disinfection requirements~~ in these situations. DPH has developed reclamation criteria, CCR, Division 4, Chapter 3 (Title 22), for the reuse of wastewater. Title 22 requires that for spray irrigation of food crops, parks, playgrounds, schoolyards, and other areas of similar public access, wastewater be adequately disinfected, oxidized, coagulated, clarified, and filtered, and that the effluent total coliform levels not exceed 2.2 MPN/100 mL as a 7-day median. As coliform organisms are living and mobile, it is impracticable to quantify an exact number of coliform organisms and to establish weekly average limitations. Instead, coliform organisms are measured as a most probable number and regulated based on a 7-day median limitation.

Title 22 also requires that recycled water used as a source of water supply for non-restricted recreational impoundments be disinfected tertiary recycled water that has been subjected to conventional treatment. A non-restricted recreational impoundment is defined as *"…an impoundment of recycled water, in which no limitations are imposed on body-contact water recreational activities.*" Title 22 is not directly applicable to surface waters; however, the ~~Regional~~ Central Valley Water Board finds that it is appropriate to apply an equivalent level of treatment to that required by the Department of Public Health's reclamation criteria because the receiving water is used for irrigation of agricultural land and for contact recreation purposes. The stringent disinfection criteria of Title 22 are appropriate since the undiluted effluent may be used for the irrigation of food crops and/or for body-contact water recreation. Coliform organisms are intended as an indicator of the effectiveness of the entire treatment train and the effectiveness of removing other pathogens.

(b) RPA Results. The beneficial uses of the SJR include municipal and domestic supply, water contact recreation, and agricultural irrigation supply. To protect these beneficial uses, the Central Valley Water Board finds that the wastewater must be disinfected and adequately treated to prevent disease. The method of treatment is not prescribed by this Order; however, wastewater must be treated to a level equivalent to that recommended by DPH.

(c) WQBELs.

Secondary Effluent
Pursuant to guidance from DPH, this Order includes effluent limitations for total coliform organisms of 23 MPN/100 mL as a 7-day median and 240 MPN/100 mL, not to be exceeded more than once in a 30-day period. These coliform limits are imposed to protect the beneficial uses of the receiving water, including public health through contact recreation and drinking water pathways.

Tertiary Effluent
In accordance with the requirements of Title 22, this Order includes effluent limitations for total coliform organisms of 2.2 MPN/100 mL as a 7-day median; 23 MPN/100 mL, not to be exceeded more than once in a 30-day period; and 240 MPN/100 mL as an instantaneous maximum.

In addition to coliform limitations, operating specifications for~~a~~ turbidity ~~effluent limitation has~~have been included as a second indicator of the effectiveness of the treatment process and to assure compliance with the required level of treatment. The Facility uses membranes, which are ~~The tertiary treatment process, or equivalent, is~~ capable of reliably meeting a turbidity ~~limitation~~ of 0.2 nephelometric turbidity units (NTU) as a daily average. Failure of the membrane~~filtration~~ system such that virus removal is impaired would normally result in increased particles in the effluent, which result in higher effluent turbidity. Turbidity has a major advantage for monitoring membrane~~filter~~ performance, allowing immediate detection of membrane~~filter~~ failure and rapid corrective action. Coliform testing, by comparison, is not conducted continuously and requires several hours, to days, to identify high coliform concentrations. Therefore, to ensure compliance with equivalency to DPH recommended Title 22 disinfection criteria, ~~weekly average effluent limitations are impracticable for turbidity. T~~this Order includes operating specifications ~~effluent limitations~~ for turbidity of 0.2 NTU as a daily average; 0.5 NTU, not to be exceeded more than 5% of the time within a 24-hour period; and 1.0 NTU as an instantaneous maximum.

This Order contains effluent limitations, operating specifications, and requires a tertiary level of treatment, or equivalent, necessary to protect the beneficial uses of the receiving water. The ~~Regional~~ Central Valley Water Board has previously considered the factors in Water Code section 13241 in establishing these requirements.

(d) Plant Performance and Attainability. The Facility includes disinfection facilities that can comply with the WQBELs. The Central Valley Water Board concludes, therefore, that immediate compliance with these effluent limitations is feasible.

xv. pH

(a) WQO. The Basin Plan includes a water quality objective for surface waters (except for Goose Lake) that the "…pH shall not be depressed below 6.5 nor raised above 8.5."

(b) RPA Results. The discharge of treated domestic wastewater has a reasonable potential to cause or contribute to an excursion above the Basin Plan's numeric objectives for pH.

(c) WQBELs. Effluent limitations for pH of 6.5 as an instantaneous minimum and 8.5 as an instantaneous maximum are included in this Order based on protection of the Basin Plan objectives for pH.

(d) Plant Performance and Attainability. Based on available effluent pH data, it appears the Discharger is able to comply with these limitations. The Central Valley Water Board concludes, therefore, that immediate compliance with these effluent limitations is feasible.

xvi. Salinity

(a) WQO. The Basin Plan contains a chemical constituent objective that incorporates state MCLs, contains a narrative objective, and contains numeric water quality objectives for electrical conductivity, total dissolved solids, sulfate, and chloride. The Basin Plan also contains site-specific objectives for salinity for the San Joaquin River in the vicinity of the discharge. The USEPA Ambient Water Quality Criteria for Chloride recommends acute and chronic criteria for the protection of aquatic life. There are no USEPA water quality criteria for the protection of aquatic life for boron, electrical conductivity, total dissolved solids, and sulfate.

Table F-106. Salinity Water Quality Criteria/Objectives

Parameter	Agricultural WQ Goal[1]	Secondary MCL[3]	Basin Plan	USEPA NAWQC	Secondary Effluent		TertiaryEffluent	
					Avg	Max	Avg	Max
Boron (µg/L)	Varies[2]	N/A	0.8 – 2.6	N/A	254	280	970	1100
EC (µmhos/cm)	Varies[2]	900, 1600, 2200	700 (1 Apr-30 Sep) 1000 (1 Oct – 31 Mar)	N/A	1148	1500	1238	1940
TDS (mg/L)	Varies	500, 1000, 1500	N/A	N/A	612	692	796	1510
Sulfate (mg/L)	Varies	250, 500, 600	N/A	N/A	53	63	No Data	No Data
Chloride (mg/L)	Varies	250, 500, 600	N/A	860 (1-hr) 230 (4-day)	197	222	196	218

[1] Agricultural water quality goals based on *Water Quality for Agriculture*, Food and Agriculture Organization of the United Nations—Irrigation and Drainage Paper No. 29, Rev. 1 (R.S. Ayers and D.W. Westcot, Rome, 1985)

The EC level in irrigation water that harms crop production depends on the crop type, soil type, irrigation methods, rainfall, and other factors. An EC level of 700 µmhos/cm is generally considered to present no risk of salinity impacts to crops. However, many crops are grown successfully with higher salinities.

The secondary MCLs are stated as a recommended level, upper level, and a short-term maximum level.

(1) Boron. A TMDL is in place for the Lower San Joaquin River for Salt and Boron and a Basin Plan amendment was adopted by the Central Valley Water Board in September 2004. The Basin Plan includes site-specific objectives for the San Joaquin River, mouth of the Merced River to Vernalis as described below.

Basin Plan[1] Water Quality Objectives for Boron – San Joaquin River, mouth of the Merced River to Vernalis

AMEL (µg/L)	MDEL (µg/L)	Time period
0.8	2.0	15 March through 15 September
1.0	2.6	16 September through 14 March
1.3		Critical Year[2]

1 Table III-1, Section III-3.0 of the Water Quality Control Plan for the Sacramento and San Joaquin River Basins, revised on October 2011.

2 Relative to unimpaired runoff to Delta Based on 1922-1971 period (See Table IV-3 of the Basin Plan for more information).

(2) Chloride. The secondary MCL for chloride is 250 mg/L, as a recommended level, 500 mg/L as an upper level, and 600 mg/L as a short-term maximum. The recommended agricultural water quality goal for chloride, that would apply the narrative chemical constituent objective, is 106 mg/L as a long-term average based on Water Quality for Agriculture, Food and Agriculture Organization of the United Nations—Irrigation and Drainage Paper No. 29, Rev. 1 (R.S. Ayers and D.W. Westcot, Rome, 1985). The 106 mg/L water quality goal is intended to protect against adverse effects on sensitive crops when irrigated via sprinklers. USEPA Ambient Water Quality Criteria for Chloride recommends acute (1-hour) and chronic (4-day) criteria for the protection of freshwater aquatic life of 860 mg/L and 230 mg/L, respectively.

(3) Electrical Conductivity. A TMDL is in place for the Lower San Joaquin River for Salt and Boron and a Basin Plan amendment was adopted by the Central Valley Water Board in September 2004. The Basin Plan includes site-specific objectives for the lower SJR for EC of 700 µmhos/cm from 1 April – 30 September and 1000 µmhos/cm from 1 October – 31 March. The TMDL requires that POTWs comply with the water quality objectives for EC by 28 July 2022, for wet through dry years and 28 July 2026 for critical years.

(4) Sulfate. The secondary MCL for sulfate is 250 mg/L as a recommended level, 500 mg/L as an upper level, and 600 mg/L as a short-term maximum.

(5) Total Dissolved Solids. The secondary MCL for TDS is 500 mg/L as a recommended level, 1000 mg/L as an upper level, and 1500 mg/L as a short-term maximum. The recommended agricultural water quality goal for TDS, that would apply the narrative chemical constituent objective, is 450 mg/L as a long-term average based on Water Quality for Agriculture, Food and Agriculture Organization of the United Nations—Irrigation and Drainage Paper No. 29, Rev. 1 (R.S. Ayers and D.W. Westcot, Rome, 1985). Water Quality for Agriculture evaluates the impacts of salinity levels on crop tolerance and yield reduction, and establishes water quality goals that are protective of the agricultural uses. The 450 mg/L water quality goal is intended to prevent reduction in crop yield, i.e. a restriction on use of water, for salt-sensitive crops. Only the most salt sensitive crops require irrigation water of 450 mg/L or less to prevent loss of yield. Most other crops can tolerate higher TDS concentrations without harm, however, as the salinity of the irrigation water increases, more crops are potentially harmed by the TDS, or extra measures must be taken by the farmer to minimize or eliminate any harmful impacts.

(b) RPA Results.

(1) Boron. Background boron concentrations in SJR ranged from 840 µg/L to 1100 µg/L for 2 samples collected by the Discharger from February 2009 through February 2010. Boron concentrations in the effluent ranged from 210 µg/L to 280 µg/L, with an average of 254 µg/L for 13 samples collected by the Discharger from February 2009 through March 2011. The MEC did not exceed the Basin Plan site-specific objectives, however, the receiving water concentrations exceed the site-specific objectives for the San Joaquin River.

(2) Chloride. Background chloride concentrations in SJR were not available. Chloride concentrations in the effluent ranged from 183 mg/L to 222 mg/L, with an average of 200 mg/L for 13 samples collected by the Discharger from February 2009 through March 2011. These levels exceed the agricultural water goal. The control of salinity for protection of agricultural use is to be regulated in accordance with the TMDL for EC. The MEC did not exceed the USEPA NAWQC for protection of aquatic life, therefore, there is no reasonable potential to cause or contribute to an exceedance of the USEPA NAWQC for chloride and WQBELs are not necessary.

(3) Electrical Conductivity. A review of the Discharger's monitoring reports shows an average seasonal secondary effluent EC of 1148 µmhos/cm, with a range from 908 µmhos/cm to 1340 µmhos/cm

for 153 samples collected by the Discharger from May 2011 through September 2011. These levels exceed the site-specific objective for EC.

The average year-round tertiary effluent of EC was 955 µmhos/cm, with a range from 747 µmhos/cm to 1390 µmhos/cm for 47 samples collected by the Discharger from February 2009 through March 2011. These levels also exceed the site-specific objective for EC..

(4) Sulfate. Sulfate concentrations in the effluent ranged from 40.7 mg/L to 63.4 mg/L, with an average of 53.3 mg/L. These levels do not exceed the secondary MCL.

(5) Total Dissolved Solids. The average TDS effluent concentration was 633 mg/L with concentrations ranging from 600 mg/L to 680 mg/L, for 7 samples collected by the Discharger from February 2009 through March 2011. These levels exceed the applicable water quality objectives. The background receiving water TDS ranged from 260 mg/L to 1510 mg/L, with an average of 795.6 mg/L, for 16 samples collected by the Discharger from February 2009 through March 2011.

(c) WQBELs. This Order includes final WQBELs for EC based on the site-specific objectives in the Basin Plan in accordance with the Salt and Boron TMDL. An AMEL for EC of 700 µmhos/cm is required from 1 April – 30 September and an AMEL for EC of 1000 µmhos/cm is required from 1 October – 31 March. Per the TMDL, there are no WQBELs for boron, because compliance with the site-specific objectives for EC will result in compliance with the boron objectives. Furthermore, effluent limitations are only applied for EC and is sufficient to control all salinity constituents with reasonable potential.

(d) Plant Performance and Attainability. Analysis of the effluent data shows that the MEC exceeds the WQBELs. Based on the sample results for the effluent, the limitations appear to put the Discharger in immediate non-compliance. New or modified control measures may be necessary in order to comply with the effluent limitations, and the new or modified control measures cannot be designed, installed and put into operation within 30 calendar days. The previous Order includes a compliance schedule with full compliance required by 28 July 2022, or 28 July 2026 in accordance with the TMDL. As discussed in section VII.B.7.c of this Fact Sheet, the compliance schedule has been carried forward in this Order.

xvii. Toxicity. See Section IV.C.5. of the Fact Sheet regarding whole effluent toxicity.

4. WQBEL Calculations

a. This Order includes WQBELs for aluminum, ammonia, carbon tetrachloride, copper, chlorodibromomethane, dichlorobromomethane, and molybdenum (total) that were calculated in accordance with section 1.4 of the SIP. This Order also includes effluent limitations for aluminum, iron and manganese that were established as average annual effluent limitations based on the secondary MCLs. The general methodology for calculating WQBELs based on the different criteria/objectives is described in subsections b through e, below. See Attachment H for the WQBEL calculations.

b. Effluent Concentration Allowance. For each water quality criterion/objective, the ECA is calculated using the following steady-state mass balance equation from Section 1.4 of the SIP:

$$ECA = C + D(C - B) \quad \text{where } C>B, \text{ and}$$
$$ECA = C \quad \text{where } C \leq B$$

where:

ECA = effluent concentration allowance
D = dilution credit
C = the priority pollutant criterion/objective
B = the ambient background concentration.

According to the SIP, the ambient background concentration (B) in the equation above shall be the observed maximum with the exception that an ECA calculated from a priority pollutant criterion/objective that is intended to protect human health from carcinogenic effects shall use the arithmetic mean concentration of the ambient background samples. For ECAs based on MCLs, which implement the Basin Plan's chemical constituents objective and are applied as annual averages, an arithmetic mean is also used for B due to the long-term basis of the criteria.

c. Basin Plan Objectives and MCLs. For WQBELs based on site-specific numeric Basin Plan objectives or MCLs, the effluent limitations are applied directly as the ECA as either an MDEL, AMEL, or average annual effluent limitations, depending on the averaging period of the objective.

d. Aquatic Toxicity Criteria. WQBELs based on acute and chronic aquatic toxicity criteria are calculated in accordance with Section 1.4 of the SIP. The ECAs are converted to equivalent long-term averages (i.e. LTAacute and LTAchronic) using statistical multipliers and the lowest LTA is used to calculate the AMEL and MDEL using additional statistical multipliers.

$$AMEL = mult_{AMEL}\left[\min\left(\overbrace{M_A ECA_{acute}}^{LTA_{acute}}, M_C ECA_{chronic}\right)\right]$$

$$MDEL = mult_{MDEL}\left[\min\left(M_A ECA_{acute}, \underbrace{M_C ECA_{chronic}}_{LTA_{chronic}}\right)\right]$$

e. Human Health Criteria. WQBELs based on human health criteria, are also calculated in accordance with Section 1.4 of the SIP. The ECAs are set equal to the AMEL and a statistical multiplier was used to calculate the MDEL.

$$AMEL_{HH} = ECA_{HH}$$

$$MDEL_{HH} = \left(\frac{mult_{MDEL}}{mult_{AMEL}}\right) AMEL_{HH}$$

where:

$mult_{AMEL}$ = statistical multiplier converting minimum LTA to AMEL
$mult_{MDEL}$ = statistical multiplier converting minimum LTA to MDEL
M_A = statistical multiplier converting acute ECA to LTA_{acute}
M_C = statistical multiplier converting chronic ECA to $LTA_{chronic}$

Summary of Water Quality-Based Effluent Limitations
Discharge Point No. 001

Table F-11~~7~~a. Summary of Water Quality-Based Effluent Limitations (Seasonal Discharge)

Parameter	Units	Effluent Limitations				
		Average Monthly	Average Weekly	Maximum Daily	Instantaneous Minimum	Instantaneous Maximum
Aluminum (Total recoverable)	µg/L	457	200[2]	750	--	--
Ammonia(as N) (mg/l)	mg/L	1.1	--	2.1	--	--
	lbs/day[1]	640	--	1200	--	--
Carbon Tetrachloride	µg/L	4.1	--	13	--	--
Copper, Total recoverable	µg/L	15	--	26	--	--
Dibromochloromethane	µg/L	5.4	--	15	--	--
Dichlorobromomethane	µg/L	9.0	--	13	--	--
Molybdenum, total recoverable	µg/L	--	--	23	--	--
pH	Standard Units	--	--	--	6.5	8.5
Total Residual Chlorine	mg/L	--	0.011[3]	0.019[4]	--	--
Total Coliform Organisms	MPN/100mL	--	23[5]	240[6]	--	--
Manganese, total recoverable	µg/L	50[2]	--	--	--	--
Iron, Total recoverable	µg/L	300[2]	--	--	--	--
Electrical Conductivity	µmhos/cm	700/1000[7]	--	--	--	--
Mercury, Total recoverable	lbs/yr	1.16[12]	--	--	--	--
Acute Toxicity	% survival	--	90[8]	70[9]	--	--
Diazinon and Chlorpyrifos	None	≤1[10]	--	--	--	--
Chronic Toxicity	TUc	Narrative[11]	--	--	--	--

[1] Based on a permitted flow of 70 mgd.
[2] Average annual effluent limit
[3] 4-day average
[4] 1-hour average
[5] 7-day median
[6] Not to exceed more than once in 30-day period
[7] 700 µmhos/cm from 1 April – 30 September, and 1000 µmhos/cm from 1 October – 31 March;compliance with final effluent limitations is not required until 28 July 2022 or 28 July 2026, per TMDL
[8] Median percent survival of three consecutive acute bioassays
[9] Minimum percent survival of any one acute bioassay
[10] Limits for diazinon and chlorpyrifos is an equation (see Section IV.A.1.m of Limitations and Discharge Requirements)
[11] There shall be no chronic toxicity in the effluent discharge.
[12] Maximum annual loading effluent limit.

Table F-11~~7~~b. Summary of Water Quality-Based Effluent Limitations (Year Round Discharge)

Parameter	Units	Effluent Limitations				
		Average Monthly	Average Weekly	Maximum Daily	Instantaneous Minimum	Instantaneous Maximum
Aluminum (Total Recoverable)	µg/L	457	200[2]	750		
Ammonia(as N) (mg/l)	mg/L	1.1		2.1		
	lbs/day[1]	20-180		40-330		
Copper, Total Recoverable	µg/L	9.5		19		
Molybdenum, total recoverable	µg/L			23		
pH	Standard Units				6.5	8.5
Total Coliform Organisms	MPN/100mL		2.2[3]	23[4]		240
Manganese, Total Recoverable	µg/L	50[2]				
Iron, total recoverable	µg/L	300[2]				
Electrical Conductivity	µmhos/cm	700/1000[5]				
Mercury, Total Recoverable	lbs/yr	1.16[10]				
Acute Toxicity	% survival		90[6]	70[7]		
Diazinon and Chlorpyrifos	None	≤1[8]				
Chronic Toxicity	TUc	Narrative[9]				

[1] Based on the permitted flow that ranges from 2.3 mgd to 19.1 mgd to coincide with phased upgrade project.
[2] Average annual effluent limit
[3] 7-day median
[4] Not to exceed more than once in 30-day period
[5] 700 µmhos/cm from 1 April – 30 September, and 1000 µmhos/cm from 1 October – 31 March; compliance with final effluent limitations is not required until 28 July 2022 or 28 July 2026, per TMDL
[6] Median percent survival of three consecutive acute bioassays
[7] Minimum percent survival of any one acute bioassay
[8] Limits for diazinon and chlorpyrifos is an equation (see Section IV.A.2.l of Limitations and Discharge Requirements)
[9] There shall be no chronic toxicity in the effluent discharge.
[10] Maximum annual loading effluent limits.

5. Whole Effluent Toxicity (WET)

For compliance with the Basin Plan's narrative toxicity objective, this Order requires the Discharger to conduct whole effluent toxicity testing for acute and chronic toxicity, as specified in the Monitoring and Reporting Program (Attachment E section V.). This Order also contains effluent limitations for acute toxicity and requires the Discharger to implement best management practices to investigate the causes of, and identify corrective actions to reduce or eliminate effluent toxicity.

a. **Acute Aquatic Toxicity.** The Basin Plan contains a narrative toxicity objective that states, "All waters shall be maintained free of toxic substances in concentrations that produce detrimental physiological responses in human, plant, animal, or aquatic life." (Basin Plan at page III-8.00) The Basin Plan also states that, "…effluent limits based upon acute biotoxicity tests of effluents will

be prescribed where appropriate…". USEPA Region 9 provided guidance for the development of acute toxicity effluent limitations in the absence of numeric water quality objectives for toxicity in its document titled "Guidance for NPDES Permit Issuance", dated February 1994. In section B.2. "Toxicity Requirements" (pgs. 14-15) it states that, "In the absence of specific numeric water quality objectives for acute and chronic toxicity, the narrative criterion 'no toxics in toxic amounts' applies. Achievement of the narrative criterion, as applied herein, means that ambient waters shall not demonstrate for acute toxicity: 1) less than 90% survival, 50% of the time, based on the monthly median, or 2) less than 70% survival, 10% of the time, based on any monthly median. For chronic toxicity, ambient waters shall not demonstrate a test result of greater than 1 TUc." Accordingly, effluent limitations for acute toxicity have been included in this Order for the secondar and tertiary effluent as follows:

Acute Toxicity. Survival of aquatic organisms in 96-hour bioassays of undiluted waste shall be no less than:

Minimum for any one bioassay---------- 70%
Median for any three consecutive bioassays ---------- 90%

b. **Chronic Aquatic Toxicity.** The Basin Plan contains a narrative toxicity objective that states, "*All waters shall be maintained free of toxic substances in concentrations that produce detrimental physiological responses in human, plant, animal, or aquatic life.*" (Basin Plan at page III-8.00) Based on chronic WET testing performed by the Discharger from February 2009 through March 2010, the discharge has reasonable potential to cause or contribute to an in-stream excursion above of the Basin Plan's narrative toxicity objective. As shown in Table F-~~9~~12 below.

Table F-12~~8~~: Whole Effluent Chronic Toxicity Testing Results

	Fathead Minnow *Pimephales promelas*		**Water Flea** *Ceriodaphnia dubia*		**Green Algae** *Selenastrum capricornutum*
Date	Survival (TUc)	Growth (TUc)	Survival (TUc)	Reproduction (TUc)	Growth (TUc)
2/23/2009	1.0	1.0	1.0	1.0	
2/23/2009					2.0
3/16/2009	1.0	1.0	1.0	1.0	
3/19/2009					2.0
3/31/2009					1.0
4/07/2009	1.0	1.0	1.0	1.0	2.0
2/08/2010	1.0	1.0	1.0	1.0	
2/11/2010	1.0	1.0	1.0	1.0	1.0
3/11/2010					1.0

No dilution has been granted for the chronic condition. Therefore, chronic toxicity testing results exceeding 1 chronic toxicity unit (TUc) demonstrates the discharge has a reasonable potential to cause or contribute to an exceedance of the Basin Plan's narrative toxicity objective.

The SIP contains implementation gaps regarding the appropriate form and implementation of chronic toxicity limits. This has resulted in the petitioning of a NPDES permit in the Los Angeles Region[1] that contained numeric chronic toxicity effluent limitations. To address the petition, the State Water Board adopted WQO 2003-012 directing its staff to revise the toxicity control provisions in the SIP. The State Water Board states the following in WQO 2003-012, "*In reviewing this petition and receiving comments from numerous interested persons on the propriety of including numeric effluent limitations for chronic toxicity in NPDES permits for publicly-owned treatment works that discharge to inland waters, we have determined that this issue should be considered in a regulatory setting, in order to allow for full public discussion and deliberation. We intend to modify the SIP to specifically address the issue. We anticipate that review will occur within the next year. We therefore decline to make a determination here regarding the propriety of the final numeric effluent limitations for chronic toxicity contained in these permits."* The process to revise the SIP is currently underway. Proposed changes include clarifying the appropriate form of effluent toxicity limits in NPDES permits and general expansion and standardization of toxicity control implementation related to the NPDES permitting process. Since the toxicity control provisions in the SIP are under revision it is infeasible to develop numeric effluent limitations for chronic toxicity. Therefore, this Order requires that the Discharger meet best management practices for compliance with the Basin Plan's narrative toxicity objective, as allowed under 40 CFR 122.44(k).

To ensure compliance with the Basin Plan's narrative toxicity objective, this Order includes a narrative effluent limit for chronic toxicity and the Discharger is required to conduct chronic WET testing, as specified in the Monitoring and Reporting Program (Attachment E section V.). Furthermore, the Special Provision contained at VI.C.2.a. of this Order requires the Discharger to investigate the causes of, and identify and implement corrective actions to reduce or eliminate effluent toxicity. If the discharge demonstrates toxicity exceeding the numeric toxicity monitoring trigger, the Discharger is required to initiate a Toxicity Reduction Evaluation (TRE) in accordance with an approved TRE workplan. The numeric toxicity monitoring trigger is not an effluent limitation; it is the toxicity threshold at which the Discharger is required to perform accelerated chronic toxicity monitoring, as well as, the threshold to initiate a TRE if effluent toxicity has been demonstrated.

[1] In the Matter of the Review of Own Motion of Waste Discharge Requirements Order Nos. R4-2002-0121 [NPDES No. CA0054011] and R4-2002-0123 [NPDES NO. CA0055119] and Time Schedule Order Nos. R4-2002-0122 and R4-2002-0124 for Los Coyotes and Long Beach Wastewater Reclamation Plants Issued by the California Regional Water Quality Control Board, Los Angeles Region SWRCB/OCC FILES A-1496 AND 1496(a)

D. Final Effluent Limitations

1. Mass-based Effluent Limitations

40 CFR 122.45(f)(1) requires effluent limitations be expressed in terms of mass, with some exceptions, and 40 CFR 122.45(f)(2) allows pollutants that are limited in terms of mass to additionally be limited in terms of other units of measurement. This Order includes effluent limitations expressed in terms of mass and concentration. In addition, pursuant to the exceptions to mass limitations provided in 40 CFR 122.45(f)(1), some effluent limitations are not expressed in terms of mass, such as pH and temperature, and when the applicable standards are expressed in terms of concentration (e.g., CTR criteria and MCLs) and mass limitations are not necessary to protect the beneficial uses of the receiving water.

Mass-based effluent limitations were calculated based upon the design flow of 70 mgd for the secondary effluent and 2.3 to 19.1 mgd for tertiary effluent permitted in sections IV.A.1.(f) and IV.A.1.(e)of this Order.

2. Averaging Periods for Effluent Limitations

40 CFR 122.45 (d) requires average weekly and average monthly discharge limitations for publicly owned treatment works (POTWs) unless impracticable. However, for toxic pollutants and pollutant parameters in water quality permitting, USEPA recommends the use of a maximum daily effluent limitation in lieu of average weekly effluent limitations for two reasons. "*First, the basis for the 7-day average for POTWs derives from the secondary treatment requirements. This basis is not related to the need for assuring achievement of water quality standards. Second, a 7-day average, which could comprise up to seven or more daily samples, could average out peak toxic concentrations and therefore the discharge's potential for causing acute toxic effects would be missed.*" (TSD, pg. 96) This Order uses maximum daily effluent limitations in lieu of average weekly effluent limitations for aluminum, ammonia, carbon tetrachloride, copper, dibromochloromethane, bromodichloromethane as recommended by the TSD for the achievement of water quality standards and for the protection of the beneficial uses of the receiving stream.

For TSS, BOD_5, pH, total residual chlorine, and total coliform organisms, weekly average effluent limitations have been replaced or supplemented with effluent limitations utilizing shorter averaging periods. The rationale for using shorter averaging periods for these constituents is discussed in section IV.C.3 of this Fact Sheet.

For effluent limitations based on Primary and Secondary MCLs, except nitrate and nitrite, this Order includes annual average effluent limitations. The Primary and Secondary MCLs are drinking water standards contained in Title 22 of the California Code of Regulations. Title 22 requires compliance with these standards on an annual average basis (except for nitrate and nitrite), when sampling at least quarterly. Since it is necessary to determine compliance on an annual average

basis, it is impracticable to calculate average weekly and average monthly effluent limitations.

For effluent limitations based on Secondary MCLs, this Order includes annual average effluent limitations. The Secondary MCLs are drinking water standards contained in Title 22 of the California Code of Regulations. Title 22 requires compliance with these standards on an annual average basis, when sampling at least quarterly. Since it is necessary to determine compliance on an annual average basis, it is impracticable to calculate average weekly and average monthly effluent limitations.

3. Satisfaction of Anti-Backsliding Requirements

The Clean Water Act specifies that a revised permit may not include effluent limitations that are less stringent than the previous permit unless a less stringent limitation is justified based on exceptions to the anti-backsliding provisions contained in Clean Water Act sections 402(o) or 303(d)(4), or, where applicable, 40 CFR 122.44(l).

Based on new information gathered over the term of Order R5-2008-0059-01, the effluent limitations in this Order are at least as stringent as the effluent limitations in the previous Order, with the exception of effluent limitations for ~~aluminum, ammonia, carbon tetrachloride, and dibromochloromethane~~nitrate (as N) and selenium. The effluent limitations for these pollutants are less stringent than those in Order No.R5-2008-0059-01. ~~Additionally, t~~This Order does not carry forward the effluent limitations for nitrate (as N), and selenium, because the discharge does not demonstrate reasonable potential to cause or contribute to an in-stream exceedance of the applicable water quality criteria/objective for these constituents as discussed in previous section IV.C.3.c. This relaxation of effluent limitations is consistent with the anti-backsliding requirements of the CWA and federal regulations, as discussed in detail below.

For Aluminum, Ammonia, Carbon tetrachloride, and Dibromochloromethane, some effluent limits have changed from the previous permit. However, the effluent limits are not less stringent. In these cases, the waste load allocations (WLA)[1] in this Order and the previous Order are identical. The WLA provides a definition of effluent quality that is necessary to meet the water quality standards of receiving water and is used to derive water quality-based effluent limits (WQBELs) that are used to enforce the WLA.

The TSD warns that, "*Direct use of a WLA as a permit limit creates a significant risk that the WLA will be enforced incorrectly, since effluent variability and the probability basis for the limit are not considered specifically.*" (TSD, p. 96) The SIP and TSD include identical procedures for calculating WQBELs that use the statistical

[1] The WLA is equivalent to the Effluent Concentration Allowance used in the SIP (Section 1.4) for water quality-based effluent limit calculations.

variability of the effluent to convert the WLA to average monthly and maximum daily effluent limits.

The new effluent data used to calculate WQBELs for this Order has different statistical variability (i.e., coefficient of variation is different) than used in the previous Order. Changes in the coefficient of variation can result in small changes to the effluent limits. However, the slight changes in effluent limits do not allow for an increase in the pollutants discharged. The TSD states, "*Since effluents are variable and permit limits are developed based on a low probability of exceedence, the permit limits should consider effluent variability and ensure that the requisite loading from the WLA is not exceeded under normal conditions. In effect then, the limits must "force" treatment plant performance, which, after considering acceptable effluent variability, will only have a low statistical probability of exceeding the WLA and will achieve the desired loadings.*" (TSD, p. 97) Therefore, although there are slight differences in the effluent limits, the WLA are identical, so the level of treatment needed to maintain compliance with the effluent limits remains the same. Consequently, the effluent limits are not less stringent than the previous Order, and there is no backsliding.

WQBELs for Aluminum, Ammonia, Carbon tetrachloride, and Dibromochloromethane were calculated based on the last three years of seasonal secondary effluent data (February 2009 to March 2011). This dataset is representative of the Facility improvements and required monitoring frequency to meet the effluent limits in the previous permit. Therefore, Central Valley Water Board staff considers the last three years of seasonal secondary effluent data to be the most representative and reliable dataset to use to determine current facility performance and development of WQBELs.

a. **Aluminum and Ammonia.** The average monthly effluent limitations (AMELs) for aluminum and ammonia for the secondary and tertiary discharges in this Order are less not stringent than in previous Order R5-2008-0059-01. Although the AMELs were calculated as a higher value~~are less stringent~~, the ~~water quality-based effluent limitations (~~WQBELs~~)~~ in both Orders are based on the same ~~criterion~~ WLA (i.e., WLA's are based on the the acute aquatic life criterion recommended in USEPA's 1988 National Ambient Water Quality Criteria for Aluminum and USEPA's National Ambient Water Quality Criteria for ammonia). The reason for the change in AMELs is due to a change in the variability of the effluent data for aluminum and ammonia. The coefficient of variation for the recent effluent data is less than for the data used in the previous Order. Using the procedures for calculating WQBELs in Section 1.4 of the SIP, when an acute aquatic life criterion is used to calculate WQBELs, a lower coefficient of variation results in a less stringent AMEL, but is equally protective of the beneficial uses. The level of treatment needed to maintain compliance with the effluent limits remains the same. Consequently, the effluent limits are not less stringent than the previous permit, and there is no backsliding.~~This relaxation of effluent limitations is based on new information and is consistent with the anti-backsliding requirements of the CWA and federal regulations. The change in effluent~~

~~limitations is also consistent with the antidegradation provisions of 40 CFR 131.12 and State Water Resources Control Board Resolution 68-16.~~

b. **Carbon tetrachloride.** The maximum daily effluent limits (MDEL) for carbon tetrachloride for the secondary discharge in this Order was calculated as a higher value ~~is less stringent~~ than in previous Order R5-2008-0059-01. However, the AMEL was calculated as a lower value~~is more stringent~~. The WQBELs in both Orders are based on the same ~~criterion~~ WLA (i.e., the WLA is based on the CTR human health criterion for carbon tetrachloride). The reason for the change in the AMEL and MDEL is due to a change in the variability of the effluent data for carbon tetrachloride. The coefficient of variation for the recent effluent data is greater than for the data used in the previous Order. Using the procedures for calculating WQBELs in Section 1.4 of the SIP, for human health criteria, a higher coefficient of variation results in a ~~less stringent~~higher MDEL, but a ~~more stringent~~lower AMEL. The WQBELs, however, are equally protective of the beneficial uses. The level of treatment needed to maintain compliance with the effluent limits remains the same. Consequently, the effluent limits are not less stringent than the previous permit, and there is no backsliding.~~This relaxation of effluent limitations is based on new information and is consistent with the anti-backsliding requirements of the CWA and federal regulations. The change in effluent limitations is also consistent with the antidegradation provisions of 40 CFR 131.12 and State Water Resources Control Board Resolution 68-16.~~

c. **Dibromochloromethane.** The AMEL for dibromochloromethane for the secondary discharge in this Order was calculated as a higher value ~~is less stringent~~ than in previous Order R5-2008-0059-01. However, the MDEL was calculated as a lower value~~is more stringent~~. The WQBELs in both Orders are based on the same ~~criterion~~ WLA (i.e., the WLA is based on the CTR human health criterion for dibromochloromethane). The reason for the change in the AMEL and MDEL is due to a change in the variability of the effluent data for dibromochloromethane. The coefficient of variation for the recent effluent data is lower than for the data used in the previous Order. Using the procedures for calculating WQBELs in Section 1.4 of the SIP, for human health criteria, a lower coefficient of variation results in a less stringent AMEL, but a more stringent MDEL. The WQBELs, however, are equally protective of the beneficial uses. The level of treatment needed to maintain compliance with the effluent limits remains the same. Consequently, the effluent limits are not less stringent than the previous permit, and there is no backsliding.~~This relaxation of effluent limitations is based on new information and is consistent with the anti-backsliding requirements of the CWA and federal regulations. The change in effluent limitations is also consistent with the antidegradation provisions of 40 CFR 131.12 and State Water Resources Control Board Resolution 68-16.~~

d. **Nitrate (as N).** Previous Order R5-2008-0059-01included an effluent limit for Nitrate of 42 mg/L (as N) for the secondary discharge, which allowed for dilution. Based on new secondary effluent data for nitrate (as N), the discharge does not demonstrate reasonable potential, therefore, the effluent limits for the secondary

discharge have been removed in this Order. This is consistent with the federal antibacksliding regulations, because the new data represents new information that was not available at the time the previous Order was adopted. The removal of nitrate effluent limits for the secondary discharge is consistent with the state and federal Antidegradation requirements.

e. **Selenium.** Previous Order R5-2008-0059-01included WQBELs for selenium for the secondary and tertiary discharges. Based on new secondary and tertiary effluent data for selenium, the discharge does not demonstrate reasonable potential, therefore, the effluent limits have been removed in this Order. This is consistent with the federal antibacksliding regulations, because the new data represents new information that was not available at the time the previous Order was adopted. The removal of selenium effluent limits is consistent with the state and federal Antidegradation requirements.

4. Satisfaction of Antidegradation Policy

This Order allows an increase in year-round tertiary discharge flow of 14.3 mgd (an increase in discharge from 4.8 mgd to 19.1 mgd). Upon completion of the City's proposed upgrades to the tertiary facilities, the Discharger will cease its seasonal secondary discharge to the SJR. Larry Walker & Associates prepared a report titled *City of Modesto Antidegradation Analysis for Proposed Wastewater Quality Control Facility Discharge Modification,* August 2010 (Antideg Report) that provides a complete antidegradation analysis, following the guidance provided by State Water Board APU 90-004,for the full build out proposed tertiary discharge flow of 19.1 mgd. Pursuant to the guidelines, the Report evaluated whether changes in water quality resulting from the proposed capacity increase (19.1 mgd year-round tertiary treated discharge) are consistent with the maximum benefit to the people of the state, will not unreasonably affect beneficial uses, will not cause water quality to be less than water quality objectives, and that the discharge provides protection for existing in-stream uses and water quality necessary to protect those uses.

This Order allows mixing zones in accordance with the Basin Plan, the SIP, EPA's *Water Quality Standards Handbook*, 2d Edition (updated July 2007) and EPA's *Technical Support Document for Water Quality-based Toxics Control*. As discussed in Finding IV.C.2.c of this Fact Sheet (Assimilative Capacity/Mixing Zone), the mixing zones comply with all applicable requirements. In addition, this Order includes more stringent performance-based requirements for molybdenum, than would be allowed under the mixing zone analysis alone, implementing Best Practical Treatment or Control (BPTC). Therefore, with BPTC implemented, the Central Valley Water Board finds that the degradation due to the increase of pollutant concentration allowed by the mixing zone does not unreasonably affect beneficial uses in the receiving water downstream of the mixing zone, and is in accordance with state and federal antidegradation policies.

Based on the Antideg Report, the Central Valley Water Board finds that the permitted surface water discharge is consistent with the antidegradation provisions of CFR Part 131.12 and State Water Resources Control Board Resolution 68-16.

This Order allows for an increase in the volume and mass of pollutants discharged to the SJR, by allowing an increase in year-round discharge flow to 19.1 mgd. The increase in the discharge allows wastewater utility service necessary to accommodate housing and economic expansion in the area, and is considered to be a benefit to the people of the State. The discharge is a Title 22, or equivalent, tertiary-level treated wastewater, which is a high level of treatment of sewage waste that is considered best practicable treatment or control (BPTC) for most constituents in the wastewater and will result in attaining water quality standards applicable to the discharge. A detailed discussion of the Central Valley Water Board's Antidegradation analysis is provided below.

a. **Water quality impacts of an increase in permitted capacity.** This Order does not allow the discharge to adversely impact beneficial uses of the receiving water or downstream receiving waters. All beneficial uses will be maintained and protected. This Order provides for an increase in the volume and mass of pollutants discharged directly to the receiving water. Code of Federal Regulations 40 CFR 131.12 defines the following tier designations to describe water quality in the receiving water body.

   Tier 1 Designation: *Existing instream water uses and the level of water quality necessary to protect the existing uses shall be maintained and protected. (40 CFR 131.12)*

   Tier 2 Designation*: Where the quality of waters exceed levels necessary to support propagation of fish, shellfish, and wildlife and recreation in and on the water, that quality shall be maintained and protected unless the State finds, after full satisfaction of the intergovernmental coordination and public participation provisions of the State's continuing planning process, that allowing lower water quality is necessary to accommodate important economic or social development in the area in which the waters are located. In allowing such degradation or lower water quality, the State shall assure water quality adequate to protect existing uses fully. Further, the State shall assure that there shall be achieved the highest statutory and regulatory requirements for all new and existing point sources and all cost-effective and reasonable best management practices for nonpoint source control. (40 CFR 131.12)*

   The tier designation is assigned on a pollutant-by-pollutant basis. The following is the potential effect on water quality parameters regulated in this Order, and was assessed in the Antideg Report.

   - Based on the findings of the Antideg Report, considering the elimination of the seasonal secondary discharge, the increase in year-round tertiary discharge would have minimal impact on the near-field and far-field water quality of the San Joaquin River with respect to chemical constituents and dissolved oxygen. The analysis demonstrates the proposed project would have an overall favorable impact on water quality in the receiving waters downstream of the Facility, and that the water quality necessary to protect beneficial uses would be maintained. Some constituents in the receiving

water exceed water quality objectives, but it is not caused by the discharge. "*The near-field water quality impact assessment also shows exceedance of the aluminum, iron, manganese, and EC water quality objectives in the receiving water. However, these exceedances are the result of the ambient levels of these four parameters already exceeding water quality standards upstream of the WQCF discharge. The WQCF discharge acts to slightly decrease downstream concentrations of these four parameters compared to their upstream concentrations. All other near- and far-field constituents considered in this report are expected to exhibit, at worst, only very minor increases in concentration in the receiving water at well-mixed conditions downstream of the discharge. They are not projected to exceed relevant water quality objectives, and on average are estimated to be present at concentrations well below objectives.*" (pg. ES-2, Antideg Report)

- The increased discharge would negligibly increase loading of bioaccumulative constituents. No beneficial uses of San Joaquin River are anticipated to be adversely affected by the planned action.

b. Scientific Rationale for Determining Potential Lowering of Water Quality. The rationale used in the Antidegradation Analysis is based on Code of Federal Regulation, Section 131.12 (40 CFR 131.12), State Water Board Resolution No. 68-16, an Administrative Procedures Update (APU 90-004) issued by the State Water Board to the Regional Water Quality Control Boards, the Basin Plan, the CTR, and the 303(d) Listings.

The scientific rationale used in the Antideg Report evaluated the near-field and far-field water quality impacts of increasing the discharge. The near-field effects on San Joaquin River water quality of the current permitted Facility design capacity and the proposed Facility design capacity were compared using a mass balance equation for each discharge season, winter and summer (i.e., October 1 to May 31 and June 1 to September 30, respectively). The discharge is expected to be substantially mixed with the receiving water at a point approximately 1-mile downstream of the discharge, which represents the near-field domain for water quality modeling. Near-field water quality impacts are estimated considering the increase in tertiary discharge and the elimination of the seasonal secondary discharge during the winter season and increasing the teratiary discharge during the summer season. Changes in water quality were evaluated using 1) projected median tertiary and secondary effluent concentrations, and 2) median ambient river concentrations calculated from critical, dry, and below normal water years.

The far-field effects on the San Joaquin River were assessed ~~on~~ using a mass balance model in conjuction with a hydrologic model of water movement through the Sacramento-San Joaquin Delta. Six locations within the Delta and one location at the boundary (i.e., SJR at Vernalis) were used as far-field locations for the evaluation.

The Antideg Report analyzed pollutants that were based on one or more of the following conditions: 1) the Facility received an effluent limitation for a particular

constituent, 2) the constituent was identified as a pollutant/stressor on the 303(d) list for selected Delta waterways, or 3) an adopted TMDL exists downstream of the discharge. The Antideg Report evaluated each selected pollutant detected in the effluent and receiving water to determine if the proposed tertiary discharge increase of 14.3 mgd (and removal of seasonal secondary discharge) authorized by this Order potentially allows significant increase of the amount of pollutants present in the downstream receiving water influenced by the proposed discharge. Pollutants that significantly increased concentration or mass downstream would have required an alternatives analysis to determine whether implementation of alternatives to the proposed action would be in the best socioeconomic interest of the people of the region, and be to the maximum benefit of the people of the State. Details on the scientific rationale are discussed in detail in the Antideg Report.

The Central Valley Water Board concurs with this scientific approach.

c. **Alternative Control Measures.** APU 90-004 requires the consideration of "feasible alternative control measures" as part of the procedures for a complete antidegradation analysis. The Discharger considered several alternatives that would reduce or eliminate the lowering of water quality resulting from the proposed 14.3 mgd tertiary discharge increase. The Antideg Report assessed maintaining existing water quality in the San Joaquin River with an increase in discharge through evaluating 1) additional wastewater treatment by microfiltration and reverse osmosis (MF/RO), or 2) no increase in discharge capacity. These plant expansion alternatives are summarized below:

- The implementation of MF/RO would offset estimated reductions in San Joaquin River water quality; however, the monthly residential user rates would increase. The economic impacts model also estimates job losses due to this project, and the Antideg Report presents issues regarding the brine and crystallized residuals disposal.

- No Project Alternative, which is not to increase the discharge capacity.

The project alternatives evaluated would not substantially reduce or eliminate significant water quality impacts of the proposed action, because the proposed action would not significantly degrade water quality. The MF/RO alternative may result in water quality effects elsewhere, or ~~other~~ cause other environmental impacts, that are worse than those identified for the proposed action

d. **Socioeconomic Evaluation.** The objective of the socioeconomic analysis was to determine if the lowering of San Joaquin River water quality is in the maximum benefit of the people of the state. The socioeconomic evaluation within the Antideg Report provides an in-depth analysis of: 1) cost and benefits and 2) socio-economic impacts of alternatives for maintaining existing water quality, and 3) balance of environmental benefits and socio-economic considerations. The Antideg Report also provided results from modeling of the economic impacts on the community.

Given the current infrastructure, future development in the City of Modesto and surrounding communities, would rely on the Discharger and its Facility for wastewater collection, treatment, and recycled water services. The plant expansion of 14.3 mgd and increase surface water discharge would accommodate planned and approved growth. Should the incremental changes in San Joaquin River water quality characterized herein be disallowed, such action would: (1) force future developments in the Discharger's service area to find alternative methods for disposing of wastewater; (2) require adding a reverse-osmosis treatment processes to a significant portion of flow, and possibly other plant upgrades, to eliminate the small water quality changes; or (3) prohibit planned and approved development within and adjacent to the Discharger's service area. On balance, allowing the minor degradation of water quality is in the best interest of the people of the area and the state, compared to these other options; and is necessary to accommodate important economic or social development in the area.

e. **Justification for Allowing Degradation.** Potential degradation identified in the Antideg Report and due to this Order is justified by the following considerations:

- The increase in permitted discharge capacity is necessary to accommodate important economic and social development in the City of Modesto and surrounding communities, and is consistent with the Discharger's General Plan. Failure to approve the increase, or alternatively requiring the Discharger to implement control measures that would maintain existing water quality and mass emissions in the San Joaquin River, would have significant adverse economic and social impacts on the City of Modesto and surrounding communities and their citizens and businesses.

- The Facility will discharge Title 22 tertiary treated effluent with nitrification/denitrification that will result in minimal water quality degradation, and meet or exceed the highest statutory and regulatory requirements which meets or exceeds best practical treatment or control (BPTC).

- The Order is fully protective of the beneficial uses of the San Joaquin River. The anticipated water quality changes in the San Joaquin River will not reduce or impair its designated beneficial uses and is consistent with State and federal antidegradation policies.

- The increased discharge, while causing slight increases in downstream water quality concentrations for some constituents, will produce slight decreases in downstream concentrations for others,

- The benefits of maintaining existing water quality and mass emissions for the constituents analyzed are not commensurate with the costs of additional treatment. Therefore, no feasible alternatives currently exist to reduce the impacts, and

- The Discharger has fully satisfied the requirements of the intergovernmental coordination and public participation provisions of the State's continuing planning process concurrent with the public participation period of this Order.

5. Stringency of Requirements for Individual Pollutants

This Order contains both technology-based effluent limitations and WQBELs for individual pollutants. The technology-based effluent limitations consist of restrictions on BOD5, TSS, and flow for the secondary and tertiary discharge flow. The WQBELs consist of restrictions on aluminum (total recoverable), ammonia, carbon tetrachloride, copper (total recoverable), dibromochloromethane, dichlorobromomethane, molybdenum (total recoverable), pH, total residual chlorine, total coliform organisms, manganese (total recoverable), iron (total recoverable), electrical conductivity, mercury (total recoverable), acute toxicity, chronic toxicity, diazinon, and chlorpyrifos. This Order's technology-based pollutant restrictions implement the minimum, applicable federal technology-based requirements

WQBELs have been scientifically derived to implement water quality objectives that protect beneficial uses. Both the beneficial uses and the water quality objectives have been approved pursuant to federal law and are the applicable federal water quality standards. To the extent that toxic pollutant WQBELs were derived from the CTR, the CTR is the applicable standard pursuant to 40 CFR 131.38. The scientific procedures for calculating the individual WQBELs for priority pollutants are based on the CTR-SIP, which was approved by USEPA on 18 May 2000. All beneficial uses and water quality objectives contained in the Basin Plan were approved under state law and submitted to and approved by USEPA prior to 30 May 2000. Any water quality objectives and beneficial uses submitted to USEPA prior to 30 May 2000, but not approved by USEPA before that date, are nonetheless "applicable water quality standards for purposes of the CWA" pursuant to 40 CFR 131.21(c)(1). Collectively, this Order's restrictions on individual pollutants are no more stringent than required to implement the requirements of the CWA.

On September 2010, the Discharger submitted economic information indicating that the cost of complying with this Order would be $134,300,000 (Initial Study Mitigated Negative Declaration- EA/UP&P No.2010-13). The Central Valley Water Board has considered the specific costs identified in the Discharger's submittal. .

This Order contains pollutant restrictions that are more stringent than applicable federal requirements and standards. Specifically, this Order includes tertiary effluent

limitations for BOD5, TSS, and total coliform organisms that are more stringent than applicable federal standards, but that are nonetheless necessary to meet numeric objectives or protect beneficial uses. The rationale for including these limitations is explained in section IV.B.2.b.of this Fact Sheet. In addition, the Central Valley Water Board has considered the factors in CWC section 13241 in sections IV.B.2.b and IV.C.3.d of this Fact Sheet.

Summary of Final Effluent Limitations
Discharge Point No. 001

Table F-13~~9~~a. Summary of Final Effluent Limitations (Seasonal Secondary)

Parameter	Units	Effluent Limitations				
		Average Monthly	Average Weekly	Maximum Daily	Instantaneous Minimum	Instantaneous Maximum
Flow	MGD	--	--	70	--	--
Biochemical Oxygen Demand 5-day @ 20°C	mg/L	30	45	90	--	--
	lbs/day[1]	17,500	26,300	52,500	--	--
	% Removal	85	--	--	--	--
Total Suspended Solids	mg/L	45	60	105	--	--
	lbs/day[1]	26,300	35,000	61,300	--	--
	% Removal	85	--	--	--	--
Aluminum (Total Recoverable)	µg/L	457	200[2]	750	--	--
Ammonia(as N) (mg/l)	mg/L	1.1	--	2.1	--	--
	lbs/day[1]	640	--	1200	--	--
Carbon Tetrachloride	µg/L	4.1	--	13	--	--
Copper, Total Recoverable	µg/L	15	--	26	--	--
Dibromochloromethane	µg/L	5.4	--	15	--	--
Dichlorobromomethane	µg/L	9.0	--	13	--	--
Molybdenum, Total Recoverable	µg/L	--	--	23	--	--
pH	Standard Units	--	--	--	6.5	8.5
Total Residual Chlorine	mg/L	--	0.011[3]	0.019[4]	--	--
Total Coliform Organisms	MPN/100mL	--	23[5]	240[6]	--	--
Manganese, total recoverable	µg/L	50[2]	--	--	--	--
Iron, Total Recoverable	µg/L	300[2]	--	--	--	--
Electrical Conductivity	µmhos/cm	700/1000[7]	--	--	--	--
Mercury, Total Recoverable	lbs/yr	1.16[11]	--	--	--	--
Acute Toxicity	% survival	--	90[8]	70[9]	--	--
Diazinon and Chlorpyrifos	None	≤1[10]	--	--	--	--
Chronic Toxicity	TUc	Narrative[11]	--	--	--	--

[1] Based on a permitted flow of 70 mgd.
[2] Average annual effluent limit
[3] 4-day average
[4] 1-hour average
[5] 7-day median
[6] Not to exceed more than once in 30-day period
[7] 700 µmhos/cm from 1 April – 30 September, and 1000 µmhos/cm from 1 October – 31 March; compliance with final effluent limitations is not required until 28 July 2022 or 28 July 2026, per compliance schedule.
[8] Median percent survival of three consecutive acute bioassays
[9] Minimum percent survival of any one acute bioassay
[10] Limits for diazinon and chlorpyrifos is an equation (see Section IV.A.1.m of Limitations and Discharge Requirements)
[11] There shall be no chronic toxicity in the effluent discharge.
[12] Total annual mass effluent limit.

Table F-~~9~~13b. Summary of Final Effluent Limitations (Year-Round Tertiary)

Parameter	Units	Effluent Limitations				
		Average Monthly	Average Weekly	Maximum Daily	Instantaneous Minimum	Instantaneous Maximum
Flow	MGD[1]	--	--	2.3-19.1	--	--
Biochemical Oxygen Demand 5-day @ 20°C	mg/L	10	15	20	--	--
	lbs/day[1]	200-1600	300-2400	400-3200	--	--
	% Removal	85	--	--	--	--
Total Suspended Solids	mg/L	10	15	20	--	--
	lbs/day[1]	200-1600	300-2400	400-3200	--	--
	% Removal	85	--	--	--	--
Aluminum (Total recoverable)	µg/L	457	200[2]	750	--	--
Ammonia(as N) (mg/l)	mg/L	1.1	--	2.1	--	--
	lbs/day[1]	20-180	--	40-330	--	--
Copper, Total Recoverable	µg/L	9.5	--	19	--	--
Molybdenum, Total Recoverable	µg/L	--	--	23	--	--
pH	Standard Units	--	--	--	6.5	8.5
Total Coliform Organisms	MPN/100mL	--	2.2[3]	23[4]	--	240
Manganese, Total Recoverable	µg/L	50[2]	--	--	--	--
Iron, Total Recoverable	µg/L	300[2]	--	--	--	--
Electrical Conductivity	µmhos/cm	700/1000[5]	--	--	--	--
Mercury, Total Recoverable	lbs/yr	1.16[10]	--	--	--	--
Acute Toxicity	% survival	--	90[6]	70[7]	--	--
Diazinon and Chlorpyrifos	None	≤1[8]	--	--	--	--
Chronic Toxicity	TUc	Narrative[9]	--	--	--	--

[1] Based on the permitted flow that ranges from 2.3 mgd to 19.1 mgd to coincide with phased upgrade project.
[2] Average annual effluent limit
[3] 7-day median
[4] Not to exceed more than once in 30-day period
[5] 700 µmhos/cm from 1 April – 30 September, and 1000 µmhos/cm from 1 October – 31 March; compliance with final effluent limitations is not required until 28 July 2022 or 28 July 2026, per compliance schedule.
[6] Median percent survival of three consecutive acute bioassays
[7] Minimum percent survival of any one acute bioassay
[8] Limits for diazinon and chlorpyrifos is an equation (see Section IV.A.2.l of Limitations and Discharge Requirements)
[9] There shall be no chronic toxicity in the effluent discharge.
[10] Total annual mass effluent limit.

E. Interim Effluent Limitations

1. Compliance Schedule for Electrical Conductivity (EC) and Ammonia.

A compliance schedule is necessary because the Discharger must implement actions, including a three phase upgrade to construct tertiary facilities that would increase the year round tertiary discharge to 19.1 MGD. Phase 1A construction of tertiary treatment facilities (2.3 MGD), was completed on 1 July 2010. The Phase 2 upgrade is expected to be initiated in 2012, with completion expected by February 2018. The seasonal 70 MGD secondary discharge will cease with completion of the Phase 2 upgrades.

The Discharger has made diligent efforts to quantify pollutant levels in the discharge and the sources of the pollutant in the waste stream, and the results of those efforts.

Interim performance-based limitations have been established in this Order. The interim limitations were determined as described in section IV.E.2., below, and are in effect until the final limitations take effect. (As part of the compliance schedule, this Order requires the Discharger prepare and implement a pollution prevention plan that is in compliance with CWC section 13263.3(d)(3). The interim numeric effluent limitations and source control measures will result in the highest discharge quality that can reasonably be achieved until final compliance is attained.

2. Interim Limits for Salinity and Ammonia.

The Compliance Schedule Policy requires the Central Valley Water Board to establish interim requirements and dates for their achievement in the NPDES permit. Interim numeric effluent limitations are required for compliance schedules longer than one year. Interim effluent limitations must be based on current treatment plant performance or existing final permit limitations, whichever is more stringent. When feasible, interim limitations must correspond with final permit effluent limitations with respect to averaging bases (e.g., AMEL, MDEL, average monthly, etc.) for effluent limitations for which compliance protection is intended.

In determining interim effluent limits based on Faility performance, where there are 10 sampling data points or more, sampling and laboratory variability is accounted for by establishing interim limits that are based on normally distributed data where 99.9% of the data points will lie within 3.3 standard deviations of the mean (Basic Statistical Methods for Engineers and Scientists, Kennedy and Neville, Harper and Row). Therefore, the interim performance-based limitations in this Order were calculated as the mean plus 3.3 standard deviations of the available data.

The Central Valley Water Board finds that the Discharger can undertake source control and treatment plant measures to maintain compliance with the interim limitations included in this Order. Interim limitations are established when compliance with final effluent limitations cannot be achieved by the existing discharge. Discharge of constituents in concentrations in excess of the final

effluent limitations, but in compliance with the interim effluent limitations, can significantly degrade water quality and adversely affect the beneficial uses of the receiving stream on a long-term basis. The interim limitations, however, establish an enforceable ceiling concentration until compliance with the effluent limitation can be achieved.

a. Interim Limits for Salinity

The interim effluent limitations for EC have been carried forward from previous Order R5-2008-0059-01. The monthly average results after permit adoption (April 2008) were below the previous Order interim performance-based effluent limit of 1341 µmhos/cm (maximum monthly average was 1200 µmhos/cm). The interim limitation of EC of 1,341 µmhos/cm was based on an average monthly effluent limitation for EC derived using effluent data collected from December 2004 through May 2007.

b. Interim Limits for Ammonia

Performance-based effluent limits for ammonia calculated as the 99.9th percentile results in a maximum daily effluent limitation that is, at times less stringent than the final floating MDEL required in previous Order R5-2008-0059-01. The floating MDELs are WQBELs based on the acute criterion from USEPA's National Ambient Water Quality Criteria for Ammonia, which vary based on pH. The Discharger can comply with the more stringent WQBELs, therefore, this Order carries forward the MDEL from the previous Order, rather than establish a fixed MDEL based on the 99.9th percentile. The pH-depending interim limitations for ammonia are described in Table 7b.

F. Land Discharge Specifications – Not Applicable

Land discharge specifications are included in separate waste discharge requirements (Order 99-112). The Discharger operates a large ranch facility in conjunction with the treatment facility. The 2,530 acre ranch facility receives both secondary treated effluent and direct application of pretreated cannery discharge through the cannery segregation line during certain summer canning periods.

G. Reclamation Specifications – Not Applicable

Reclamat~~e~~ion specifications are included in separate waste discharge requirements (Order 99-112). The Discharger uses tertiary treated effluent for onsite clean-up and irrigation purposes where all runoff is kept on site and routed back to the facility headworks or to the storage ponds. Although not yet established or permitted, the Discharger plans future reclamation activities through a master reclamation permit.

V. RATIONALE FOR RECEIVING WATER LIMITATIONS

Basin Plan water quality objectives to protect the beneficial uses of surface water and groundwater include numeric objectives and narrative objectives, including objectives for chemical constituents, toxicity, and tastes and odors. The toxicity objective requires that surface water and groundwater be maintained free of toxic substances in concentrations that produce detrimental physiological responses in humans, plants, animals, or aquatic life. The chemical constituent objective requires that surface water and groundwater shall not contain chemical constituents in concentrations that adversely affect any beneficial use or that exceed the maximum contaminant levels (MCLs) in Title 22, CCR. The tastes and odors objective states that surface water and groundwater shall not contain taste- or odor-producing substances in concentrations that cause nuisance or adversely affect beneficial uses. The Basin Plan requires the application of the most stringent objective necessary to ensure that surface water and groundwater do not contain chemical constituents, toxic substances, radionuclides, or taste and odor producing substances in concentrations that adversely affect domestic drinking water supply, agricultural supply, or any other beneficial use.

A. Surface Water

1. CWA section 303(a-c), requires states to adopt water quality standards, including criteria where they are necessary to protect beneficial uses. The Regional Water Board adopted water quality criteria as water quality objectives in the Basin Plan. The Basin Plan states that "[t]*he numerical and narrative water quality objectives define the least stringent standards that the Regional Water Board will apply to regional waters in order to protect the beneficial uses.*" The Basin Plan includes numeric and narrative water quality objectives for various beneficial uses and water bodies. This Order contains receiving surface water limitations based on the Basin Plan numerical and narrative water quality objectives for bacteria, biostimulatory substances, color, chemical constituents, dissolved oxygen, floating material, oil and grease, pH, pesticides, radioactivity, suspended sediment, settleable substances, suspended material, tastes and odors, temperature, toxicity, and turbidity.

B. Groundwater.—Not Applicable

VI. RATIONALE FOR MONITORING AND REPORTING REQUIREMENTS

40 CFR 122.48 requires that all NPDES permits specify requirements for recording and reporting monitoring results. Water Code sections 13267 and 13383 authorizes the Regional Water Board to require technical and monitoring reports. The Monitoring and Reporting Program (Attachment E) of this Order, establishes monitoring and reporting requirements to implement federal and state requirements. The following provides the rationale for the monitoring and reporting requirements contained in the Monitoring and Reporting Program for the Facility.

A. Influent Monitoring

1. Influent monitoring is required to collect data on the characteristics of the wastewater and to assess compliance with effluent limitations (e.g., BOD_5 and TSS reduction requirements). The monitoring frequencies for flow (continuous), BOD_5 (1 day), TSS (1 day), electrical conductivity (1/week), and pH (1/week) have been retained from previous Order R5-2008-0059-01.

B. Effluent Monitoring

1. Pursuant to the requirements of 40 CFR 122.44(i)(2) effluent monitoring is required for all constituents with effluent limitations. Effluent monitoring is necessary to assess compliance with effluent limitations, assess the effectiveness of the treatment process, and to assess the impacts of the discharge on the receiving stream.

2. Secondary effluent monitoring frequencies and sample types for BOD, TSS, total coliform, ammonia, pH, total residual chlorine, flow, dissolved oxygen, temperature, total dissolved solids, hardness, mercury (total), mercury (methyl), boron, total organic carbon, chlorpyrifos, diazinon, standard minerals, and priority pollutants have been retained from previous Order R5-2008-0059-01.

<u>The Discharger does not monitor the secondary effluent directly for total residual chlorine. Instead, the Discharger monitors the secondary effluent for dechlorinating agent residual to demonstrate compliance with the total residual chlorine effluent limits. Continuous monitoring analyzers for chlorine residual or for dechlorination agent residual in the effluent are appropriate methods for compliance determination. A positive residual dechlorination agent in the effluent indicates that chlorine is not present in the discharge, which demonstrates compliance with the effluent limitations.</u>

<u>The Facility is operated to ensure a positive chlorine residual is never discharged. The Discharger continuously monitors the effluent for sulfur dioxide residual. The calibration of the analyzers is checked by operations at a minimum of twice daily, morning and afternoon. The sulfur dioxide residual analyzers are connected to two critical alarms. A sulfur dioxide residual of 1.0 ppm triggers the first alarm. The alarm is sent to SCADA, which alerts the operator. If the sulfur dioxide levels continue to drop and the residual reaches 0.5 ppm, the system opens valves to allow the effluent to flow in a loop contained within the chlorine contact basin. A hardwire fail-safe interlock system is in place on these valves, which will not allow discharge pumps to restart until the alarm conditions are manually cleared and satisfied.</u>

3. Tertiary effluent monitoring frequencies and sample types for BOD, TSS, total coliform, ammonia, pH, nitrate, nitrite, flow, dissolved oxygen, temperature, total dissolved solids, hardness, mercury (total), mercury (methyl), boron, chlorpyrifos, diazinon, standard minerals, and priority pollutants have been retained from previous Order R5-2008-0059-01.

4. Secondary effluent monitoring frequencies have been reduced for aluminum, carbon tetrachloride, chloride, copper, dibromochloromethane, dichlorobromomethane, molybdenum, nitrate, nitrite, acute toxicity, manganese, iron, electrical conductivity, settleable solids, and phosphorus. Based on the monitoring over the previous permit term, the reduced frequencies are sufficient to assess compliance with effluent limitations, assess the effectiveness of the treatment process, and to assess the impacts of the discharge on the receiving stream.

5. Tertiary effluent monitoring frequencies have been reduced for aluminum, chloride, copper, molybdenum, acute toxicity, manganese, iron, electrical conductivity, and phosphorus. Based on the monitoring over the previous permit term, the reduced frequencies are sufficient to assess compliance with effluent limitations, assess the effectiveness of the treatment process, and to assess the impacts of the discharge on the receiving stream.

6. Monitoring data collected over the existing permit term from the secondary effluent for selenium, bromoform, chloroform, and oil and grease did not demonstrate reasonable potential to exceed water quality objectives/criteria. Thus, specific monitoring requirements for these parameters have not been retained from Order No.R5-2008-0059-01.

7. Monitoring data collected over the existing permit term from the tertiary effluent for carbon tetrachloride, dibromochloromethane, dichlorobromomethane, selenium, settleable solids, bromoform, chloroform, oil and grease, and total organic carbon did not demonstrate reasonable potential to exceed water quality objectives/criteria. Thus, specific monitoring requirements for these parameters have not been retained from Order No.R5-2008-0059-01.

8. The SIP states that if "…*all reported detection limits of the pollutant in the effluent are greater than or equal to the C [water quality criterion or objective] value, the RWQCB [Regional Water Board] shall establish interim requirements…that require additional monitoring for the pollutant*…." All reported detection limits for some priority pollutants are greater than or equal to corresponding applicable water quality criteria or objectives. Monitoring for these constituents has been included in this Order in accordance with the SIP.

9. California Water Code section 13176, subdivision (a), states: "The analysis of any material required by [Water Code sections 13000-16104] shall be performed by a laboratory that has accreditation or certification pursuant to Article 3 (commencing with Section 100825) of Chapter 4 of Part 1 of Division 101 of the Health and Safety Code." The Department of Public Health certifies laboratories through its Environmental Laboratory Accreditation Program (ELAP).

Section 13176 cannot be interpreted in a manner that would violate federal holding time requirements that apply to NPDES permits pursuant to the Clean Water Act. (Wat. Code §§ 13370, subd. (c), 13372, 13377.) Section 13176 is inapplicable to NPDES permits to the extent it is inconsistent with Clean Water Act requirements.

(Wat. Code § 13372, subd. (a).) The holding time requirements are 15 minutes for chlorine residual, dissolved oxygen, and pH, and immediate analysis is required for temperature. (40 C.F.R. § 136.3(e), Table II)

10. **Chlorpyrifos and Diazinon**. This Order requires that pollutants be analyzed using the analytical methods described in 40 CFR Part 136 or an EPA approved Alternate Testing Procedure. However, where no methods are specified for a given pollutant that meet a specific reporting limit or method performance standard, an alternate method can be approved by the Central Valley Water Board. This Order requires either EPA 8141A or EPA 625M for chlorpyrifos and diazinon. These alternate analytical methods are necessary to determine compliance with the effluent limits for these constituents. Basin Plan water quality objectives for chlorpyrifos and diazinon are 0.015 µg/L and 0.1 µg/L, respectively (as a 4-day average. See Attachment F, Section IV.C.3.b.i.(a) for more information). Therefore, chlorpyrifos and diazinon must be analyzed using analytical methods that have a lower MDL than the Basin Plan water quality objectives.

C. Whole Effluent Toxicity Testing Requirements

1. **Acute Toxicity.** Monthly 96-hour bioassay testing is required to demonstrate compliance with the effluent limitation for acute toxicity.

2. **Chronic Toxicity.** Monthly chronic whole effluent toxicity testing is required in order to demonstrate compliance with the Basin Plan's narrative toxicity objective.

D. Receiving Water Monitoring

1. Surface Water

Receiving water monitoring is necessary to assess compliance with receiving water limitations and to assess the impacts of the discharge on the receiving stream.

E. Other Monitoring Requirements

1. Biosolids Monitoring – NOT APPLICABLE

2. Water Supply Monitoring

Water supply monitoring is required to evaluate the source of constituents in the wastewater.

3. UV Disinfection System Monitoring

UV system specifications and monitoring and reporting ~~is~~ are required ~~when the UV system becomes operational~~ to ensure that ~~adequate~~ the UV ~~dosage is applied~~

~~to the wastewater~~ disinfection system is operated properly to adequately inactivate pathogens in the wastewater. UV Disinfection system monitoring is imposed to achieve equivalency ~~pursuant~~ to requirements established by the California Department of Public Health (DPH), and the National Water Research Institute (NWRI), and American Water Works Association Research Foundation NWRI/AWWARF's *"Ultraviolet Disinfection Guidelines for Drinking Water and Water Reuse."*

4. Effluent and Receiving Water Characterization Study.

An effluent and receiving water monitoring study is required to ensure adequate information is available for the next permit renewal. During the third or fourth year of this permit term, the Discharger is required to conduct monthly monitoring of the effluent at EFF-001A and EFF-001B and of the receiving water at RSW-001 for all priority pollutants and other constituents of concern as described in Attachment I. Dioxin and furan sampling shall be performed twice during the year, as described in Attachment I.

VII. RATIONALE FOR PROVISIONS

A. Standard Provisions

Standard Provisions, which apply to all NPDES permits in accordance with 40 CFR 122.41, and additional conditions applicable to specified categories of permits in accordance with 40 CFR 122.42, are provided in Attachment D. The discharger must comply with all standard provisions and with those additional conditions that are applicable under 40 CFR 122.42.

40 CFR 122.41(a)(1) and (b) through (n) establish conditions that apply to all State-issued NPDES permits. These conditions must be incorporated into the permits either expressly or by reference. If incorporated by reference, a specific citation to the regulations must be included in the Order. 40 CFR 123.25(a)(12) allows the state to omit or modify conditions to impose more stringent requirements. In accordance with 40 CFR 123.25, this Order omits federal conditions that address enforcement authority specified in 40 CFR 122.41(j)(5) and (k)(2) because the enforcement authority under the CWC is more stringent. In lieu of these conditions, this Order incorporates by reference CWC section 13387(e).

B. Special Provisions

1. Reopener Provisions

~~**a. Pollution Prevention.** This Order requires the Discharger prepare pollution prevention plans (PPPs) following CWC section 13263.3(d)(3) for electrical conductivity and ammonia. In addition, Time Schedule Order R5-2012-XXXX requires PPPs for aluminum, copper, and iron. This reopener provision allows~~

~~the Central Valley Water Board to reopen this Order for addition and/or modification of effluent limitations and requirements for these constituents based on a review of the PPPs.~~

~~b~~a. **Whole Effluent Toxicity (VI.C.1.c).** This Order requires the Discharger to investigate the causes of, and identify corrective actions to reduce or eliminate effluent toxicity through a Toxicity Reduction Evaluation (TRE). This Order may be reopened to include a numeric chronic toxicity limitation, a new acute toxicity limitation, and/or a limitation for a specific toxicant identified in the TRE. Additionally, if a numeric chronic toxicity water quality objective is adopted by the State Water Board, this Order may be reopened to include a numeric chronic toxicity limitation based on that objective.

~~c~~b. **Water Effects Ratio (WER) and Metal Translators (VI.C.1.d).** A default WER of 1.0 has been used in this Order for calculating CTR criteria for applicable priority pollutant inorganic constituents. In addition, default dissolved-to-total metal translators have been used to convert water quality objectives from dissolved to total recoverable when developing effluent limitations for non-priority pollutant metals. If the Discharger performs studies to determine site-specific WERs and/or site-specific dissolved-to-total metal translators, this Order may be reopened to modify the effluent limitations for the applicable inorganic constituents.

c. **Ultraviolet (UV) Disinfection Operating Specifications (VI.C.1.e).** UV System specifications are required to ensure that the UV system is operated to achieve the required pathogen removal. UV disinfection system specifications and monitoring and reporting requirements are required to ensure that adequate UV dosage is applied to the wastewater to inactivate pathogens (e.g., viruses) in the wastewater. UV dosage is dependent on several factors such as UV transmittance, UV power setting, wastewater turbidity, and wastewater flow through the UV disinfection system. The UV specifications in this Order are based on the NWRI guidelines. If the Discharger conducts a site-specific UV Engineering study that identifies site-specific UV operating specifications that will achieve the virus inactivation required by Title 22 for disinfected tertiary recycled water, this Order may be reopened to modify the UV specifications, in accordance with Reopener Provision VI.C.1.e.

d. **Molybdenum Effluent Limits (VI.C.1.f).** This Order allows a dilution credit for molybdenum for development of water quality-based effluent limits. However, the amount of dilution allowed has been reduced, based on the Facility's performance to control molybdenum. A maximum daily performance-based effluent limit of 23 µ/L was calculated for molybdenum based on effluent data from 2001 to 2007. If the Discharger submits new monitoring results with acceptable method detection limits (MDLs) and reporting limits (RLs) (Attachment F, Section IV.C.3.d.xii.(b)), that justifies a different performance-based effluent limit for molybdenum, this Order may be reopened to modify the effluent limitations for molybdenum.

2. Special Studies and Additional Monitoring Requirements

a. Chronic Whole Effluent Toxicity Requirements. The Basin Plan contains a narrative toxicity objective that states, "All waters shall be maintained free of toxic substances in concentrations that produce detrimental physiological responses in human, plant, animal, or aquatic life." (Basin Plan at page **III-8.00**) Based on whole effluent chronic toxicity testing performed by the Discharger from February 2009 through March 2011, the discharge has reasonable potential to cause or contribute to an in-stream excursion above of the Basin Plan's narrative toxicity objective.

This provision provides a numeric toxicity monitoring trigger and requirements for accelerated monitoring, as well as, requirements for TRE initiation if toxicity has been demonstrated.

Monitoring Trigger. A numeric toxicity monitoring trigger of **> 1** TUc (where TUc = 100/NOEC) is applied in the provision, because this Order does not allow any dilution for the chronic condition. Therefore, a TRE is triggered when the effluent exhibits toxicity at 100% effluent.

Accelerated Monitoring. The provision requires accelerated WET testing when a regular WET test result exceeds the monitoring trigger. The purpose of accelerated monitoring is to determine, in an expedient manner, whether there is toxicity before requiring the implementation of a TRE. Due to possible seasonality of the toxicity, the accelerated monitoring should be performed in a timely manner, preferably taking no more than 2 to 3 months to complete.

The provision requires accelerated monitoring consisting of four chronic toxicity tests in a six-week period (i.e., one test every two weeks) using the species that exhibited toxicity. Guidance regarding accelerated monitoring and TRE initiation is provided in the *Technical Support Document for Water Quality-based Toxics Control,* EPA/505/2-90-001, March 1991 (TSD). The TSD at page 118 states, "*EPA recommends if toxicity is repeatedly or periodically present at levels above effluent limits more than 20 percent of the time, a TRE should be required.*" Therefore, four accelerated monitoring tests are required in this provision. If no toxicity is demonstrated in the four accelerated tests, then it demonstrates that toxicity is not present at levels above the monitoring trigger more than 20 percent of the time (only 1 of 5 tests are toxic, including the initial test). However, notwithstanding the accelerated monitoring results, if there is adequate evidence of effluent toxicity (i.e. toxicity present exceeding the monitoring trigger more than 20 percent of the time), the Executive Officer may require that the Discharger initiate a TRE.

See the WET Accelerated Monitoring Flow Chart (Figure F-1), below, for further clarification of the accelerated monitoring requirements and for the decision points for determining the need for TRE initiation.

TRE Guidance. The Discharger is required to prepare a TRE Workplan in accordance with USEPA guidance. Numerous guidance documents are available, as identified below:

- Toxicity Reduction Evaluation Guidance for Municipal Wastewater Treatment Plants, EPA/833-B-99/002, August 1999.
- Generalized Methodology for Conducting Industrial Toxicity Reduction Evaluations (TREs), EPA/600/2-88/070, April 1989.
- Methods for Aquatic Toxicity Identification Evaluations: Phase I Toxicity Characterization Procedures, Second Edition, EPA 600/6-91/003, February 1991.
- Toxicity Identification Evaluation: Characterization of Chronically Toxic Effluents, Phase I, EPA/600/6-91/005F, May 1992.
- Methods for Aquatic Toxicity Identification Evaluations: Phase II Toxicity Identification Procedures for Samples Exhibiting Acute and Chronic Toxicity, Second Edition, EPA/600/R-92/080, September 1993.
- Methods for Aquatic Toxicity Identification Evaluations: Phase III Toxicity Confirmation Procedures for Samples Exhibiting Acute and Chronic Toxicity, Second Edition, EPA 600/R-92/081, September 1993.
- Methods for Measuring the Acute Toxicity of Effluents and Receiving Waters to Freshwater and Marine Organisms, Fifth Edition, EPA-821-R-02-012, October 2002.
- Short-term Methods for Estimating the Chronic Toxicity of Effluents and Receiving Waters to Freshwater Organisms, Fourth Edition, EPA-821-R-02-013, October 2002.
- Technical Support Document for Water Quality-based Toxics Control, EPA/505/2-90-001, March 1991.

Figure F-1
WET Accelerated Monitoring Flow Chart

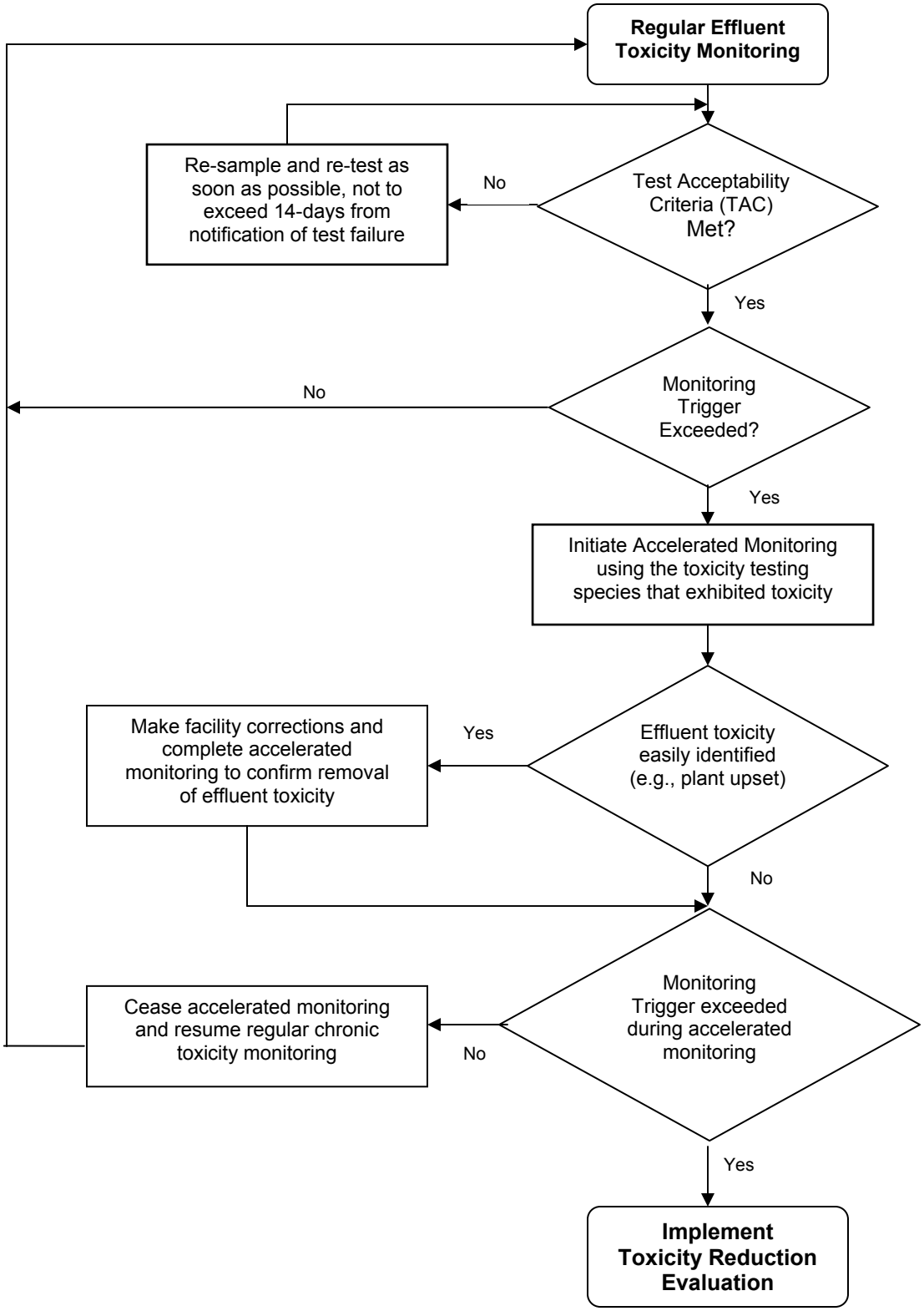

~~**b. Long-Term Criteria Mixing Zone/Dilution Study.** This Order allows mixing zones and dilution credits for human health carcinogen water quality criteria and agricultural water quality criteria, which are long-term criteria. For these long-term criteria, critical environmental impacts are expected to occur far downstream from the discharge, and the mixing zones have been allowed to extend to the point of complete mixing. However, the Discharger's mixing zone study only evaluated mixing to a point 200 meters downstream of the discharge. Therefore, the point of complete mixing was not determined, and although a mixing zone was allowed in the previous permit, the edge of mixing zone was not defined. The State Water Board found in a precedential water quality order (WQ 2009 0003 for the City of Tracy Wastewater Treatment Plant) that it is necessary to define the edge of all mixing zones, including mixing zones for long-term criteria where any impacts are expected to occur far downstream after complete mixing. This Order carries forward the mixing zone and dilution credits for human health carcinogen criteria from the previous permit, but requires the Discharger submit a study that demonstrates the edge of the mixing zone. The Discharger shall conduct a study to evaluate the point of complete mixing under critical reasonable worst-case conditions.~~

3. Best Management Practices and Pollution Prevention

a. CWC section 13263.3(d)(3) Pollution Prevention Plans. A pollution prevention plan for mercury, electrical conductivity, and ammonia is required in this Order per CWC section 13263.3(d)(1)(C). The pollution prevention plans required in section VI.C.3.a (mercury), VI.C.7.d (electrical conductivity), and VI.C.7.e (ammonia) of this Order shall, at a minimum, meet the requirements outlined in CWC section 13263.3(d)(3). The minimum requirements for the pollution prevention plans include the following:

i. An estimate of all of the sources of a pollutant contributing, or potentially contributing, to the loadings of a pollutant in the treatment plant influent.

ii. An analysis of the methods that could be used to prevent the discharge of the pollutants into the Facility, including application of local limits to industrial or commercial dischargers regarding pollution prevention techniques, public education and outreach, or other innovative and alternative approaches to reduce discharges of the pollutant to the Facility. The analysis also shall identify sources, or potential sources, not within the ability or authority of the Discharger to control, such as pollutants in the potable water supply, airborne pollutants, pharmaceuticals, or pesticides, and estimate the magnitude of those sources, to the extent feasible.

iii. An estimate of load reductions that may be attained through the methods identified in subparagraph ii.

iv. A plan for monitoring the results of the pollution prevention program.

v. A description of the tasks, cost, and time required to investigate and implement various elements in the pollution prevention plan.

vi. A statement of the Discharger's pollution prevention goals and strategies, including priorities for short-term and long-term action, and a description of the Discharger's intended pollution prevention activities for the immediate future.

vii. A description of the Discharger's existing pollution prevention programs.

viii. An analysis, to the extent feasible, of any adverse environmental impacts, including cross-media impacts or substitute chemicals that may result from the implementation of the pollution prevention program.

ix. An analysis, to the extent feasible, of the costs and benefits that may be incurred to implement the pollution prevention program.

4. Construction, Operation, and Maintenance Specifications

a. This Order requires that wastewater be oxidized, filtered, and adequately disinfected pursuant to DPH reclamation criteria, CCR, Title 22, division 4, chapter 3, (Title 22), or equivalent.

b. Ultraviolet Light Disinfection (UV) System Operating Specifications. This Order requires that wastewater shall be oxidized, filtered, and adequately disinfected pursuant to the Department of Public Health (DPH) reclamation criteria, CCR, Title 22, division 4, chapter 3, (Title 22), or equivalent. To ensure that the UV disinfection system is operated to achieve the required pathogen removal, this Order includes effluent limits for total coliform organisms, and UV Disinfection System operating specifications. Compliance with total coliform effluent limits alone does not ensure that pathogens in the municipal wastewater have been deactivated by the UV disinfection system. Compliance with both the effluent limits and the UV disinfection operating specifications demonstrates compliance with the equivalency to Title 22 disinfection requirement.

The National Water Research Institute (NWRI) and American Water Works Association Research Foundation NWRI/AWWRF's "*Ultraviolet Disinfection Guidelines for Drinking Water and Water Reuse"*, first published in December 2000 and revised as a Second Edition dated May 2003 (NWRI guidelines), includes UV operating specifications for compliance with Title 22 disinfected tertiary recycled water. For water recycling in accordance with Title 22, UV systems shall be ~~an~~ approved systems included in the Treatment Technology Report for Recycled Water, December 2009 (or a later version, as applicable) published by the DPH. ~~The~~ UV systems shall also conform to all requirements and operating specifications of the NWRI guidelines. A

Memorandum dated 1 November 2004 issued by DPH to Regional Water Board executive offices recommended that provisions be included in permits for water recycling treatment plants employing UV disinfection requiring Dischargers to establish fixed cleaning frequency of lamp sleeves, as well as, include provisions that specify minimum delivered UV dose that must be maintained (per the NWRI Guidelines).

UV System operating specifications are required to ensure that the UV system is operated to achieve the required pathogen removal. UV disinfection system specifications and monitoring and reporting requirements are required to ensure that adequate UV dosage is applied to the wastewater to inactivate pathogens (e.g., viruses and bacteria) in the wastewater. ~~UV dosage is dependent on several factors such as UV transmittance, UV power setting, wastewater turbidity, and wastewater flow through the UV disinfection system.~~ This Order includes an operating specification for a minimum hourly average UV dose of 80 mJ/cm^2, which is recommended by the NWRI Guidelines for UV disinfection following membrane filtration to achieve the virus inactivation equivalent to Title 22 disinfected tertiary recycled water. A minimum hourly average UV transmittance of 55%, per the NWRI Guidelines, and operating specifications to require proper maintenance of the lamp sleeves are also required. If the Discharger conducts a site-specific UV Engineering study that identifies site-specifc UV operating specifications that will achieve the virus inactivation equivalent to Title 22 disinfected tertiary recycled water, this Order may be reopened to modify the UV operating specifications, in accordance with Reopener Provision VI.C.1.e.

Turbidity is also included as an operational specification as an indicator of the effectiveness of the treatment process and to assure the membranes are operated properly to achieve the required level of disinfection ~~compliance with effluent limitations for total coliform organisms~~. The tertiary treatment process utilized at this Facility includes membrane filtration that is capable of reliably meeting a turbidity limitation of 0.2 nephelometric turbidity units (NTU) as a daily average. Failure of the treatment system such that virus removal is impaired would normally result in increased particles in the effluent, which result in higher effluent turbidity and could impact UV dosage. Turbidity has a major advantage for monitoring ~~filter~~ membrane performance, allowing immediate detection of ~~filter~~ membrane failure and rapid corrective action. The operational specification requires that turbidity prior to disinfection shall not exceed 0.2 NTU as a daily average; 0.5 NTU, more than 5 percent of the time within a 24-hour period, and an instantaneous maximum of 1 NTU.

Minimum UV dosage, UV transmittance, and turbidity specifications are included as operating criteria in section VI.C.4.a. of this Order and section IX.C of the Monitoring and Reporting Program (Attachment E) includes monitoring requirements to ensure that adequate disinfection of wastewater is achieved.

5. Special Provisions for Municipal Facilities (POTWs Only)

a. Pretreatment Requirements.

i. The federal CWA section 307(b), and federal regulations, 40 CFR Part 403, require publicly owned treatment works to develop an acceptable industrial pretreatment program. A pretreatment program is required to prevent the introduction of pollutants, which will interfere with treatment plant operations or sludge disposal, and prevent pass through of pollutants that exceed water quality objectives, standards or permit limitations. Pretreatment requirements are imposed pursuant to 40 CFR Part 403.

ii. The Discharger shall implement and enforce its approved pretreatment program and is an enforceable condition of this Order. If the Discharger fails to perform the pretreatment functions, the Regional Water Board, the State Water Board or USEPA may take enforcement actions against the Discharger as authorized by the CWA.

b. The State Water Board issued General Waste Discharge Requirements for Sanitary Sewer Systems, Water Quality Order No. 2006-0003-DWQ (General Order) on 2 May 2006. The General Order requires public agencies that own or operate sanitary sewer systems with greater than one mile of pipes or sewer lines to enroll for coverage under the General Order. The General Order requires agencies to develop sanitary sewer management plans (SSMPs) and report all sanitary sewer overflows (SSOs), among other requirements and prohibitions.

Furthermore, the General Order contains requirements for operation and maintenance of collection systems and for reporting and mitigating sanitary sewer overflows. Inasmuch that the Discharger's collection system is part of the system that is subject to this Order, certain standard provisions are applicable as specified in Provisions, section VI.C.5. For instance, the 24-hour reporting requirements in this Order are not included in the General Order. The Discharger must comply with both the General Order and this Order. The Discharger and public agencies that are discharging wastewater into the facility were required to obtain enrollment for regulation under the General Order by 1 December 2006.

6. Other Special Provisions

a. <u>The year-round tertiary discharge shall be oxidized, filtered, and adequately disinfected pursuant to the Department of Public Health (DPH) reclamation criteria, CCR, Title 22, division 4, chapter 3, (Title 22), or equivalent.</u>

<u>For the year-round discharge, this Order requires the Discharger provide treatment equivalent to Title 22 disinfected tertiary recycled water, which is</u>

defined in Title 22 as a pathogen-free wastewater[1]. This Order includes effluent limits and operating specifications to ensure this level of disinfection, including effluent limits for total coliform organisms (Effluent Limitations, Section IV.A.2.d), and operating specifications for the ultraviolet (UV) disinfection system (e.g., turbidity, UV dose, and UV transmittance) (Special Provisions, Section VI.C.4.a). Compliance with the effluent limits and operating specifications demonstrates compliance with the equivalency to Title 22 disinfection requirement.

b. **Ownership Change.** To maintain the accountability of the operation of the Facility, the Discharger is required to notify the succeeding owner or operator of the existence of this Order by letter if, and when, there is any change in control or ownership of land or waste discharge facilities presently owned or controlled by the Discharger.

7. **Compliance Schedules**

a. **Tertiary-level Treated Discharge, Phase 1A, Phase 2, and Phase 3.** The Discharger has requested a total expansion of allowable flows to be discharged up to 19.1 mgd year round to SJR. These provisions are necessary to comply with the Antidegradation Policy; thus, the Discharger must comply with each provision before the permitted tertiary effluent flow may be increased in each applicable phase.

b. **Compliance Schedule for Final Effluent limitations for Electrical Conductivity.** On 30 January 2012, the Discharger submitted a compliance schedule justification for Electrical Conductivity and requested continuation of the compliance schedule allowed in prevous Order R5-2008-0059-01. The compliance schedule justification included all items specified in the State Water Board's Compliance Schedule Policy. The Basin Plan states that, "Existing NPDES point source dischargers are low priority and subject to the compliance schedules for low priority discharges in Table IV-4.3." The TMDL requires that POTWs comply with the water quality objectives for EC by 28 July 2022, for wet through dry years and 28 July 2026 for critical years (Basin Plan, Section 19, Table IV-4.3, pg IV-32.03). The Discharger shall comply with a time schedule to ensure compliance with the final effluent limitations for Electrical Conductivity, in accordance with the Salinity and Boron TMDL. Final compliance is required by 28 July 2022, for wet through dry years and 28 July 2026 for critical years.

Since the reduction in effluent salinity is a complex issue that may require the development of new lower salinity water supplies or other long-term solutions, the compliance schedule is reasonable and necessary. Consistent with the Central Valley Water Board's recommendations, this Order requires the

[1] CCR section 60301.230 defines "disinfected tertiary recycled water" as a disinfection process that, when combined with the filtration process, has been demonstrated to inactivate and/or remove 99.999 percent of the plaqueforming units of F-specific bacteriophage MS2, or polio virus in the wastewater, and the effluent total coliform levels do not exceed 2.2 MPN/100 mL as a 7-day median or 23 MPN/100 mL more than once in a 30-day period.

Discharger to continue implemention of the salinity source control program ~~submitted by the Discharger on XXXX~~. This Order also contains interim performance based effluent limitations for EC.

c. **Compliance Schedule for Final Effluent Limitations for Ammonia.** On 30 January 2012, the Discharger submitted a compliance schedule justification for ammonia that requested a continuation and a lengthening of the compliance schedule provided in previous Order R5-2008-0059-01. The compliance schedule justification included all items specified in the State Water Board's Compliance Schedule Policy. The compliance schedule has been extended from the previous Order due to delays in funding for the Phase 2 upgrade project. As this compliance schedule is greater than one year, the Discharger shall submit semi-annual progress reports in accordance with the Monitoring and Reporting Program (Attachment E, Section X.D.1.) This Order also contains interim water quality-based effluent limitations for ammonia, based on the USEPA recommended acute (1-hour average) criterion that protects against acute toxicity.

VIII. PUBLIC PARTICIPATION

The Regional Water Board is considering the issuance of WDRs that will serve as an NPDES permit for the Facility. As a step in the WDR adoption process, the Regional Water Board staff has developed tentative WDRs. The Regional Water Board encourages public participation in the WDR adoption process.

A. Notification of Interested Parties

The Central Valley Water Board has notified the Discharger and interested agencies and persons of its intent to prescribe waste discharge requirements for the discharge and has provided them with an opportunity to submit their written comments and recommendations. Notification was provided through the following **[Describe Notification Process (e.g., newspaper name and date)]**

B. Written Comments

The staff determinations are tentative. Interested persons are invited to submit written comments concerning these tentative WDRs. Comments must be submitted either in person or by mail to the Executive Office at the Regional Water Board at the address above on the cover page of this Order.

To be fully responded to by staff and considered by the Regional Water Board, written comments must be received at the Regional Water Board offices by 5:00 p.m. on **20 April 2012**.

C. Public Hearing

The Central Valley Water Board will hold a public hearing on the tentative WDRs during its regular Board meeting on the following date and time and at the following location:

Date: **7/8 June 2012**
Time: 8:30 a.m.
Location: Regional Water Quality Control Board, Central Valley Region
11020 Sun Center Dr., Suite #200
Rancho Cordova, CA 95670

Interested persons are invited to attend. At the public hearing, the Regional Water Board will hear testimony, if any, pertinent to the discharge, WDRs, and permit. Oral testimony will be heard; however, for accuracy of the record, important testimony should be in writing.

Please be aware that dates and venues may change. Our Web address is www.waterboards.ca.gov/centralvalley where you can access the current agenda for changes in dates and locations.

D. Waste Discharge Requirements Petitions

Any aggrieved person may petition the State Water Board to review the decision of the Regional Water Board regarding the final WDRs. The petition must be submitted within 30 days of the Regional Water Board's action to the following address:

State Water Resources Control Board
Office of Chief Counsel
P.O. Box 100, 1001 I Street
Sacramento, CA 95812-0100

E. Information and Copying

The Report of Waste Discharge, related documents, tentative effluent limitations and special provisions, comments received, and other information are on file and may be inspected at the address above at any time between 8:30 a.m. and 4:45 p.m., Monday through Friday. Copying of documents may be arranged through the Regional Water Board by calling (916) 464-3291.

F. Register of Interested Persons

Any person interested in being placed on the mailing list for information regarding the WDRs and NPDES permit should contact the Regional Water Board, reference this Facility, and provide a name, address, and phone number.

G. Additional Information

Requests for additional information or questions regarding this order should be directed to Dania Jimmerson at (916) 464-4742.

ATTACHMENT G – SUMMARY OF REASONABLE POTENTIAL ANALYSIS

Secondary Effluent

Constituent	Units	MEC	B	C	CMC	CCC	Water & Org	Org. Only	Basin Plan	MCL	Reasonable Potential?
Aluminum	ug/L	370	2800	750	750		N/A	N/A	N/A	200	**Yes**
Ammonia (as N)[1]	mg/L	17.1	0.18	2.1	2.1	3.57	N/A	N/A	N/A	N/A	**Yes**
Carbon tetrachloride[2,3]	ug/L	3.4	<0.06	0.25	N/A	N/A	0.25	4.4	N/A	0.5	**Yes**
Chloride[4]	mg/L	222	218	230	860	230	N/A	N/A	N/A	250	**No**
Chlorodibromomethane[2]	ug/L	6.94	<0.160	0.41	N/A	N/A	0.41	34	N/A	80	**Yes**
Copper, Total recoverable	ug/L	17	16	23 [5]/5 [6]	26 [5]/7 [6]	23 [5]/5 [6]	1300	N/A	N/A	1000	**Yes**
Dichlorobromomethane[2]	ug/L	2.55	<0.14	0.56	N/A	N/A	0.56	46	N/A	80	**Yes**
Iron, Total recoverable	ug/L	307 [7]	3067 [7]	300	N/A	1000	N/A	N/A	N/A	300	**Yes**
Manganese	ug/L	24 [7]	290 [7]	50	N/A	N/A	100	N/A	N/A	50	**Yes**
Mercury, Total recoverable	ug/L	0.0041	0.0066	0.05	N/A	N/A	0.05	0.051	N/A	2	**No**
Molybdenum, Total recoverab	ug/L	21	8	10	N/A	N/A	N/A	N/A	10/15 [9]	N/A	**Yes**
Nitrate + Nitrite (as N) [10]	mg/L			10	N/A	N/A	N/A	N/A	N/A	10	**No**
Selenium, Total recoverable	ug/L	2.3	2.6	5	20	5	170	4200	N/A	50	**No**
Specific Conductance (EC)	umhos/cm	1920	1940	700	N/A	N/A	N/A	N/A	700/1000 [11]	900	**Yes**
Total Dissolved Solids (TDS)	mg/L	680	1510	450	N/A	N/A	N/A	N/A	N/A	500	**Yes**

General Note: All inorganic concentrations are given as a total recoverable.
MEC = Maximum Effluent Concentration
B = Maximum Receiving Water Concentration or lowest detection level, if non-detect
C = Criterion used for Reasonable Potential Analysis
CMC = Criterion Maximum Concentration (CTR or NTR)
CCC = Criterion Continuous Concentration (CTR or NTR)
Water & Org = Human Health Criterion for Consumption of Water & Organisms (CTR or NTR)
Org. Only = Human Health Criterion for Consumption of Organisms Only (CTR or NTR)
Basin Plan = Numeric Site-specific Basin Plan Water Quality Objective
MCL = Drinking Water Standards Maximum Contaminant Level
NA = Not Available
ND = Non-detect

Footnotes:
(1) Based on maximum allowable effluent pH of 8.5 for acute criterion (CMC) and critical 30-day downstream receiving water pH of 7.3 and temperature of 20.0°C for 30-day chronic criterion (CCC). CMC = 2.14 mg/L and CCC=3.57 mg/L.
(2) Based on dilution credit of 20:1 and ambient upstream assimilative capacity.
(3) Data from 2007 to 2011 used for RPA for carbon tetrachloride due to insufficient data with acceptable MDLs and RLs since adoption of current permit.
(4) Removed limits, no RP to exceed NAWQC, but effluent exceeds agricultural goal. City has a salt issue, so monitoring needed to assess salt sources for reduction.
(5) CTR criteria based on a reasonable worst-case downstream receiving water hardness of 136 mg/L as $CaCO_3$
(6) CTR criteria based on the lowest observed upstream receiving water hardness of 48 mg/L as $CaCO_3$.
(7) MEC and B are based on the maximum annual averages.
(8) Data from 2001 to 2007 used for RPA for molybdenum due to insufficient data with acceptable MDLs and RLs since adoption of current permit.
(9) The Basin Plan identifies site –specific objectives for molybdenum in the SJR, from the mouth of the Merced River to Vernallis. The maximum (total) concentration objective for molybdenum is 15 µg/L, with a maximum monthly mean objective of 10 µg/L.
(10) Limits removed.
(11) Average monthly of 700 µmhos/cm from 1 April to 31 May and 1000 µmhos/cm from 1 October to 31 March.

Tertiary Effluent

Constituent	Units	MEC	B	C	CMC	CCC	Water & Org	Org. Only	Basin Plan	MCL	Reasonable Potential?
Aluminum	ug/L	61	2800	750	750	750	N/A	N/A	N/A	200	**Yes**
Ammonia (as N)[1]	mg/L	18	0.18	2.14	2.14	3.57	N/A	N/A	N/A	N/A	**Yes**
Carbon tetrachloride[2,3]	ug/L	<0.3	<0.06	0.25	N/A	N/A	0.25	4.4	N/A	0.5	**No**
Chloride[4]	mg/L	222	218	230	860	230	N/A	N/A	N/A	250	**No**
Chlorodibromomethane[2]	ug/L	<0.47	<0.160	0.41	N/A	N/A	0.41	34	N/A	80	**No**
Copper, Total recoverable	ug/L	1.6	16	23 [5]/5 [6]	26 [5]/7 [6]	23 [5]/5 [6]	1300	N/A	N/A	1000	**Yes**
Dichlorobromomethane[2]	ug/L	<0.48	<0.14	0.56	N/A	N/A	0.56	46	N/A	80	**No**
Iron, Total recoverable	ug/L	77	3067 [7]	300	N/A	1000	N/A	N/A	N/A	300	**No**
Manganese	ug/L	27	290 [7]	50	N/A	N/A	100	N/A	N/A	50	**No**
Mercury, Total recoverable	ug/L	0.0032	0.0066	0.05	N/A	N/A	0.05	0.051	N/A	2	**No**
Molybdenum [2, 8]	ug/L	14	8	10	N/A	N/A	N/A	N/A	10/15 [9]	N/A	**Yes**
Nitrate + Nitrite (as N) [10]	mg/L			10	N/A	N/A	N/A	N/A	N/A	10	**Yes**
Selenium, Total recoverable	ug/L	1.9	2.6	5	20	5	170	4200	N/A	50	**No**
Specific Conductance (EC)	umhos/cm	1390	1940	700	N/A	N/A	N/A	N/A	700/1000 [11]	900	**Yes**
Total Dissolved Solids (TDS)	mg/L	746	1510	450	N/A	N/A	N/A	N/A	N/A	500	**Yes**

General Note: All inorganic concentrations are given as a total recoverable.
MEC = Maximum Effluent Concentration
B = Maximum Receiving Water Concentration or lowest detection level, if non-detect
C = Criterion used for Reasonable Potential Analysis
CMC = Criterion Maximum Concentration (CTR or NTR)
CCC = Criterion Continuous Concentration (CTR or NTR)
Water & Org = Human Health Criterion for Consumption of Water & Organisms (CTR or NTR)
Org. Only = Human Health Criterion for Consumption of Organisms Only (CTR or NTR)
Basin Plan = Numeric Site-specific Basin Plan Water Quality Objective
MCL = Drinking Water Standards Maximum Contaminant Level
NA = Not Available
ND = Non-detect

Footnotes:

(1) Based on maximum allowable effluent pH of 8.5 for acute criterion (CMC) and critical 30-day downstream receiving water pH of 7.3 and temperature of 20.0°C for 30-day chronic criterion (CCC). CMC = 2.14 mg/L and CCC=3.57 mg/L.
(2) Based on dilution credit of 20:1 and ambient upstream assimilative capacity.
(3) Data from 2007 to 2011 used for RPA for carbon tetrachloride due to insufficient data with acceptable MDLs and RLs since adoption of current permit.
(4) Removed limits, no RP to exceed NAWQC, but effluent exceeds agricultural goal. City has a salt issue, so monitoring needed to assess salt sources for reduction.
(5) CTR criteria based on a reasonable worst-case downstream receiving water hardness of 136 mg/L as $CaCO_3$.
(6) CTR criteria based on the lowest observed upstream receiving water hardness of 48 mg/L as $CaCO_3$.
(7) MEC and B are based on the maximum annual averages.
(8) Data from 2001 to 2007 used for RPA for molybdenum due to insufficient data with acceptable MDLs and RLs since adoption of current permit.
(9) The Basin Plan identifies site –specific objectives for molybdenum in the SJR, from the mouth of the Merced River to Vernallis. The maximum (total) concentration objective for molybdenum is 15 µg/L, with a maximum monthly mean objective of 10 µg/L.
(10) Limits were removed for the seasonal secondary effluent discharge, but was not removed from the tertiary because there is no data to allow removal to satisfy antibacksliding.
(11) Average monthly of 700 µmhos/cm from 1 April to 31 May and 1000 µmhos/cm from 1 October to 31 March.

ATTACHMENT H – CALCULATION OF WQBELS

Seasonal Secondary Effluent Discharge

Parameter	Units	Most Stringent Criteria			Dilution Factors			HH Calculations			Aquatic Life Calculations									Final Effluent Limitations	
		HH	CMC	CCC	HH	CMC	CCC	ECA_{HH} = $AMEL_{HH}$	AMEL/MDEL $Multiplier_{HH}$	$MDEL_{HH}$	ECA $Multiplier_{acute}$	LTA_{acute}	ECA $Multiplier_{chronic}$	$LTA_{chronic}$	Lowest LTA	AMEL $Multiplier_{95}$	$AMEL_{AL}$	MDEL $Multiplier_{99}$	$MDEL_{AL}$	Lowest AMEL	Lowest MDEL
Aluminum	ug/L	-	750	750	-	0	0	-	-	-	0.45	340.8	0.66	492.1	340.8	1.34	457.0	2.20	750.0	456.8	750
Ammonia (as N)	mg/L	-	2.1	3.57	-	-	-	-	-	-	0.36	0.8	0.81	2.9	0.8	1.49	1.1	2.83	2.1	1.12	2.1
Carbon tetrachloride	ug/L	0.25	-	-	20:1	-	-	4.1	3.19	13	-	-	-	-	*	-	-	-	-	4.1	13
Chlorodibromomethane	ug/L	0.41	-	-	20:1	-	-	5.4	2.83	15	-	-	-	-	*	-	-	-	-	5.4	15
Copper, Total Recoverable	ug/L	-	26	23	-	0	0	-	-	-	0.39	10.1	0.60	13.8	10.1	1.4	14.5	2.6	26.0	14.5	26
Dichlorobromomethane	ug/L	0.56	N/A	N/A	20:1	0	0	9.0	1.50	13.4	-	-	-	*	*	*	*	*	*	9.0	13
Molybdenum, Total Recoverable	ug/L	10/15	-	-	20:1	-	-	98	-	203	-	-	-	-	-	-	-	-	-	98	203 [1]

Year-Round Tertiary Effluent Discharge

Parameter	Units	Most Stringent Criteria			Dilution Factors			HH Calculations			Aquatic Life Calculations									Final Effluent Limitations	
		HH	CMC	CCC	HH	CMC	CCC	ECA_{HH} = $AMEL_{HH}$	AMEL/MDEL $Multiplier_{HH}$	$MDEL_{HH}$	ECA $Multiplier_{acute}$	LTA_{acute}	ECA $Multiplier_{chronic}$	$LTA_{chronic}$	Lowest LTA	AMEL $Multiplier_{95}$	$AMEL_{AL}$	MDEL $Multiplier_{99}$	$MDEL_{AL}$	Lowest AMEL	Lowest MDEL
Aluminum	ug/L	-	750	750	-	0	0	-	-	-	0.45	340.8	0.66	492.1	340.8	1.34	457	2.20	750.0	457	750
Ammonia (as N)	mg/L	-	2.14	3.57	-	-	-	-	-	-	0.35	0.8	0.81	2.9	0.8	1.49	1.1	2.83	2.1	1.12	2.1
Copper, Total Recoverable	ug/L	-	19	12	-	0	0	-	-	-	0.32	6.1	0.53	6.3	6.10	1.6	9.5	3.1	19.0	9.5	19
Molybdenum, Total Recoverable	ug/L	10/15	-	-	20:1	-	-	98	-	203	-	-	-	-	-	-	-	-	-	98	203 [1]

1 A more stringent limit of of 23 µg/L is included in this Order that is calculated in the same way that interim limits are calculated (see Section IV.E.3 below).

ATTACHMENT I – EFFLUENT AND RECEIVING WATER CHARACTERIZATION STUDY

I. Background. Sections 2.4.1 through 2.4.4 of the SIP provide minimum standards for analyses and reporting. (Copies of the SIP may be obtained from the State Water Resources Control Board, or downloaded from http://www.waterboards.ca.gov/iswp/index.html). To implement the SIP, effluent and receiving water data are needed for all priority pollutants. Effluent and receiving water pH and hardness are required to evaluate the toxicity of certain priority pollutants (such as heavy metals) where the toxicity of the constituents varies with pH and/or hardness. Section 3 of the SIP prescribes mandatory monitoring of dioxin congeners. In addition to specific requirements of the SIP, the Central Valley Water Board is requiring the following monitoring:

A. Drinking water constituents. Constituents for which drinking water Maximum Contaminant Levels (MCLs) have been prescribed in the California Code of Regulation are included in the *Water Quality Control Plan, Fourth Edition, for the Sacramento and San Joaquin River Basins* (Basin Plan). The Basin Plan defines virtually all surface waters within the Central Valley Region as having existing or potential beneficial uses for municipal and domestic supply. The Basin Plan further requires that, at a minimum, water designated for use as domestic or municipal supply shall not contain concentrations of chemical constituents in excess of the MCLs contained in the California Code of Regulations.

B. Effluent and receiving water temperature. This is both a concern for application of certain temperature-sensitive constituents, such as fluoride, and for compliance with the Basin Plan's thermal discharge requirements.

C. Effluent and receiving water hardness and pH. These are necessary because several of the CTR constituents are hardness and pH dependent.

D. Dioxin and furan sampling. Section 3 of the SIP has specific requirements for the collection of samples for analysis of dioxin and furan congeners, which are detailed in Attachment ~~J~~I. **~~<Briefly, dischargers classified as minor must collect and analyze one wet season and one dry season sample.>~~** Pursuant to Section 13267 of the California Water Code, this Order includes a requirement for the Discharger to submit monitoring data for the effluent and receiving water as described in Attachment J.

II. Monitoring Requirements.

A. Monthly Monitoring. For one-year period, d~~D~~uring the third or fourth year of the permit term while a river discharge is occurring, monthly samples shall be collected from the effluent (secondary effluent at EFF-001A and tertiary effluent at EFF-001B) and analyzed for the constituents listed in Table I-1. In addition, monthly monitoring of the upstream receiving water (RSW-001) is required for the same constituents monthly for the same one-year period, regardless if a discharge is occurring. The results of such monitoring shall be submitted to the Central Valley Water Board, within 6 months of the last sampling event. Each individual monitoring event shall provide representative sample results for the effluent and upstream receiving water.

B. Semi-annual Monitoring (dioxins and furans only). Semi-annual monitoring is required for dioxins and furans, once during dry weather and once during wet weather, for 1 year within the term of the study. The results of dioxin and furan monitoring shall be submitted to the Central Valley Water Board with the results of the monthly monitoring data at the completion of the Effluent and Receiving Water Characterization Study.

C. Concurrent Sampling. Effluent and receiving water sampling shall be performed at approximately the same time, on the same date.

D. Sample type. All effluent samples shall be taken as 24-hour flow proportioned composite samples (except for monitoring for volatile organic constituents, the effluent samples shall be grab samples). All receiving water samples shall be taken as grab samples.

Table I-1. Priority Pollutants and Other Constituents of Concern

CTR #	Constituent	CAS Number	Criterion Quantitation Limit µg/L or noted	Suggested Test Methods[1]
28	1,1-Dichloroethane	75343	0.5	EPA 8260B
30	1,1-Dichloroethene	75354	0.5	EPA 8260B
41	1,1,1-Trichloroethane	71556	0.5	EPA 8260B
42	1,1,2-Trichloroethane	79005	0.5	EPA 8260B
37	1,1,2,2-Tetrachloroethane	79345	0.5	EPA 8260B
75	1,2-Dichlorobenzene	95501	0.5	EPA 8260B
29	1,2-Dichloroethane	107062	0.5	EPA 8260B
	cis-1,2-Dichloroethene	156592	0.5	EPA 8260B
31	1,2-Dichloropropane	78875	0.5	EPA 8260B
101	1,2,4-Trichlorobenzene	120821	0.5	EPA 8260B
76	1,3-Dichlorobenzene	541731	0.5	EPA 8260B
32	1,3-Dichloropropene	542756	0.5	EPA 8260B
77	1,4-Dichlorobenzene	106467	0.5	EPA 8260B
17	Acrolein	107028	2	EPA 8260B
18	Acrylonitrile	107131	2	EPA 8260B
19	Benzene	71432	0.5	EPA 8260B
20	Bromoform	75252	0.5	EPA 8260B
34	Bromomethane	74839	1	EPA 8260B
21	Carbon tetrachloride	56235	0.5	EPA 8260B
22	Chlorobenzene (mono chlorobenzene)	108907	0.5	EPA 8260B
24	Chloroethane	75003	0.5	EPA 8260B
25	2- Chloroethyl vinyl ether	110758	1	EPA 8260B

CTR #	Constituent	CAS Number	Criterion Quantitation Limit µg/L or noted	Suggested Test Methods[1]
26	Chloroform	67663	0.5	EPA 8260B
35	Chloromethane	74873	0.5	EPA 8260B
23	Dibromochloromethane	124481	0.5	EPA 8260B
27	Dichlorobromomethane	75274	0.5	EPA 8260B
36	Dichloromethane	75092	0.5	EPA 8260B
33	Ethylbenzene	100414	0.5	EPA 8260B
88	Hexachlorobenzene	118741	1	EPA 8260B
89	Hexachlorobutadiene	87683	1	EPA 8260B
91	Hexachloroethane	67721	1	EPA 8260B
94	Naphthalene	91203	10	EPA 8260B
38	Tetrachloroethene	127184	0.5	EPA 8260B
39	Toluene	108883	0.5	EPA 8260B
40	trans-1,2-Dichloroethylene	156605	0.5	EPA 8260B
43	Trichloroethene	79016	0.5	EPA 8260B
44	Vinyl chloride	75014	0.5	EPA 8260B
	Methyl-tert-butyl ether (MTBE)	1634044	0.5	EPA 8260B
	Trichlorofluoromethane	75694	5	EPA 8260B
	1,1,2-Trichloro-1,2,2-Trifluoroethane	76131	10	EPA 8260B
	Styrene	100425	0.5	EPA 8260B
	Xylenes	1330207	0.5	EPA 8260B
60	1,2-Benzanthracene	56553	5	EPA 8270C
85	1,2-Diphenylhydrazine	122667	1	EPA 8270C
45	2-Chlorophenol	95578	2	EPA 8270C
46	2,4-Dichlorophenol	120832	1	EPA 8270C
47	2,4-Dimethylphenol	105679	2	EPA 8270C
49	2,4-Dinitrophenol	51285	5	EPA 8270C
82	2,4-Dinitrotoluene	121142	5	EPA 8270C
55	2,4,6-Trichlorophenol	88062	10	EPA 8270C
83	2,6-Dinitrotoluene	606202	5	EPA 8270C
50	2-Nitrophenol	25154557	10	EPA 8270C
71	2-Chloronaphthalene	91587	10	EPA 8270C
78	3,3'-Dichlorobenzidine	91941	5	EPA 8270C
62	3,4-Benzofluoranthene	205992	10	EPA 8270C
52	4-Chloro-3-methylphenol	59507	5	EPA 8270C
48	4,6-Dinitro-2-methylphenol	534521	10	EPA 8270C
51	4-Nitrophenol	100027	5	EPA 8270C

CTR #	Constituent	CAS Number	Criterion Quantitation Limit µg/L or noted	Suggested Test Methods[1]
69	4-Bromophenyl phenyl ether	101553	10	EPA 8270C
72	4-Chlorophenyl phenyl ether	7005723	5	EPA 8270C
56	Acenaphthene	83329	1	EPA 8270C
57	Acenaphthylene	208968	10	EPA 8270C
58	Anthracene	120127	10	EPA 8270C
59	Benzidine	92875	5	EPA 8270C
61	Benzo(a)pyrene (3,4-Benzopyrene)	50328	0.1	EPA 8270C
63	Benzo(g,h,i)perylene	191242	5	EPA 8270C
64	Benzo(k)fluoranthene	207089	2	EPA 8270C
65	Bis(2-chloroethoxy) methane	111911	5	EPA 8270C
66	Bis(2-chloroethyl) ether	111444	1	EPA 8270C
67	Bis(2-chloroisopropyl) ether	39638329	10	EPA 8270C
68	Bis(2-ethylhexyl) phthalate	117817	3	EPA 8270C
70	Butyl benzyl phthalate	85687	10	EPA 8270C
73	Chrysene	218019	5	EPA 8270C
81	Di-n-butylphthalate	84742	10	EPA 8270C
84	Di-n-octylphthalate	117840	10	EPA 8270C
74	Dibenzo(a,h)-anthracene	53703	0.1	EPA 8270C
79	Diethyl phthalate	84662	2	EPA 8270C
80	Dimethyl phthalate	131113	2	EPA 8270C
86	Fluoranthene	206440	10	EPA 8270C
87	Fluorene	86737	10	EPA 8270C
90	Hexachlorocyclopentadiene	77474	1	EPA 8270C
92	Indeno(1,2,3-c,d)pyrene	193395	0.05	EPA 8270C
93	Isophorone	78591	1	EPA 8270C
98	N-Nitrosodiphenylamine	86306	1	EPA 8270C
96	N-Nitrosodimethylamine	62759	5	EPA 8270C
97	N-Nitrosodi-n-propylamine	621647	5	EPA 8270C
95	Nitrobenzene	98953	10	EPA 8270C
53	Pentachlorophenol	87865	0.2	EPA 8270C
99	Phenanthrene	85018	5	EPA 8270C
54	Phenol	108952	1	EPA 8270C
100	Pyrene	129000	10	EPA 8270C
	Aluminum	7429905	50	EPA 6020/200.8
1	Antimony	7440360	5	EPA 6020/200.8
2	Arsenic	7440382	0.01	EPA 1632

CTR #	Constituent	CAS Number	Criterion Quantitation Limit µg/L or noted	Suggested Test Methods[1]
15	Asbestos	1332214	0.2 MFL >10um	EPA/600/R-93/116(PCM)
	Barium	7440393	100	EPA 6020/200.8
3	Beryllium	7440417	1	EPA 6020/200.8
4	Cadmium	7440439	0.25	EPA 1638/200.8
5a	Chromium (total)	7440473	2	EPA 6020/200.8
5b	Chromium (VI)	18540299	0.5	EPA 7199/1636
6	Copper	7440508	0.5	EPA 6020/200.8
14	Cyanide	57125	5	EPA 9012A
	Fluoride	7782414	0.1	EPA 300
	Iron	7439896	100	EPA 6020/200.8
7	Lead	7439921	0.5	EPA 1638
8	Mercury	7439976	0.0002 (11)	EPA 1669/1631
	Manganese	7439965	20	EPA 6020/200.8
9	Nickel	7440020	5	EPA 6020/200.8
10	Selenium	7782492	5	EPA 6020/200.8
11	Silver	7440224	1	EPA 6020/200.8
12	Thallium	7440280	1	EPA 6020/200.8
	Tributyltin	688733	0.002	EV-024/025
13	Zinc	7440666	10	EPA 6020/200.8
110	4,4'-DDD	72548	0.02	EPA 8081A
109	4,4'-DDE	72559	0.01	EPA 8081A
108	4,4'-DDT	50293	0.01	EPA 8081A
112	alpha-Endosulfan	959988	0.02	EPA 8081A
103	alpha-Hexachlorocyclohexane (BHC)	319846	0.01	EPA 8081A
	Alachlor	15972608	1	EPA 8081A
102	Aldrin	309002	0.005	EPA 8081A
113	beta-Endosulfan	33213659	0.01	EPA 8081A
104	beta-Hexachlorocyclohexane	319857	0.005	EPA 8081A
107	Chlordane	57749	0.1	EPA 8081A
106	delta-Hexachlorocyclohexane	319868	0.005	EPA 8081A
111	Dieldrin	60571	0.01	EPA 8081A
114	Endosulfan sulfate	1031078	0.05	EPA 8081A
115	Endrin	72208	0.01	EPA 8081A
116	Endrin Aldehyde	7421934	0.01	EPA 8081A
117	Heptachlor	76448	0.01	EPA 8081A
118	Heptachlor Epoxide	1024573	0.01	EPA 8081A

CTR #	Constituent	CAS Number	Criterion Quantitation Limit µg/L or noted	Suggested Test Methods[1]
105	Lindane (gamma-Hexachlorocyclohexane)	58899	0.019	EPA 8081A
119	PCB-1016	12674112	0.5	EPA 8082
120	PCB-1221	11104282	0.5	EPA 8082
121	PCB-1232	11141165	0.5	EPA 8082
122	PCB-1242	53469219	0.5	EPA 8082
123	PCB-1248	12672296	0.5	EPA 8082
124	PCB-1254	11097691	0.5	EPA 8082
125	PCB-1260	11096825	0.5	EPA 8082
126	Toxaphene	8001352	0.5	EPA 8081A
	Atrazine	1912249	1	EPA 8141A
	Bentazon	25057890	2	EPA 643/ 515.2
	Carbofuran	1563662	5	EPA 8318
	2,4-D	94757	10	EPA 8151A
	Dalapon	75990	10	EPA 8151A
	1,2-Dibromo-3-chloropropane (DBCP)	96128	0.01	EPA 8260B
	Di(2-ethylhexyl)adipate	103231	5	EPA 8270C
	Dinoseb	88857	2	EPA 8151A
	Diquat	85007	4	EPA 8340/ 549.1/HPLC
	Endothal	145733	45	EPA 548.1
	Ethylene Dibromide	106934	0.02	EPA 8260B/504
	Glyphosate	1071836	25	HPLC/EPA 547
	Methoxychlor	72435	10	EPA 8081A
	Molinate (Ordram)	2212671	2	EPA 634
	Oxamyl	23135220	20	EPA 8318/632
	Picloram	1918021	1	EPA 8151A
	Simazine (Princep)	122349	1	EPA 8141A
	Thiobencarb	28249776	1	HPLC/EPA 639
16	2,3,7,8-TCDD (Dioxin)	1746016	5.00E-06	EPA 8290 (HRGC) MS
	2,4,5-TP (Silvex)	93765	1	EPA 8151A
	Diazinon	333415	0.25	EPA 8141A/GCMS or EPA 625M
	Chlorpyrifos	2921882	1	EPA 8141A/GCMS or EPA 625M
	Ammonia (as N)	7664417		EPA 350.1
	Chloride	16887006		EPA 300.0
	Flow			

CTR #	Constituent	CAS Number	Criterion Quantitation Limit µg/L or noted	Suggested Test Methods[1]
	Hardness (as $CaCO_3$)			EPA 130.2
	Foaming Agents (MBAS)			SM5540C
	Nitrate (as N)	14797558	2,000	EPA 300.0
	Nitrite (as N)	14797650	400	EPA 300.0
	pH		0.1	EPA 150.1
	Phosphorus, Total (as P)	7723140		EPA 365.3
	Specific conductance (EC)			EPA 120.1
	Sulfate		500	EPA 300.0
	Sulfide (as S)			EPA 376.2
	Sulfite (as SO_3)			SM4500-SO3
	Temperature			
	Total Disolved Solids (TDS)			EPA 160.1

1 Alternate methods may be used if noted in the study work plan

III. Additional Study Requirements

A. Laboratory Requirements. The laboratory analyzing the monitoring samples shall be certified by the Department of Health Services in accordance with the provisions of Water Code 13176 and must include quality assurance/quality control data with their reports (ELAP certified).

B. Criterion Quantitation Limit (CQL). The criterion quantitation limits will be equal to or lower than the minimum levels (MLs) in Appendix 4 of the SIP or the detection limits for purposes of reporting (DLRs) below the controlling water quality criterion concentrations summarized in Table I-1 of this Order. In cases where the controlling water quality criteria concentrations are below the detection limits of all approved analytical methods, the best available procedure will be utilized that meets the lowest of the MLs and DLR. Table I-1 contains suggested analytical procedures. The Discharger is not required to use these specific procedures as long as the procedure selected achieves the desired minimum detection level.

C. Method Detection Limit (MDL). The method detection limit for the laboratory shall be determined by the procedure found in 40 CFR Part 136, Appendix B (revised as of May 14, 1999).

D. Reporting Limit (RL). The reporting limit for the laboratory. This is the lowest quantifiable concentration that the laboratory can determine. Ideally, the RL should be equal to or lower than the CQL to meet the purposes of this monitoring.

E. Reporting Protocols. The results of analytical determinations for the presence of chemical constituents in a sample shall use the following reporting protocols:

1. Sample results greater than or equal to the reported RL shall be reported as measured by the laboratory (i.e., the measured chemical concentration in the sample).

2. Sample results less than the reported RL, but greater than or equal to the laboratory's MDL, shall be reported as "Detected, but Not Quantified," or DNQ. The estimated chemical concentration of the sample shall also be reported.

3. For the purposes of data collection, the laboratory shall write the estimated chemical concentration next to DNQ as well as the words "Estimated Concentration" (may shortened to "Est. Conc.). The laboratory, if such information is available, may include numerical estimates of the data quantity for the reported result. Numerical estimates of data quality may be percent accuracy (+ or – a percentage of the reported value), numerical ranges (low and high), or any other means considered appropriate by the laboratory.

4. Sample results that are less than the laboratory's MDL shall be reported as "Not Detected" or ND.

F. **Data Format.** The monitoring report shall contain the following information for each pollutant:

1. The name of the constituent.

2. Sampling location.

3. The date the sample was collected.

4. The time the sample was collected.

5. The date the sample was analyzed. For organic analyses, the extraction data will also be indicated to assure that hold times are not exceeded for prepared samples.

6. The analytical method utilized.

7. The measured or estimated concentration.

8. The required Criterion Quantitation Limit (CQL).

9. The laboratory's current Method Detection Limit (MDL), as determined by the procedure found in 40 CFR Part 136, Appendix B (revised as of May 14, 1999).

10. The laboratory's lowest reporting limit (RL).

11. Any additional comments.

DIOXIN AND FURAN SAMPLING

The CTR includes criteria for 2,3,7,8-tetrachlorodibenzo-pdioxin (2,3,7,8-TCDD). In addition to this compound, there are many congeners of chlorinated dibenzodioxins (2,3,7,8-CDDs) and chlorinated dibenzofurans (2,3,7,8-CDFs) that exhibit toxic effects similar to those of 2,3,7,8-TCDD. The USEPA has published toxic equivalency factors (TEFs) for 17 of the congeners. The TEFs express the relative toxicities of the congeners compared to 2,3,7,8-TCDD (whose TEF equals 1.0). In June 1997, participants in a World Health Organization (WHO) expert meeting revised TEF values for 1,2,3,7,8-PentaCDD, OctaCDD, and OctaCDF. The current TEFs for the 17 congeners, which include the three revised values, are shown below:

Toxic Equivalency Factors (TEFs) for 2,3,7,8-TCDD Equivalents

Congener	TEF
2,3,7,8-TetraCDD	1
1,2,3,7,8-PentaCDD	1.0
1,2,3,4,7,8-HexaCDD	0.1
1,2,3,6,7,8-HexaCDD	0.1
1,2,3,7,8,9-HexaCDD	0.1
1,2,3,4,6,7,8-HeptaCDD	0.01
OctaCDD	0.0001
2,3,7,8-TetraCDF	0.1
1,2,3,7,8-PentaCDF	0.05
2,3,4,7,8-PentaCDF	0.5
1,2,3,4,7,8-HexaCDF	0.1
1,2,3,6,7,8-HexaCDF	0.1
1,2,3,7,8,9-HexaCDF	0.1
2,3,4,6,7,8-HexaCDF	0.1
1,2,3,4,6,7,8-HeptaCDF	0.01
1,2,3,4,7,8,9-HeptaCDF	0.01
OctaCDF	0.0001

The Discharger shall conduct effluent and receiving water monitoring for the 2,3,7,8-TCDD congeners listed above to assess the presence and amounts of the congeners being discharged and already present in the receiving water. Effluent and upstream receiving water shall be monitored for the presence of the 17 congeners once during dry weather and once during wet weather for 1 year within the term of the study.

The Discharger shall report, for each congener, the analytical results of the effluent and receiving water monitoring, including the quantifiable limit and the method detection limit, and the measured or estimated concentration.

In addition, the Discharger shall multiply each measured or estimated congener concentration by its respective TEF value and report the sum of these values.