Public Comment
Dry Year Report
Deadline: 10/15/14 by 12:00 noon

LAW OFFICES OF
PATRICK J. MALONEY

2425 WEBB AVENUE, SUITE 100
ALAMEDA ISLAND, CALIFORNIA 94501-2922

RECEIVED
10-14-14
SWRCB Clerk

PATRICK J. "MIKE" MALONEY (510) 521-4575 THOMAS S. VIRSIK
FAX (510) 521-4623
e-mail: pjmlaw@pacbell.net

Via email to Clerk of the Board commentletters@waterboards.ca.gov
October 14, 2014

State Water Resources Control Board
1001 I Street
Sacramento, CA 95812
Attention: Clerk of the Board

Re: Dry Year Report Comments

Madame Chair:

The Law Office of Patrick J. Maloney (the Law Firm) is providing the within public comments pursuant to the Notice of Solicitation Regarding Improvements to the Implementation and Enforcement of Water Rights During Drought Conditions issued by the State Water Resources Control Board (SWRCB or the Board). These comments are informed to a significant extent by the 1978 Dry Year Report, referenced in the Notice of Solicitation, with which the Law Office largely agrees. Please note that the comments are not filed on behalf of any specific current, past, or potential client. The examples used below have been selected in part because the Law Firm is familiar with those matters.

The sections below are numbered for purposes of reference, rather than to designate priority. The specific queries from the Notice of Solicitation to which this letter offers comments and/or suggestions include 1, 5, 6, and 7, but is not limited to those questions as phrased. This comment letter relies on, inter alia, two prior letters by the Law Office of April 2, 2002 and June 28, 2014 including their listed attachments (including the April 2, 2002 letter), which are enclosed. Recommendations or strong concluding suggestions for the SWRCB are set forth in **bold** for ease of readability.

1. Background and Qualifications

The Law Firm has experience with water and agricultural issues across the State of California. The Law Firm is currently working with the Tanimura and Antle Library and Professor Ruben Mendoza at California State University at Monterey Bay on *The Diseños Project*. A soon to be published article explaining the *Diseños Project* is enclosed. Hopefully this project will give California a better understanding about how it developed and help it plan for the future.

The Law Firm spends a significant amount of time in any representation listening to and learning from well drillers, water purveyors and farmers including but not limited to their employees or the irrigators who makes the decision about how and when water is used on a crop or field. The women/men who make these decisions have more impact on the optimization of water than anybody else in the water system structure. The Law Firm is not alone in its opinion.

> The role human decisions play in irrigation system performance and water management should not be overlooked. In SV and TLB, growers and their irrigators decide when, where, and how much water to apply. The operator manages soil water and, by extension, deep percolation. While pressurized irrigation systems, sprinklers and microirrigation, can precisely control water flow and thus have a greater technical potential for field uniformity and delivery efficiency, using a high-efficiency technology (e.g., drip) will only increase irrigation performance if managed properly. It is the management of those systems that results in optimal or non-optimal performance. Likewise, performance of surface irrigation systems are significantly influenced by operators and can achieve reasonable efficiency levels, though their absolute technical potential is far less than pressurized systems. As a point of reference, Hanson (1995) reported that efficiencies among irrigation types were similar in practice across nearly 1000 irrigation systems monitored in California. Drip and microsprinkler systems did not show appreciably higher performance (*ibid*.). Observed irrigation efficiencies ranged between 70 and 85% for both microirrigation and furrow irrigation. It is worth noting that actual efficiencies may be below or above this range, and that changes in management practice may have improved to capture the technical advantage of pressurized systems in the 16 years since this study was published. At least one study suggests that variance in efficiency may not have increased despite the recent use of more sophisticated equipment. When irrigation performance was measured on nine drip irrigated celery fields in the Salinas Valley, performance was low. Water application rates ranged between 85% and 414% of ET, indicating under- and over-irrigation were common despite advanced capabilities (Breschini & Hartz 2002). Celery may not be representative of other cropping systems less sensitive to water stress; however, the results illustrate the potential for current irrigation system mismanagement even with advanced technology. Though the ability to apply the desired amount of water with each application is limited by the configuration of the irrigation system and hence uniformity and efficiency are somewhat predetermined, there are many practices growers can use to optimize water delivery systems (Dzurella et al. 2012).

Viers, J.H., Liptzin, D., Rosenstock, T.S., Jensen, V.B., Hollander, A.D., McNally, A., King, A.M., Kourakos, G., Lopez, E.M., De La Mora, N., Fryjoff-Hung, A., Dzurella, K.N., Canada, H.E., Laybourne, S., McKenney, C., Darby, J., Quinn, J.F. & Harter, T. (2012) Nitrogen Sources and Loading to Groundwater. Technical Report 2 in: *Addressing Nitrate in California's Drinking Water with a Focus on Tulare Lake Basin and Salinas Valley Groundwater. Report for the State*

Water Resources Control Board Report to the Legislature. Center for Watershed Sciences, University of California, Davis at 80 (emphases supplied).

The on the ground decision maker will put the water to reasonable and beneficial use if they are given the appropriate tools. The tools can be technically complex and but at the same time simple to use. The Law Firm over the years has worked with a number of engineers, economists and consultants and one of its first requirements is that these individuals understand what the decision maker at the lowest level on the water delivery process is doing and why. She/he usually has more knowledge than all of the Harvard, Stanford, UC Davis, CalPoly, UC Berkeley, Oxford, Fresno State, etc. graduates about how to optimize the water resources in any given area.

It may not be feasible, **but if each member of the Board were to spend a week in a different part of the State listening to the "on the ground" people and then the Board member could share this information with her/his fellow Board members, the Board's ability to deal with the drought would be materially improved.**

In 2002, the Law Firm in its comments (enclosed) on the Sax Report was one of a limited set of voices that advocated for a rational and comprehensive modification of the California water rights system based on reasonable use, erasing legal distinctions not based in verifiable science (such as treating ground and surface water separately), utilizing contemporary technology to strategically approach water management, greater emphasis on the Statements of Water Diversions, and market dynamics. The Sax Report raised important policy issues and the SWRCB choose to ignore them. The Law Firm was shocked with the responses from interests across the State to the Sax Report and the SWRCB's behavior. The Law Firm hopes the SWRCB does not ignore the issues raised by the drought if the rains come. **California water policy cannot be determined by the absence or presence of rain in a given year**.

2. State of eWRIMS

In the Law Firm's June 28, 2014 letter to the SWRCB (enclosed) it provided two notable examples of how the eWRIMS system has failed the public. It is not necessarily the system itself or staff that may be at fault, but prior polices and direction of the SWRCB that frustrated and prevented the timely, accurate, and comprehensive use of the system. The details of two such (unrelated) instances are detailed in our June 28, 2014 letter. For purposes of summary, the two instances reflected (1) apparent initial human error[1] that responded poorly to multiple attempts seeking correction and (2) SWRCB policy that allowed staff to reject Statements of Water Diversion (physically returned and/or threats to destroy the submitted documents) when staff believed such statements may impact existing filings, seemingly in complete disregard or ignorance of the priority system (i.e., statements based on a pre-1914 right "duplicated" reports submitted for permitted post-1914 rights of diversion).

[1] The statements were mislaid, misorganzied, or lost for a number of years, it appears.

The 1978 Dry Year Report strongly recommended that the SWRCB encourage and make it easier for pre-1914 filers so as to assist in better decision-making, not prevent the filing of Statements based on pre-1914 rights.

> The Division also believes that provisions should be included in law which accelerate the filing of statements of use by pre-1914 diverters and riparians. This data would have greatly assisted the work of the Dry Year Program.

Dry Year Report at 24 (emphasis added). **The Law Firm strongly agrees with the recommendation from 1978,** which goes to Queries 1, 5, and 7.

3. Use of Statements of Water Diversion

The Law Firm's 2002 letter at pages 5 and 6 recommended a general liberalization of the Statements of Water Diversion. The June 28, 2014 letter at page 4 followed up on those thoughts. The recent groundwater legislation appears to track part of what the Law Firm advocated in 2002 and again in 2014. SB 1168, SB 1319, and AB 1739. The SWRCB should continue to support law or regulation that requires all water users to file Statements or their equivalents. **All material use of water should ultimately be reported so that one can then compare uses, surpluses, and deficits, thereby encouraging conservation and the orderly transfer of water.** The days of using water in secret, hiding one's claim of right along with the actual use, must end. It remains important to have a definable water entitlement subject to drought impacts to support the stability of property ownership across California. That stability is undermined when the information about that right, its use, and comparison to others' rights and use remain hidden.

The 1978 Dry Year Report recommended public reports and analyses of the rights and water uses, which recommendations were washed away with the spring rains of 1978. Dry Year Report, at 26-29 (recommending a "water management section" be created that would, inter alia, collect and organize data and reports, use them to determine availability of water in critical areas, and then communicate it.) Queries 1, 5, 6, and 7. Recommendations of how to affect such goals using current tools are addressed below at part 5.

4. Confidentiality of Water Uses and Rights

The SWRCB, water agencies, and farming interests across the State have been advocates for confidentiality. See July 6, 2000 Order Quashing Subpoena, Application 30532. Dr. Reinelt's 2014 analysis retorts any theoretical or legal bases for maintaining confidentiality. February 26, 2014 Letter and submission by Dr. Peter Reinelt, Chair, Department of Economics, SUNY Fredonia. The Law Firm has discussed this issue extensively with farming interests across the state. Many of these interests have flatly stated that confidentiality is irrelevant and every farmer is always looking at what the other farmer is doing so he can improve his practices. One interest from the Napa Valley suggested that they are required to disclose all water use in the Napa and it has not hurt production or land values. **The practical reason for disclosing all of the water data is that farmers learn from each other.** Queries 1, 6 and 7.

5. Technology and Tools for Optimization

There are technical tools being developed and used across the world to help the individual farmer better manage water and its use. The Law Office 2002 letter explained some of the tools it had pursued at that time. See 2002 letter at 2 – 3. Since that time the Law Office has continued to pursue solutions to water management challenges, and is associated with two recent patents for water optimization (Patents: Systems and Methods for Optimized Water Allocation, United States Patent Sep 28 2010 US7805380, United States Patent Dec 25 2012 US8341090.

The SWRCB should require all water users who deliver water to third parties to do so without undermining or frustrating the use of current technology. For instance, if a water purveyor (such as an irrigation or water district) chooses to deliver water to the ultimate user (a farmer) in a way that can frustrate the use of new technology, the SWRCB should find that the purveyor (the district, not the farmer) is unreasonably using (or more specifically, unreasonably delivering) the water and take appropriate action. All tools to conserve and optimize water resources must be able to work together. Queries 1, 6 and 7.

6. Salinas Valley and Reasonable Use in Critical Area

The Dry Year Report mentioned the Salinas Valley (stretching from the mouth of the Salinas River in Monterey County to the interior of San Luis Obispo County), but did not perform any detailed analysis at that time. Dry Year Report at 12. It has been common knowledge for decades that a portion of the Salinas Valley in Monterey County near the ocean suffers from seawater intrusion. That pumping near the coast exacerbates the intrusion was well understood half a century (or more) ago. The seawater-intruded water has harmful effects on agriculture when used for irrigation, but more critically, it cannot be used as a drinking water source for the coastal communities such as the City of Salinas. Thus, several projects have been analyzed and built to address the over pumping and intrusion problems, including reservoirs, later modification of the reservoirs, and a water recycling plant to provide an alternate irrigation water source for the critical coastal area.

In addition to the physical projects studied and built, the local agency with the most responsibility for managing the seawater intruded area – formerly known as the Monterey County Flood Control District and presently the Monterey County Water Resources Agency – has implemented ordinances, regulations, and other management systems. Thus, under a local program, water extractors have been required to report their water use (i.e., pumping of water from a well) and certain farming practices for nearly two decades. The individual reports of water use are not public, but the aggregated water use is released in certain annual reports by the Monterey County Water Resources Agency. The 1995 (earliest) and 2012 (latest) ones are enclosed.

These summary reports reveal that water use for row crop in Monterey County has not gone down, even with all of the technological irrigation improvements over the last twenty years. See Ground Water Summary Report 2012. Water use for vineyards, in contrast, has gone down.

The overall flat trend of agricultural water use in the Salinas Valley suggests certain possibilities. It may be that as presently constructed, the "system" bulges or bottlenecks in a new place when regulatory pressure is applied to the targeted bulge or bottleneck. In other words, because regulatory pressure is so crisis-oriented rather than preventative, the symptoms respond to regulation, but the underlying problem does not improve. **To address that dynamic, universal and public reporting of water use is the necessary approach, so that regulatory actions can focus on trends rather than crises.** See Dry Year Report at 26 et seq (recommendations for predictive approaches).

Or it may be that the practical technological limit for efficiency improvements has already been achieved, and that the only option left to manage agricultural water use is to set hard limits on extraction amounts. (In others words, one gets a set amount one can use on many acres of a low water crop or on fewer acres of a high water crop.) The new groundwater legislation programs may reach that conclusion, at least for certain basins. Even if hard limits are the necessary long-term solution, technological advances remain a key component for optimizing water use under any regulatory system. **The SWRCB should require that the state of the art in technology be applied to water consumption and management issues in California.** Many water advisors (lawyers, engineers, consultants) suggest to water users that the best way to guarantee one's water source and right is to use as much water as one can. **Instead, the SWRCB should guarantee water and water rights to the water users who use the best water optimization practices based on the state of the art.** We recognize that this is a moving target but the failure to reasonably adopt current technology should be grounds for a finding by the SWRCB of unreasonable use. The Law Firm sees no difference between such an action by the SWRCB and Air Resources Agency findings that an emitter must install certain pollution preventing devices.

The above discussion goes to Queries 6 and 7.

7. Opportunity at Salton Sea for State's Drought Protection

The 1978 Dry Year Report and the Board's 2014 activities allocate substantial resources on managing the Sacramento and San Joaquin (Delta) situation, e.g., the curtailment proceedings earlier this year. These comments will not address the Delta per se, given the likelihood of constructive suggestions from many other interests and commentators with substantial Delta experience. These comments will instead address the other major water situation with critical public policy implications during this drought – the Salton Sea.

The Board addressed the Salton Sea to a degree in 2002 and 2003 when it approved the agricultural to urban transfer known as the Quantification Settlement Agreement or QSA. WRO 2012-13 (Revised) (SWRCB recognized it has a duty to reopen the Order if circumstances change)[2]. While the QSA and the Sea has been mired in litigation and other controversy these

[2] The relevant portion of the Order reads at pages 79-81:

> Because irrigation efficiency is not the only fact relevant to a determination of reasonableness, it would not be appropriate to find, as requested by IID, that the

past 12+ years, including whether the State shall, may, or must meet its restoration obligation and how, these comments will avoid all such "legal" controversies as much as possible.

While the 1978 Dry Year Report concentrated on the Sacramento and San Joaquin areas, it recognized in its recommendation section that the proposed data management and collection proposals were not limited to the Delta, but "to ensure full and equitable distribution of waters of the State so as to protect the public interest and the environment in accordance with water rights priorities." Dry Year Report at 26. The proposals included studying "specific trouble areas." Id. at 27. The Salton Sea is presently one such "trouble area" that has statewide impact on drought management. The Order approving the QSA recognized that the implementation of the transfer was a concern for the entire State, not just the specific parties to the QSA. "Implementation of the transfer as approved by this order will benefit not just the parties to the transfer, but the State as a whole." WRO 2002-13 (Revised) at 84. The QSA, including the Salton Sea, must therefore be analyzed from a statewide perspective, not parochially.

The water that presently flows to the Sea (1.0- to 1.2 MAF) could be substantially reduced if the Sea was managed (restored) to a smaller volume. Dr. Terry Fulp, Regional Director of the Bureau of Reclamation's Lower Colorado Region, informed the Imperial Irrigation District (IID) that the Bureau advocated a "smaller and sustainable [Salton] Sea" during his public presentation on September 16, 2014.

> 1:42:13 Dr. Terry Fulp – So all along here and in fact we spent a good hour with your environmental staff this morning to kick around some ideas about how we can really get on a positive again path, albeit first steps with regard to Salton Sea solution. And I'll use these terms, smaller and sustainable Sea is perhaps where we're headed. And energy development and all the other ideas that have been spearheaded by [IID] President Hanks and others are, I think, very viable and also valuable to now try to implement. That's the key. We've got to get some stuff implemented so we did kick around some ideas with your staff this morning. All that being said, of course, it's a complex problem again. As you know [IID Director] Matt [Dessert] and others, it's not an easy thing to fix. A recent report by the report by the Pacific Institute made it very clear about what the potential the costs are by not doing something – you know, not just the cost of doing something. And that's probably a valuable perspective as well. So I think

---

circumstances under which we anticipate it may be necessary to reassess IID's water use are limited to changes in IID's irrigation practices or technological advances in irrigation efficiency.

It bears emphasis that by making this finding we do not intend to bind the SWRCB in any future proceeding, particularly if circumstances change. To do so would be an abdication of the SWRCB's ongoing responsibility to prevent the unreasonable use of water. (See Wat. Code, § 275; see also *Tulare Dist. v. Lindsay-Strathmore Dist.* (1935) 3 Cal.2d 489, 567 [45 P.2d 972, 1007] ["What is a beneficial use at one time may, because of changed conditions, become a waste of water at a later time."].)

> certainly more and more folks are beginning to understand the complexities around the Salton Sea and certainly it's value environmentally, ecosystem wise as well as, frankly, for what our intents were when we took those lands out of public domain—a runoff repository. It has to be there. I mean we need it. So the key now is to figure out what those first steps are to implement some of these ideas to get on a path towards that smaller and sustainable Sea. So I guess in summary, it's going to be another one of those very complex and difficult tough solutions and we're very hopeful, of course, that the State can find their way to meet their obligations as well.

September 16, 2014 Imperial Irrigation District Board of Directors meeting at approx. 1:42:13 http://imperialid.granicus.com/MediaPlayer.php?view_id=3&clip_id=67 (emphases supplied). From the Federal perspective, the key to managing the droughts affecting the Colorado River is to keep Lakes Mead and Powell above the critical levels. A "smaller and sustainable Sea" materially assists that goal by freeing up water that can be kept in the Lakes for the benefit of the many Colorado River (Upper and Lower Basin) states, including California. **In simplistic terms: a restored/managed Salton Sea that needs less water to remain viable allows more water to be kept in Lakes Mead and/or Powell.**

California is a major beneficiary of keeping the Lake levels up. As the Board understands, much of the Southern California water supply (be it through the Metropolitan Water District or the San Diego County Water Authority) (MWD and SDCWA) comes from the Colorado River, so any elevation building that aids the reliability of Southern California supplies from the Colorado River reduces the pressure on Northern California waters and makes the critical remaining supply more available for other uses. In this drought era, its a complex zero sum game. Unfortunately, much time, effort, and money have been spent in endless litigation, studies, and posturing by the many water entities associated with the QSA on local power and fiscal struggles, e.g., the QSA litigation and the several lawsuits among MWD, SDCWA, and their respective allies. Those lawsuits and use of political capital and financial resources by the squabbling water parties do not assist the State in optimizing its overall water resources – a key premise of the transfer. "If the proposed transfer is not implemented because the cost of mitigation is too high, the consequences to the State's water supply and to the San Francisco Bay/Sacramento San Joaquin River Delta (Bay-Delta) could be severe." WRO 2012-013 (Revised) at 44.

Proposals for a smaller and sustainable Sea[3] were offered multiple times over the past decade and more, but one or another local agency (i.e., not the State) chose to thwart such efforts for its own presumably parochial reasons. For example, the Metropolitan Water District was given an opportunity to use its considerable political and economic might to support discussions about a

[3] A group of farming interests, using the resoucres of world-class Dutch engineering, indepedently developed a flexible and low cost (according to the Salton Sea EIR prepared by the State) approach to restoration. The Dutch firm obtained a patent for the restoration plan. Method of Restoration of Highly Saline Lake, United States Patent November 16, 2010 US 7,832,959 B1, enclosed.

rational long-term Sea solution – the low-cost Dutch designed one -- that could make more water available to the State, but MWD chose otherwise. See enclosed February 8, 2005 letter (copy to Jeffrey Kightlinger, MWD's General Counsel at the time, now its General Manager). The local agencies – including MWD -- are now reaping the effects of their prior shortsighted decisions to treat the Salton Sea as a pawn, such as dwindling storage outlooks. The local government agencies have to date preferred to posture and squabble instead of immediately and constructively addressing the Sea and improving the State's (and their own) water picture. Had the Sea restoration been resolved ten years ago, there would today be hundred of thousands of additional acre-feet available for Lake elevation building and thereby a reduction of pressure on the Delta during the drought. "Local" water battles waged by intransigent government agencies and parochial interests can cause significant statewide harm, especially during a drought. In addition, the fights over water issues among government agencies of the State of California are costs that neither ratepayers nor the taxpayers should be forced to bear.

The failure of the State to timely solve the Salton Sea problem has allowed the various local governmental entities to ignore available solutions and instead pander to local political pressure, which does not solve the problem. With respect to the serious groundwater problems, the Legislature in its recently enacted groundwater laws now require the local governments to develop solutions to their groundwater problems within a fixed period of time or the SWRCB will impose a solution. The SWRCB can adopt a similar approach to problem areas of statewide impact such as the Salton Sea. **It should give the local governments a specific time frame to resolve the problem, or the SWRCB will step in and do it for them for the good of the State.** The opportunity to curb waste and put to reasonable use additional hundreds of thousands of acre feet of water in this time of drought is too important to California's wellbeing to allow local government agencies and parochial interests to frustrate it.

The Dry Year Report supports a State-led foray into a problem area that may have substantial (in this case, beneficial) impacts to the State. State-led coordination and including "other" areas of State interest in the Board's management were both recommended in the Dry Year Report. Dry Year Report at 27 (point 7) and 28 (point 6). **It is time to pursue the obvious opportunities in the Southeastern corner of the State for the overall benefit to the State and region.** Query 7.

Closing

The 1978 Dry Year Report's recommendations were practical, long-term, and fundamentally straightforward: acquire the data, analyze the data, and plan accordingly (and above all, publically). Over a century ago the then-State Engineer predicted that untimely data collection and analysis would lead to unwelcome results, politically and practically:

> When, as is sure to come, the State is forced to take control of her streams for irrigation, arterial drainage, and reclamation regulation, it will be found that the time has passed in which alone the data might have been acquired necessary for intelligent action, both in an engineering and political way.

William Hammond Hall, Report of the State Engineer to his Excellency R. W. Waterman, Governor of California, for the Year and a Half ending December 31, 1888, JCSA, 28th sess. (Sacramento, 1889), Assembly, 1:9-10, 8. The current drought is forcing the State to finally acquire the data and intelligently manage its water resources.

Thank you for allowing the Law Firm to provide comments on an important public matter with long-term strategic implications to the future of the State.

Sincerely,

Patrick J. Maloney

Patrick J. Maloney

Enclosures:

Mendoza, Ruben G, Ph.D, RPA, *THE DISEÑOS PROJECT, A Geospatial Visualization of the Environmental History of California, 1769-1862*, Boletin Vol. 30 November 1, 2014 (Journal of the California Mission Studies Association)

Water Conservation Practices – Monterey County Water Resources Agency:
1995 Ground Water Extraction Data and Agricultural Water Conservation Practices
Ground Water Summary Report 2012 – Monterey County Water Resources Agency

Method of Restoration of Highly Saline Lake, United States Patent November 16, 2010 US 7,832,959 B1

Linus Masouredis (MWD) February 8, 2005 letter to Patrick J. Maloney

Thomas Virsik June 28, 2014 letter to SWRCB with attachments:
April 2, 2002 Summary of Position on Sax Report
November 12, 2012 letter re Imperial Valley Statements
September 28, 2011 email re Maloney documents
July 6, 2000 Order Quashing Subpoena, Application 30532
February 26, 2014 Letter and submission by Dr. Peter Reinelt, Chair, Department of Economics, SUNY Fredonia

THE DISEÑOS PROJECT
A Geospatial Visualization of the Environmental History of California, 1769–1892

Rubén G. Mendoza, PhD, RPA, CSU Monterey Bay

The Diseños Project represents the culmination of some 40 years of research by noted California historical geographer and Professor Dr. David Hornbeck, Jr., Professor Emeritus of the California State University, Northridge. In an effort to facilitate the transfer of Dr. Hornbeck's vast collections to their new home in the Tanimura & Antle Family Memorial Library of the California State University, Monterey Bay, I was recruited by land and water rights attorney Patrick J. Maloney to see through the transfer and dissemination of these invaluable collections. To date, this effort has been underwritten in large part by the law firm of Maloney, and has produced thousands of scanned documents from the collections of Hornbeck and other archival collections throughout the country. Law clerk Miriam Infinger and Information Technologist Dennis Coady have in turn worked to identify, categorize, and digitize those documents collected as of this writing.

In an effort to raise awareness of the significance of the Hornbeck Collection, Ms. Jennifer Lucido and I recently submitted the first of a series of grant proposals intended to generate funding needed to facilitate the dissemination and public education dimensions of the project now underway. As a first step towards these initiatives, we applied for the 2014 National Endowment for the Humanities Digital Humanities Start-up Grants. Our initial foray constitutes an effort to address the growing water crisis in California by way of generating an Internet-based geospatial collection and *Google Earth* mapping of the Monterey Bay.

The proposed project seeks to deploy a digital humanities approach to sustainability. Historic maps, documents, and other resources of the Spanish, Mexican, and early American periods provide critical environmental data, and thereby, environmental histories of resource abundance and scarcity for the affected regions upon which millions of Americans depend. Hornbeck's pioneering historical geography and geospatial studies have produced a formidable archive of primary sources and Mexican land grant maps or *diseños* and constitute the centerpiece of this project. The proposed

Figure 1. Map of Public Surveys in California to Accompany Report of Surveyor General, 1859. Source: National Archives. Courtesy of Diseños Project, Patrick Maloney, esq., Miriam Infinger, and Rubén G. Mendoza, 2014.

grant seeks to assemble a team of geospatial technicians, anthropologists, social historians, historical geographers, and environmental scientists for the expressed purpose of formulating a digital humanities approach to addressing California's current environmental crisis and the broader question of sustainability.

By remapping the changing landscapes of early California, both legislators and environmental scientists will be able to make informed decisions for future planning and conservation. Given that folk cartographies and plat maps have been given short shrift in recent efforts to address climate change and its consequences, the proposed project will develop a *web GIS* and geospatial visualization of the Monterey Bay that introduces primary sources as a formidable resource for humanistic and scientific inquiry. Once the Monterey Bay portion of the online archive has been completed and deployed, the prototype will serve as a demonstration project for soliciting further public, private, and corporate funding needed to sustain and expand the online resource to encompass heritage resources from throughout the state of California.

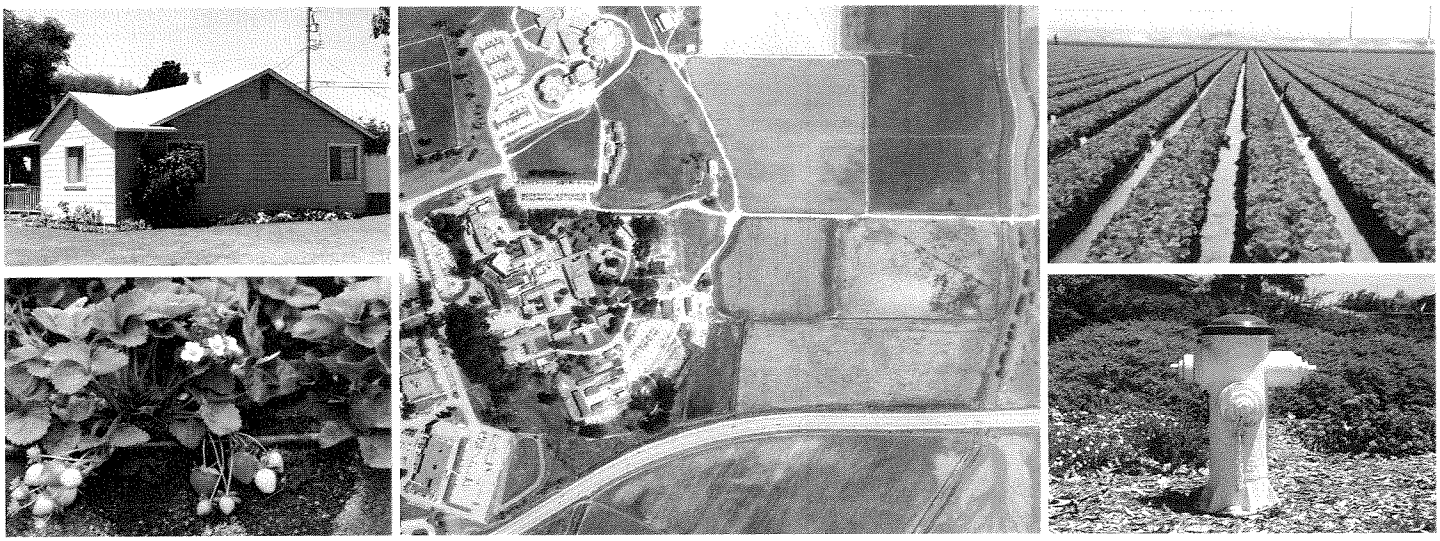

Summary Report:

1995 Ground Water Extraction Data and Agricultural Water Conservation Practices

Published by the
Monterey County Water Resources Agency

August 1996

This report published by the Monterey County Water Resources Agency

Board of Supervisors

Simon Salinas	District #1
Judy Pennycook	District #2
Tom Perkins	District #3
Edith Johnsen, Chair	District #4
Sam Karas	District #5

Board of Directors

Jan Collins	District #1
Michael Fletcher, Jr.	District #2
Arvid Myhre, Chair	District #3
Paul Martin	District #4
Robert Hunsicker	District #5
Robert Scattini	Agricultural Advisory Committee
Lawrence Porter	Farm Bureau
Stephen Jensen	Grower-Shipper Vegetable Association
Roy Morris	Mayor Select Committee

Michael D. Armstrong, General Manager
Leo Laska, Deputy General Manager

Matthew Zidar, Water Resources Management Division Manager

Prepared by:
Margo Nottenkamper, Water Conservation Manager
Germán Criollo, Water Conservation Technician
Danyal Kasapligil, Irrigation Specialist
Kimberley Wall, Water Conservation Technician
Manuel Saavedra, Water Conservation Technician

If you would like more information regarding the Monterey County Water Resources Agency Water Conservation Programs, or the Ground Water Extraction Reporting Program, please contact the Conservation staff at (408) 755-4860.

Funding for this work was provided from Zones 2 and 2A within the Salinas Valley, with additional support from Fund 201.

Table of Contents

Overview of the Extraction Reporting Program 1
- Explanation of Reporting Methods 1
- Disclaimer Regarding Quality of Data 1
- Notes Regarding Report Format 1

Ground Water Extraction Data Summary 2
- Summary of Methods Used for Extraction Reporting 2
- Total Extraction Data by Subarea and Type of Use 3
- Urban Extraction Data by City or Area 3

Agricultural Ground Water Extraction Summary 4
- Average Net Physical Acres Served per Extraction Facility 4
- Summary of Reported Unit Agricultural Water Pumped 4

Summary of Irrigation Methods 5
Agricultural Water Conservation Practices 6
Evaluation of MCWRA Programs 6
Capital Investment in Agricultural Water Conservation Practices 7
CIMIS Data Summary 8

List of Tables

Table 1 Total extraction data by reporting method 2
Table 2 Total extraction data by subarea and type of use 3
Table 3 Urban extraction data by city or area 3
Table 4 Average net physical acres served per extraction facility by subarea 4
Table 5 Reported unit agricultural water pumped by subarea 4
Table 6 1993 distribution of irrigation methods by crop type 5
Table 7 1996 distribution of irrigation methods by crop type 5
Table 8 Agricultural water conservation practices implemented from 1991 through 1996 . 6
Table 9 Capital investment in agricultural water conservation practices since 1991 7
Table 10 Description of Salinas Valley CIMIS stations 8

List of Figures

Figure 1 Salinas Valley Subareas 2
Figure 2 Percentage by volume of methods used for extraction reporting 2
Figure 3 Percentage of total extractions by subarea 3
Figure 4 Unit agricultural water pumped by subarea 4
Figure 5 Average annual ET_o for rain years 1993 through 1996 8

Overview of the Extraction Reporting Program

In February, 1993, the Monterey County Board of Supervisors adopted Ordinance No. 3663 which required water suppliers within Zones 2, 2A and 2B to report water use information for ground water extraction facilities and service connections. Ordinance No. 3717, which replaced Ordinance No. 3663, was adopted in October, 1993; it modified certain other requirements in the old ordinance but kept the ground water extraction reporting requirements in place for ground water extraction facilities with a discharge pipe having an inside diameter of at least 3 inches.

The Monterey County Water Resources Agency (MCWRA) has collected ground water extraction data from well operators for water reporting years beginning November 1 and ending October 31, starting with the 1992-1993 water reporting year. The information received from the over 400 well operators in the above-referenced zones of the Salinas Valley is entered into the Ground water Extraction Management System (GEMS), a computer database maintained by the MCWRA. The intent of the ground water extraction reporting program is to provide for the accurate documentation and annual measurement of the ground water extracted from Zones 2, 2A and 2B of the Salinas Valley Ground Water Basin each year.

The MCWRA also requires the annual submittal of Agricultural Water Conservation Plans, which outline the water conservation practices that are adopted each year and planned for the next year by growers in the Salinas Valley.

The purpose of this report is to summarize the data obtained from the ground water extraction reporting program for the period of November 1, 1994, through October 31, 1995. The agricultural water conservation practices implemented by Salinas Valley farmers are summarized, and reference evapotranspiration data from the California Irrigation Management Information System (CIMIS) are presented. With this information, this report is intended to present a picture of current water pumping within the Salinas Valley, including agricultural water conservation improvements which are being implemented to reduce total water applied.

Explanation of Reporting Methods

The ground water extraction reporting program enables water users to report water pumpage by three different measuring methods, utilizing calculations based on flowmeter, electrical meter, or hour meter data. The MCWRA requires pump efficiency testing and calibration of meters in order to ensure the accuracy of the data reported. The summary of water pumpage presented in this report is compiled from data generated from all three reporting methods.

Disclaimer Regarding Quality of Data

While the MCWRA has made every effort to ensure the accuracy of the data presented in this report, it should be acknowledged that the data is submitted by the individual reporting parties and is not verified by the MCWRA. In addition, the accuracy of the reporting methods may not be 100 percent reliable at all times.

The MCWRA did not receive ground water extraction reports from approximately two percent of the wells in the Salinas Valley for the 1994-1995 water reporting year.

Notes Regarding Report Format

Ground water extraction data is presented in this report by measurement in acre-feet. One acre-foot is equal to 325,851 gallons.

Ground Water Extraction Data Summary

The MCWRA has designated subareas of the Salinas Valley Ground Water Basin whose boundaries are drawn where discernible changes occur in the hydrogeologic conditions. These boundaries are shown in Figure 1.

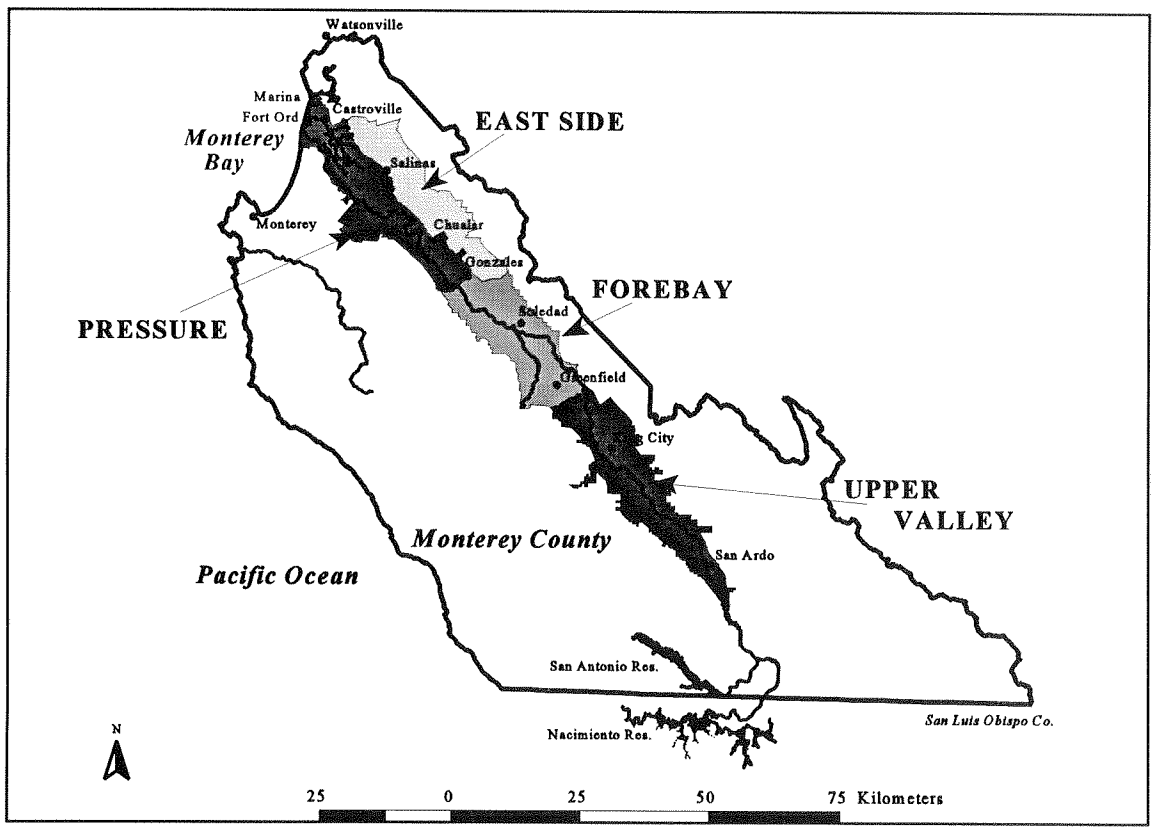

Figure 1. Salinas Valley Subareas

Summary of Methods Used for Extraction Reporting

The distribution of methods used for extraction reporting for the period of November 1, 1994, to October 31, 1995, is shown in Table 1; a percentage distribution by volume is shown in Figure 2.

Table 1. Total extraction data by reporting method

REPORTING METHOD	ACRE-FEET PER REPORTING METHOD	WELLS PER REPORTING METHOD
FLOWMETER	294,635	1,179
ELECTRICAL METER	208,868	661
HOUR METER	1,009	11
TOTAL	**504,512**	**1,851**

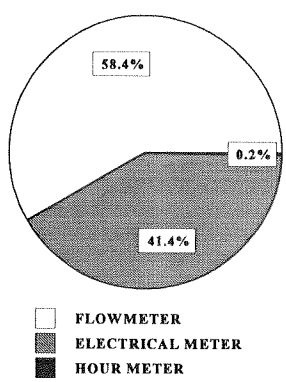

Figure 2. Percentage by volume of methods used for extraction reporting

Ground Water Extraction Data Summary

Total Extraction Data by Subarea and Type of Use

The total ground water extractions from Zones 2, 2A and 2B for the period of November 1, 1994, through October 31, 1995, are summarized by subarea and (1) type of use (agricultural and urban) in Table 2, and (2) percentage in Figure 3.

Table 2. Total extraction data by subarea and type of use

SUBAREA	AG PUMPING (ACRE-FEET)	URBAN PUMPING (ACRE-FEET)	TOTAL (ACRE-FEET)
PRESSURE	105,741	30,738	136,479
EAST SIDE	84,589	2,907	87,496
FOREBAY	133,226	3,994	137,220
UPPER VALLEY	139,072	4,245	143,317
TOTAL	**462,628**	**41,884**	**504,512**

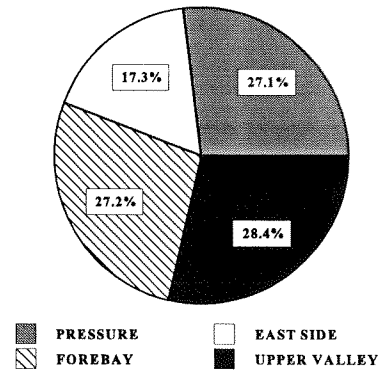

Figure 3. Percentage of total extractions by subarea

Urban Extraction Data by City or Area

The total ground water extractions attributed to urban (residential, commercial, industrial, and governmental) pumping for the period of November 1, 1994, through October 31, 1995, are summarized by city or area in Table 3.

Table 3. Urban extraction data by city or area

CITY OR AREA	URBAN PUMPING (ACRE-FEET)	PERCENTAGE OF TOTAL
CASTROVILLE	823	2.0%
CHUALAR	118	0.3%
FORT ORD[1]	2,802	6.7%
GONZALES	1,174	2.8%
GREENFIELD	1,349	3.2%
KING CITY	3,981	9.5%
MARINA COAST WATER DISTRICT	2,018	4.8%
SALINAS	20,667	49.3%
SAN ARDO	123	0.3%
SAN LUCAS	53	0.1%
SOLEDAD	2,562	6.1%
OTHER UNINCORPORATED AREAS	6,214	14.9%
TOTAL	**41,884**	**100.0%**

[1] The data reflect extractions that occurred subsequent to the closing of the military base and prior to the opening of California State University Monterey Bay.

Agricultural Ground Water Extraction Summary

Average Net Physical Acres Served per Extraction Facility

Table 4 presents the average number of net physical farming acres served per ground water well used for agricultural irrigation purposes in 1995.

Table 4. Average net physical acres served per extraction facility by subarea

SUBAREA	AVERAGE ACRES PER WELL
PRESSURE	92
EAST SIDE	102
FOREBAY	120
UPPER VALLEY	91
AVERAGE	**101**

Summary of Reported Unit Agricultural Water Pumped

Table 5 and Figure 4 present the average acre-feet / acre (unit water pumped) by subarea, calculated using the reported acreage and agricultural water pumped for the period of November 1, 1994, through October 31, 1995. The data used for Table 5 and Figure 4 represent a subset of the totals shown in Table 2, since not all agricultural extraction data were submitted with acreage information.

Table 5. Reported unit agricultural water pumped by subarea

SUBAREA	UNIT WATER PUMPED (ACRE-FEET / ACRE)
PRESSURE	2.25
EAST SIDE	2.20
FOREBAY	2.66
UPPER VALLEY	3.44
OVERALL AVE.	**2.63**

Please note that during the 1994-1995 water reporting year, the 1995 floods affected the number of acres in production and the amount of water needed for irrigation. Even during a normal rain year, pumping rates will vary by crop type and location.

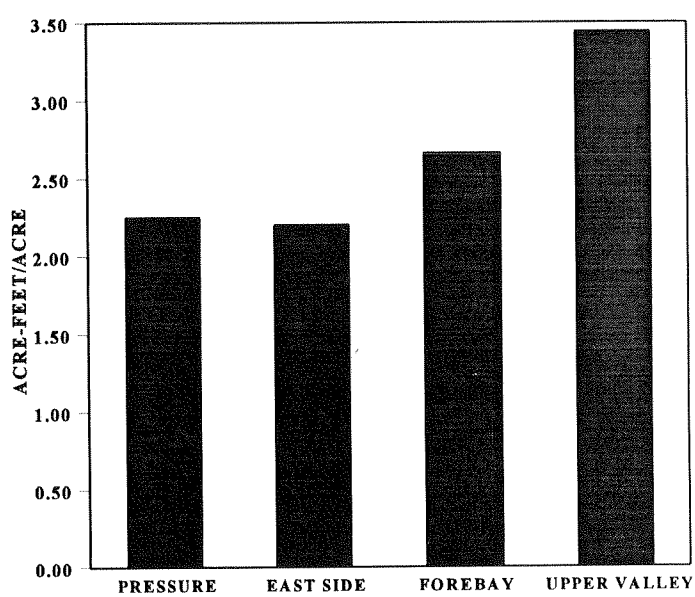

Figure 4. Reported unit agricultural water pumped by subarea.

Summary of Irrigation Methods

The Agricultural Water Conservation Plans include information about how many acres are irrigated with each type of irrigation method, by crop category. This information shows the changing trends in irrigation methods in the Salinas Valley. Tables 6 and 7 show the distribution of irrigation methods by crop type for 1993 and 1996, respectively.

This information shows a trend of decreased acreage in combined sprinkler & furrow and solid set sprinkler irrigation and increased acreage in drip irrigation, in both vegetable crops and vineyards, from 1993 to 1996.

Table 6. 1993 distribution of irrigation methods by crop type

1993	FURROW (ACRES)	SPRINKLER & FURROW (ACRES)	HAND MOVE SPRINKLERS (ACRES)	SOLID SET SPRINKLERS (ACRES)	LINEAR MOVE (ACRES)	DRIP (ACRES)	OTHER[2] (ACRES)	TOTAL (ACRES)
VEGETABLES	2,349	84,060	30,764	6,607	3,827	3,682	0	131,289
FIELD CROPS	575	2,173	2,236	90	50	48	0	5,172
BERRIES	1	0	0	0	0	4,158	0	4,159
GRAPES	261	0	0	13,347	0	15,976	0	29,584
TREE CROPS	0	0	122	251	0	1,216	10	1,599
FORAGE	41	202	1,327	0	48	0	189	1,807
TOTAL	**3,227**	**86,435**	**34,449**	**20,295**	**3,925**	**25,080**	**199**	**173,610**

Table 7. 1996 distribution of irrigation methods by crop type

1996	FURROW (ACRES)	SPRINKLER & FURROW (ACRES)	HAND MOVE SPRINKLERS (ACRES)	SOLID SET SPRINKLERS (ACRES)	LINEAR MOVE (ACRES)	DRIP (ACRES)	OTHER[2] (ACRES)	TOTAL (ACRES)
VEGETABLES	4,209	77,925	33,160	6,434	4,093	6,546	0	132,367
FIELD CROPS	529	740	1,358	310	39	422	0	3,398
BERRIES	0	0	0	0	0	4,374	0	4,374
GRAPES	0	0	0	8,155	0	21,240	0	29,395
TREE CROPS	0	0	12	131	0	1,195	0	1,338
FORAGE	186	690	249	20	0	0	1,141	2,286
TOTAL	**4,924**	**79,355**	**34,779**	**15,050**	**4,132**	**33,777**	**1,141**	**173,158**

[2] "Other" may include different combinations of irrigation systems or areas that were not irrigated.

Agricultural Water Conservation Practices

For the past six years, Salinas Valley growers have submitted water conservation plans to the MCWRA. Table 8 shows the number of acres, by year, on which selected practices have been implemented.

Table 8. Agricultural water conservation practices implemented from 1991 through 1996

WATER CONSERVATION PRACTICES	1991 ACRES	1992 ACRES	1993 ACRES	1994 ACRES	1995 ACRES	1996 ACRES
12 MONTHS SET ASIDE	4,705	4,810	6,586	6,096	5,064	3,123
SUMMER FALLOW/OTHER FALLOW	1,480	6,546	5,953	4,081	6,486	6,208
FLOWMETERS	31,702	26,404	39,206	127,971	122,054	126,031
TIME CLOCK/PRESSURE SWITCH	131,237	131,237	142,162	134,985	121,645	137,297
SOIL MOISTURE SENSORS	39,549	39,549	51,348	43,883	43,188	51,428
PRE-IRRIGATION REDUCTION	92,865	112,290	117,899	108,454	104,937	99,429
REDUCED SPRINKLER SPACING	64,613	72,226	81,736	74,409	75,451	78,925
SPRINKLER IMPROVEMENTS	70,035	97,233	104,160	107,626	102,053	116,809
OFF-WIND IRRIGATION	100,274	109,050	115,984	101,765	94,810	113,381
LEAKAGE REDUCTION	96,672	109,589	117,455	112,135	110,973	119,727
MICRO IRRIGATION SYSTEM	18,120	22,952	24,408	25,506	29,307	37,991
SURGE FLOW IRRIGATION	9,334	18,230	22,588	37,866	15,202	19,772
TAILWATER RETURN SYSTEM	20,357	25,034	21,020	20,994	15,101	22,707
LAND LEVELING/GRADING	55,186	60,563	59,413	58,963	57,749	64,164
TOTAL NET FARMING ACRES[3]	**174,892**	**178,251**	**173,610**	**179,313**	**161,574**	**173,158**

Evaluation of MCWRA Programs

The 1996 Agricultural Water Conservation Plans requested feedback regarding use and quality of the MCWRA's CIMIS and Mobile Lab Programs.

CIMIS Program

The California Irrigation Management Information System (CIMIS) is a network of weather stations which is used to estimate reference evapotranspiration. The MCWRA cooperates with the California Department of Water Resources in this effort, by expanding the program to cover the Salinas Valley. Additional information about the CIMIS program is provided on page 8. Of the 235 growers who submitted Agricultural Water Conservation Plans, 54 (23%) stated they had used the MCWRA's CIMIS Program, and 102 (43%) stated they would like more information.

Mobile Lab Program

The MCWRA operates a Mobile Lab program to provide on-farm technical assistance. Through this voluntary program, MCWRA staff evaluate irrigation systems and provide recommendations for improvements to distribution uniformity and overall efficiency of the system, as well as suggestions for irrigation planning. Of the 235 growers who submitted Agricultural Water Conservation Plans, 45 (19%) stated they had used the Mobile Lab Program, and 87 (37%) indicated they would like more information.

[3] Since different practices may be applied to the same acreage, the acreage cannot be totaled.

Capital Investment in Agricultural Water Conservation Practices

As presented in Table 8, the Agricultural Water Conservation Plans include information regarding how water conservation practices have been applied to farming operations in the Salinas Valley (by acre). These practices range from significant capital investments to recurring operational considerations. The implementation of these water conservation practices represents a significant financial investment by the agricultural community in long-term conservation measures. Table 9 estimates the investment in agricultural water conservation practices implemented since 1991.

Table 9. Capital investment in agricultural water conservation practices since 1991

CAPITAL IMPROVEMENTS	AVERAGE COST / ACRE ($/ACRE)[4]	CAPITAL INVESTMENT ($)
FLOWMETERS	40	3,773,160
SOIL MOISTURE SENSORS	10	118,790
TIME CLOCK/PRESSURE SWITCH	2	12,120
MICRO IRRIGATION SYSTEM	1,200	23,845,200
TAILWATER RETURN SYSTEM	200	470,000
SUBTOTAL	-	**28,219,270**
ON-GOING PRACTICES		
12 MONTHS SET ASIDE	700	21,268,800
SUMMER FALLOW/OTHER FALLOW	300	9,226,200
REDUCED SPRINKLER SPACING	75	33,552,000
OFF-WIND IRRIGATION	25	15,881,600
LEAKAGE REDUCTION	10	6,665,510
LAND LEVELING/GRADING	70	24,922,660
SUBTOTAL	-	**111,516,770**
CAPITAL IMPROVEMENTS / ON-GOING PRACTICES		
SPRINKLER IMPROVEMENTS	15	8,968,740
SURGE FLOW IRRIGATION	5	614,960
SUBTOTAL	-	**9,583,700**
TOTAL		**149,319,740**

The assumption of "1 well per 100 acres" was made for FLOWMETERS, SOIL MOISTURE SENSORS, and TIME CLOCK/PRESSURE SWITCH in the calculation of Average Cost / Acre.

Capital investment is calculated as follows:

Capital Improvements
Capital Investment = (1996 acres - 1991 acres) x Average Cost / Acre

On-Going Practices and Capital Improvements / On-Going Practices
Capital Investment = (sum of 1991 through 1996 acres) x Average Cost / Acre

[4] These estimates were developed with the consensus of the Monterey County Water Resources Agency Agricultural Water Conservation Committee (July 1996).

CIMIS Data Summary

The California Irrigation Management Information System (CIMIS) is a network of automated weather stations located throughout California. In the Salinas Valley, CIMIS is a cooperative program of the California Department of Water Resources (DWR) and the MCWRA. The primary function of CIMIS is to provide information to improve water management through efficient irrigation management practices. Weather data including solar radiation, air temperature, relative humidity, wind speed, wind direction, soil temperature and rainfall are collected from each station in the network and transferred to a central computer in Sacramento. After being analyzed for accuracy, the data are used to estimate reference evapotranspiration (ET_o). ET_o is a standard measure of the evaporative power of the atmosphere. ET_o represents the theoretical water use of a four to seven inch tall cool season grass that is not water stressed. ET_o must be factored with a "crop coefficient" (K_c) to estimate crop water use.

Two original DWR CIMIS stations near Salinas and Castroville have been in operation since the 1980's. In 1993, in cooperation with DWR, the MCWRA expanded the coverage of the CIMIS system in the Salinas Valley to provide improved data coverage for the varied micro-climatic regions in the valley. There are presently six CIMIS stations located in the Salinas Valley. The data from these stations provides insight about the relative water demands throughout the valley. In addition to normal and unusual monthly variations, these three years of data reveal several distinct climatic regions and zones of transition between them that are closer to the coast than previously believed.

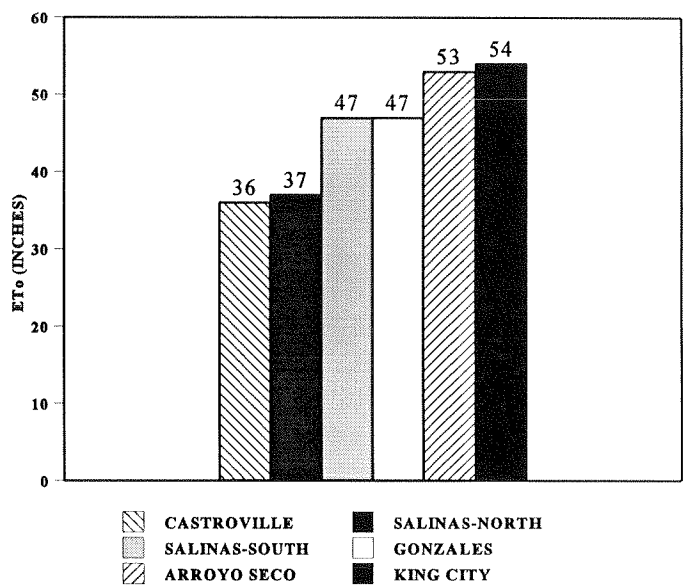

Figure 5. Average annual ET_o for rain years 1993 through 1996

Note: Rain year is from July 1 to June 30

Weather data throughout California are available to the public in hourly, daily, weekly and monthly formats via computer modem. Additionally, the MCWRA provides a toll-free telephone recording (1-800-4-U-CIMIS) of the ET_o and rainfall data for the six Salinas Valley stations. This "real time" data from CIMIS provides growers with the means to more precisely calculate irrigation needs.

The largest change in ET_o occurs just south of the city of Salinas, where the summer fog frequently clears early in the day, resulting in higher evaporative conditions than only a few miles further north.

Table 10. Description of Salinas Valley CIMIS stations

STATION NUMBER	STATION NAME	DISTANCE FROM COAST (MILES)
19	CASTROVILLE	1
116	SALINAS - NORTH	7
89	SALINAS - SOUTH	17
115	GONZALES	24
114	ARROYO SECO	40
113	KING CITY - OASIS RD	60

Monterey County Water Resources Agency
893 Blanco Circle
Salinas, CA 93901-4455
Mailing address: P. O. Box 930, Salinas, CA 93902-0930
(408) 755-4860 • Fax (408) 424-7935

Ground Water Summary Report 2012

Monterey County Water Resources Agency

October 2013

Table of Contents

Overview of the Ground Water Reporting Program **1**
History of the Ground Water Reporting Program 1
2012 Ground Water Summary Report 1
Reporting Methods 1
Disclaimer 1
Reporting Format 1

Ground Water Extraction Data Summary **2**
Summary of Methods Used for Extraction Reporting 3
Total Extraction Data by Hydrologic Subarea and Type of Use 3
Urban Extraction Data by City or Area 3

Agricultural Water Conservation Plans **4**

Water and Land Use Forms **6**
Agricultural Water Pumped 6

Urban Water Conservation Plans **10**

List of Tables

Table 1. Total extraction data by reporting method 3
Table 2. Total extraction data by hydrologic subarea and type of use 3
Table 3. Urban extraction data by city or area 3
Table 4. 1993 – net acre distribution of irrigation methods by crop type (based on 94% companies reported) 4
Table 5. 2011 – net acre distribution of irrigation methods by crop type (based on 94% companies reported) 4
Table 6. 2012 – net acre distribution of irrigation methods by crop type (based on 92% companies reported) 4
Table 7. 2013 – net acre distribution of irrigation methods by crop type (based on 94% companies reported) 4
Table 8. Agricultural Best Management Practices reported to be adopted from 2006 through 2013 6
Table 9. Urban Best Management Practices reported to be adopted from 2009 through 2013 10

List of Figures

Figure 1. Agency Zones and hydrologic subareas of the Salinas Valley Ground Water Basin 2
Figure 2. Percentage distribution by volume of methods used for extraction reporting 3
Figure 3. Percentage of total extractions by hydrologic subarea 3
Figure 4. Distribution of urban extraction by city or area 3
Figure 5. Types of irrigation methods used in the Salinas Valley based on companies reported 5
Figure 6. Top ten Best Management Practices forecasted for 2013 based on reported net acres 6
Figure 7. 2012 reported acre-feet by crop type & hydrologic subarea 7
Figure 8. 2012 reported net acres by crop type & hydrologic subarea 8
Figure 9. 2012 reported acre-feet/acre by crop type & hydrologic subarea 9

Overview of the Ground Water Reporting Program

History of the Ground Water Reporting Program

In February 1993, the Monterey County Board of Supervisors adopted Ordinance No. 3663 that required water suppliers within Zones 2, 2A, and 2B to report water-use information for ground water extraction facilities (wells) and service connections to the Monterey County Water Resources Agency (Agency). Monterey County Ordinance No. 3717, which replaced Ordinance No. 3663 and was adopted in October 1993, modified certain other requirements in the previous ordinance while keeping the ground water extraction reporting requirements in place for wells with a discharge pipe having an inside diameter of at least three inches.

The Agency has collected ground water extraction data from well operators, for the period beginning November 1 and ending October 31, starting with the 1992-1993 reporting year. Information received from the 300-plus well operators in the above-referenced zones of the Salinas Valley is compiled by the Ground Water Extraction Management System (GEMS) portion of the Water Resources Agency Information Management System (WRAIMS), a relational database maintained by the Agency. The intent of the ground water reporting program is to provide documentation of the reported amount of ground water that is extracted from Zones 2, 2A, and 2B of the Salinas Valley Ground Water Basin each year.

Since 1991, the Agency has required the annual submittal of Agricultural Water Conservation Plans (Ordinance 3851), which outline the best management practices that are adopted each year by growers in the Salinas Valley. In 1996, an ordinance was passed that requires the filing of Urban Water Conservation Plans (Ordinance 3886). Developed as the urban counterpart of the agricultural water conservation plans, this program provides an overview of the best management practices being implemented by urban water purveyors as conservation measures.

2012 Ground Water Summary Report

The purpose of this report is to summarize the data submitted to the Agency by well operators in February 2013 from the following annual reports:

- Ground Water Extraction Reports (agricultural and urban)
- Water Conservation Plans (agricultural and urban)
- Water and Land Use Forms (agricultural)

The agricultural data from the ground water extraction program covers the reporting year of November 1, 2011, through October 31, 2012; the urban data covers calendar year 2012. The agricultural and urban water conservation plans adopted for 2013 are also summarized. This report is intended to present a synopsis of current water extraction within the Salinas Valley, including agricultural and urban water conservation improvements that are being implemented to reduce the total amount of water pumped. It is not the purpose of this report to thoroughly analyze the factors that contribute to increases or decreases in pumping.

Reporting Methods

The Ground Water Conservation and Extraction Program provides well operators with a choice of three different reporting methods for each of their wells: Water Flowmeter, Electrical Meter, or Hour Meter (timer). The summary of ground water extractions presented in this report is compiled from data generated by all three reporting methods. Ordinance 3717 requires annual pump efficiency tests and/or meter calibration of each well to ensure the accuracy of the data reported.

Disclaimer

While the Agency has made every effort to ensure the accuracy of the data presented in this report, it should be noted that the data are submitted by individual reporting parties and are not verified by Agency staff. In addition, since so many factors can affect the extraction calculations, it is understood that no reporting method is 100 percent accurate. The Agency maintains strict quality assurance in the compilation, standardization, and entry of the data received. The Agency received Ground Water Extraction Reports from ninety-seven percent (97%) of the 1867 wells in the Salinas Valley for the 2012 reporting year. Agricultural and Urban Water Conservation Plan submittals for 2013 were ninety-four percent (94%) and one hundred percent (100%), respectively.

Reporting Format

Ground water extraction data are presented in this report by measurement in acre-feet. One acre-foot is equal to 325,851 gallons.

Ground Water Extraction Data Summary

The Salinas Valley Ground Water Basin is divided into four major hydrologic subareas whose boundaries are derived from discernible changes in the hydrogeologic conditions of the underground aquifers. Figure 1 (below) illustrates the Agency-designated Zones of the Salinas Valley in relation to the hydrologic subareas.

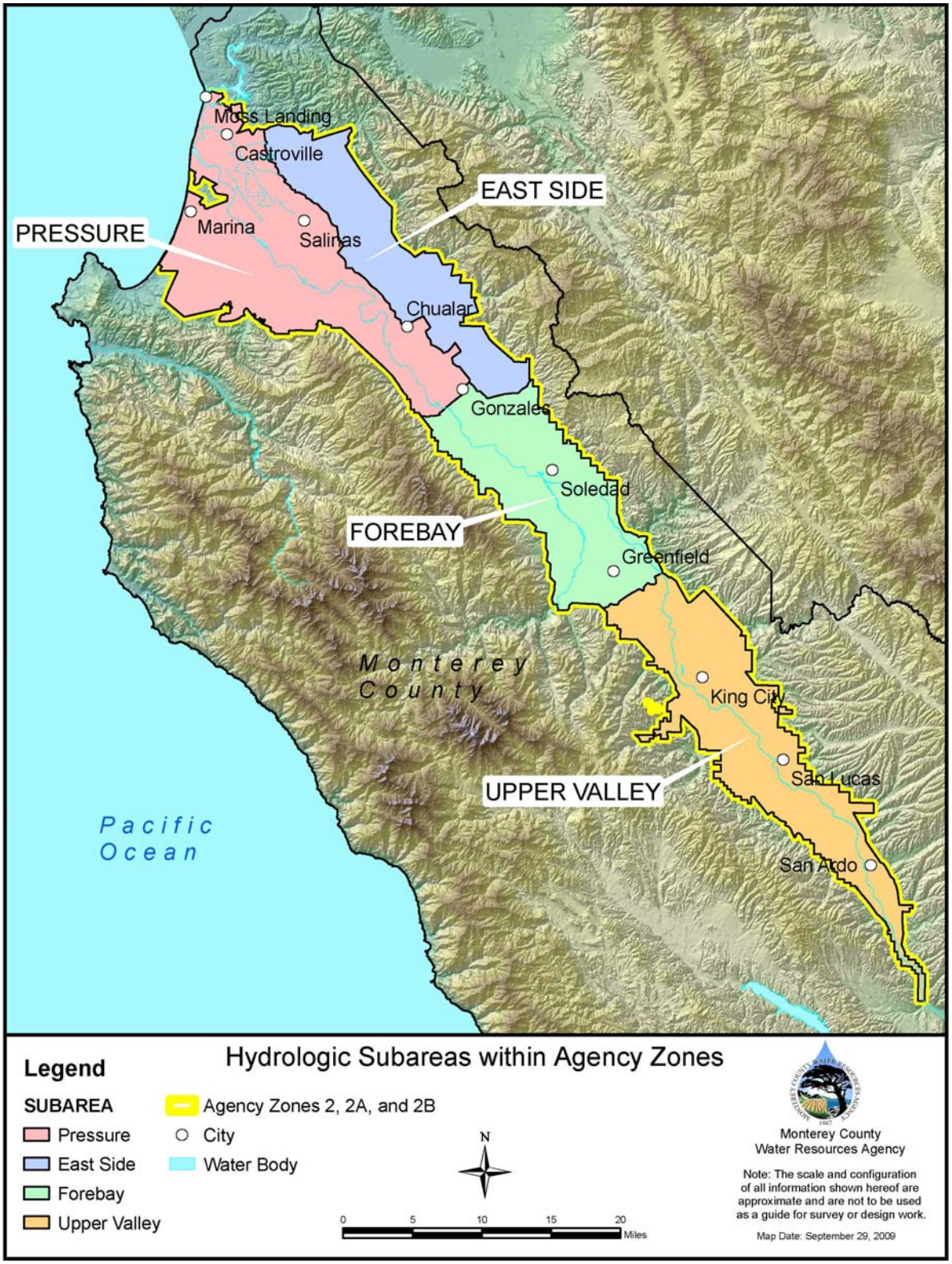

Figure 1. Agency Zones and hydrologic subareas of the Salinas Valley Ground Water Basin

Ground Water Extraction Data Summary (continued)

Summary of Methods Used for Extraction Reporting

The distribution of methods used for ground water extraction reporting (agricultural and urban) for the 2012 reporting year is shown in Table 1; a percentage distribution by volume is shown in Figure 2.

Table 1. Total extraction data by reporting method

Reporting Method	Acre-Feet per Reporting Method	Wells per Reporting Method
Water Flowmeter	343,597	1,380
Electrical Meter	136,543	407
Hour Meter	9,101	18
Total (2012)	489,241	1,806
Average ('03-'12)	**495,968**	**1,756**

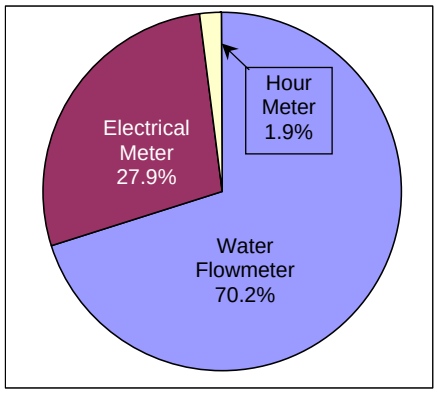

Figure 2. Percentage distribution by volume of methods used for extraction reporting

Total Extraction Data by Hydrologic Subarea and Type of Use

The total ground water extractions for the 2012 reporting year are summarized by hydrologic subarea, type of use (agricultural and urban in Table 2), and percentage (Figure 3).

Table 2. Total extraction data by hydrologic subarea and type of use

Subarea	Agricultural Pumping (acre-feet)	Urban Pumping (acre-feet)	Total Pumping (acre-feet)
Pressure	95,814	18,084	113,898
East Side	82,451	13,092	95,543
Forebay	135,971	7,488	143,459
Upper Valley	132,383	3,957	136341
Total	446,620	42,621	489,241
Percent of Total	**91.3%**	**8.7%**	**100%**

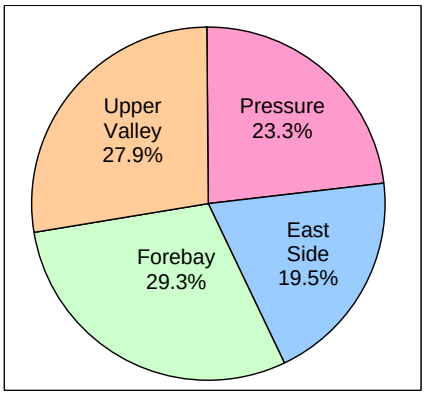

Figure 3. Percentage of total extractions by hydrologic subarea

Urban Extraction Data by City or Area

The total ground water extractions attributed to urban (residential, commercial/institutional, industrial, and governmental) pumping for the 2012 reporting year are summarized by city or area in Table 3. Figure 4 shows how the total urban pumping for 2012 is apportioned among each city or area.

Table 3. Urban extraction data by city or area

City or Area	Urban Pumping (AF)	Percentage of Total
Castroville	776	1.82%
Chualar	130	0.30%
Gonzales	1,454	3.41%
Greenfield	2,426	5.69%
King City	2,735	6.42%
Marina	4,129	9.69%
Other Areas (OA)		
OA-Pressure	3,893	9.13%
OA-East Side	3,434	8.06%
OA-Forebay	933	2.19%
OA-Upper Valley	1,081	2.54%
Salinas	17,360	40.73%
San Ardo	110	0.26%
San Lucas	31	0.07%
Soledad	2,519	5.91%
Soledad Prisons	1,610	3.78%
Total	42,621	100.00%

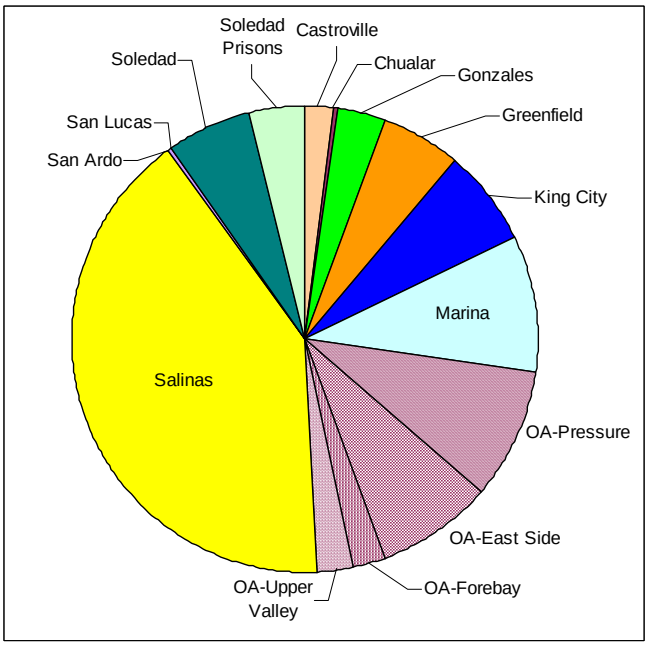

Figure 4. Distribution of urban extraction by city or area

Agricultural Water Conservation Plans

The Agricultural Water Conservation Plans include net irrigated acreage, irrigation method, and crop category. This information is forecasted and indicates what the grower plans to do in the upcoming year. It reflects the changing trends in irrigation methods in the Salinas Valley. Tables 4, 5, 6, and 7 show the distribution of irrigation methods by crop type for 1993, 2011, 2012 and 2013, respectively. Figure 5 (on the following page) illustrates the irrigation method trends from 1993 to 2013.

Table 4. 1993 - net acre distribution of irrigation methods by crop type (based on 94% companies reported)

1993	Furrow	Sprinkler & Furrow	Hand Move Sprinklers	Solid Set Sprinklers	Linear Move	Drip	Other[1]	Total
Vegetables	2,349	84,060	30,764	6,607	3,827	3,682	0	131,289
Field Crops	575	2,173	2,236	90	50	48	0	5,172
Berries	1	0	0	0	0	4,158	0	4,159
Grapes	261	0	0	13,347	0	15,976	0	29,584
Tree Crops	0	0	122	251	0	1,216	10	1,599
Forage	41	202	1,327	0	48	0	189	1,807
Unirrigated								N/A
Total	**3,227**	**86,435**	**34,449**	**20,295**	**3,925**	**25,080**	**199**	**173,610**

Table 5. 2011 - net acre distribution of irrigation methods by crop type (based on 94% companies reported)

2011	Furrow	Sprinkler & Furrow	Hand Move Sprinklers	Solid Set Sprinklers	Linear Move	Drip	Other[1]	Total
Vegetables	30	24,027	23,409	9,907	869	62,275	185	120,702
Field Crops	35	444	266	80	1,416	544	0	2,785
Berries	0	38	0	340	0	6,810	0	7,188
Grapes	0	0	0	620	0	33,008	0	33,628
Tree Crops	0	0	0	366	0	1,742	0	2,108
Forage	18	0	133	0	0	0	132	283
Other Type[2]	0	126	2,427	175	12	1,321	100	4,161
Unirrigated								6,137
Total	**83**	**24,635**	**26,235**	**11,488**	**2,297**	**105,700**	**417**	**176,992**

Table 6. 2012 - net acre distribution of irrigation methods by crop type (based on 92% companies reported)

2012	Furrow	Sprinkler & Furrow	Hand Move Sprinklers	Solid Set Sprinklers	Linear Move	Drip	Other[1]	Total
Vegetables	0	22,556	19,469	7,476	677	69,040	2,001	121,219
Field Crops	0	323	284	206	1,416	389	140	2,758
Berries	0	122	0	100	0	7,707	0	7,929
Grapes	0	0	0	363	0	34,381	0	34,744
Tree Crops	0	0	0	0	0	1,724	0	1,724
Forage	0	138	172	0	0	1	0	311
Other Type[2]	36	126	2,297	126	12	886	20	3,503
Unirrigated								6,317
Total	**36**	**23,265**	**22,222**	**8,271**	**2,105**	**114,128**	**2,161**	**178,505**

Table 7. 2013 - net acre distribution of irrigation methods by crop type (based on 94% companies reported)

2013	Furrow	Sprinkler & Furrow	Hand Move Sprinklers	Solid Set Sprinklers	Linear Move	Drip	Other[1]	Total
Vegetables	389	19,621	15,737	12,209	591	69,773	2,463	120,783
Field Crops	0	167	166	121	0	280	0	734
Berries	0	122	0	0	0	6,610	0	6,732
Grapes	0	0	0	363	0	34,358	0	34,721
Tree Crops	0	0	0	0	0	1,695	0	1,695
Forage	0	145	107	2	0	1	68	323
Other Type[2]	0	126	2,592	126	7	900	25	3,776
Unirrigated								1,280
Total	**389**	**20,181**	**18,602**	**12,821**	**598**	**113,617**	**2,556**	**170,044**

[1] "Other" may include an irrigation system not listed here or a different combination of systems
[2] "Other Type" are for other crop types not included, i.e. cactus, flower bulbs, etc.
NOTE: Percentage of companies reported varies from year to year

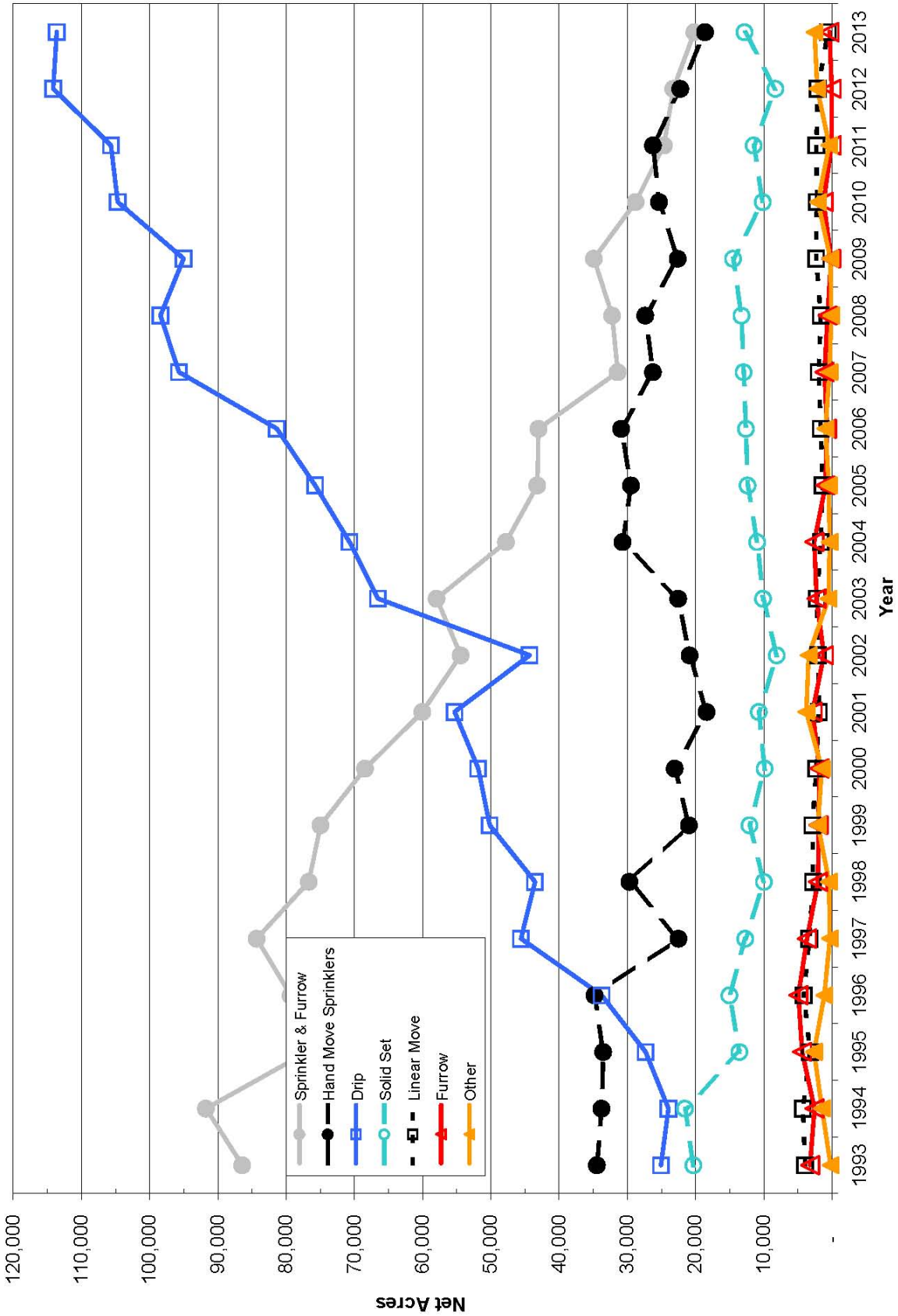

Figure 5. Types of irrigation methods used in the Salinas Valley based on companies reported

NOTE: Reported net acres vary from year to year

Agricultural Water Conservation Plans (continued)

Since 1991, Salinas Valley growers have submitted Agricultural Water Conservation Plans to the Agency. Table 8 shows the number of net acres, by year, for selected Best Management Practices (BMPs) or water conservation measures which were reported to be implemented over the past five years.

Table 8. Agricultural Best Management Practices reported to be adopted from 2009 through 2013

Best Management Practices	2009	2010	2011	2012	2013
12 Months Set Aside	9,043	7,447	3,285	8,172	1,314
Summer Fallow	509	692	1,944	688	1,462
Water Flowmeters	124,561	138,957	144,353	141,595	132,104
Time Clock/Pressure Switch	126,694	144,853	153,715	152,488	144,693
Soil Moisture Sensors	32,427	44,644	46,121	46,309	45,953
Pre-Irrigation Reduction	84,693	96,908	99,362	94,954	92,338
Reduced Sprinkler Spacing	83,046	90,065	97,926	90,503	89,289
Sprinkler Improvements	105,495	111,889	115,517	115,946	108,617
Off-Wind Irrigation	107,552	114,843	116,209	114,110	108,243
Leakage Reduction	105,702	113,820	115,255	113,372	110,565
Micro Irrigation System	71,710	67,383	87,464	93,146	84,031
Surge Flow Irrigation	7,182	8,785	11,473	12,275	10,154
Tailwater Return System	10,046	16,581	15,402	13,577	8,220
Land Leveling/Grading	56,482	73,361	76,436	79,534	65,306

Note: Due to unique crop rotations, it is difficult to account for each BMP used on total Crop Acres; therefore Net Acres were used.

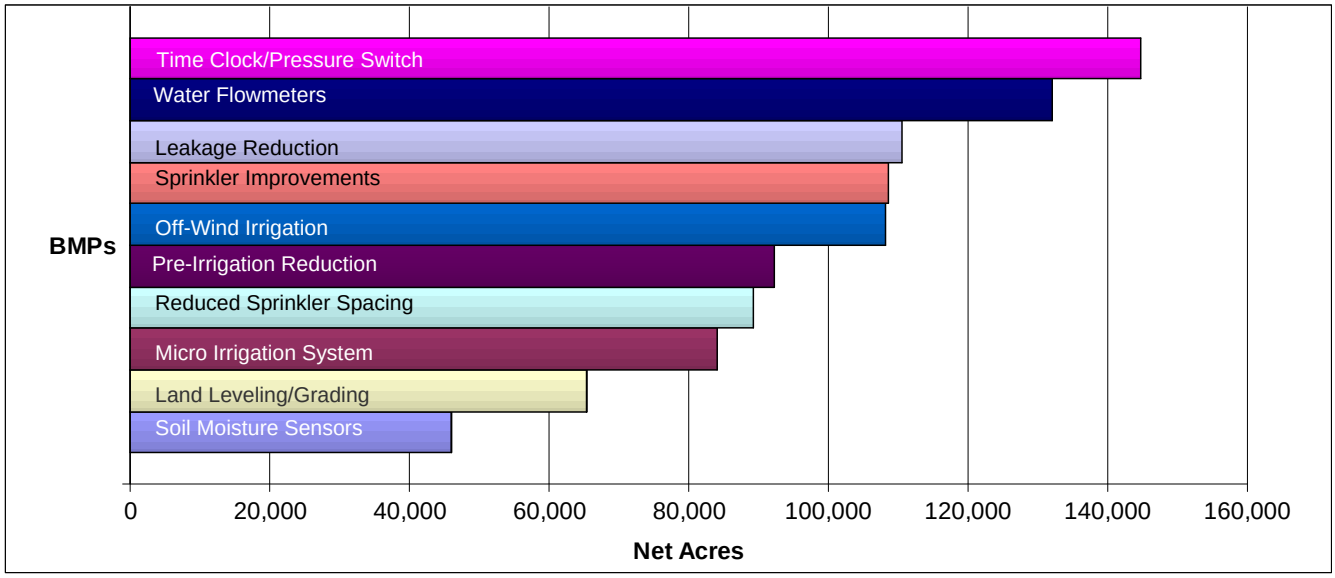

Figure 6. Top Ten Best Management Practices forecasted for 2013 based on reported net acres

Water and Land Use Forms

Agricultural Water Pumped

The following three figures present the agricultural water pumped (Fig. 7), irrigated net acres (Fig. 8), and amount of water used per acre (Fig. 9) by hydrologic subarea and crop type. The data was compiled using the reported acreage and water pumped from the 2012 Water and Land Use Forms. The data accounts for all crop types reported and all reporting methods: Water Flowmeter, Electrical Meter, and Hour Meter.

Changing weather patterns, variable soils, and crop types affect the amount of water needed for efficient irrigation. Even during a normal rain year, pumping rates will vary from one subarea to another and crop types will vary depending on economic demand.

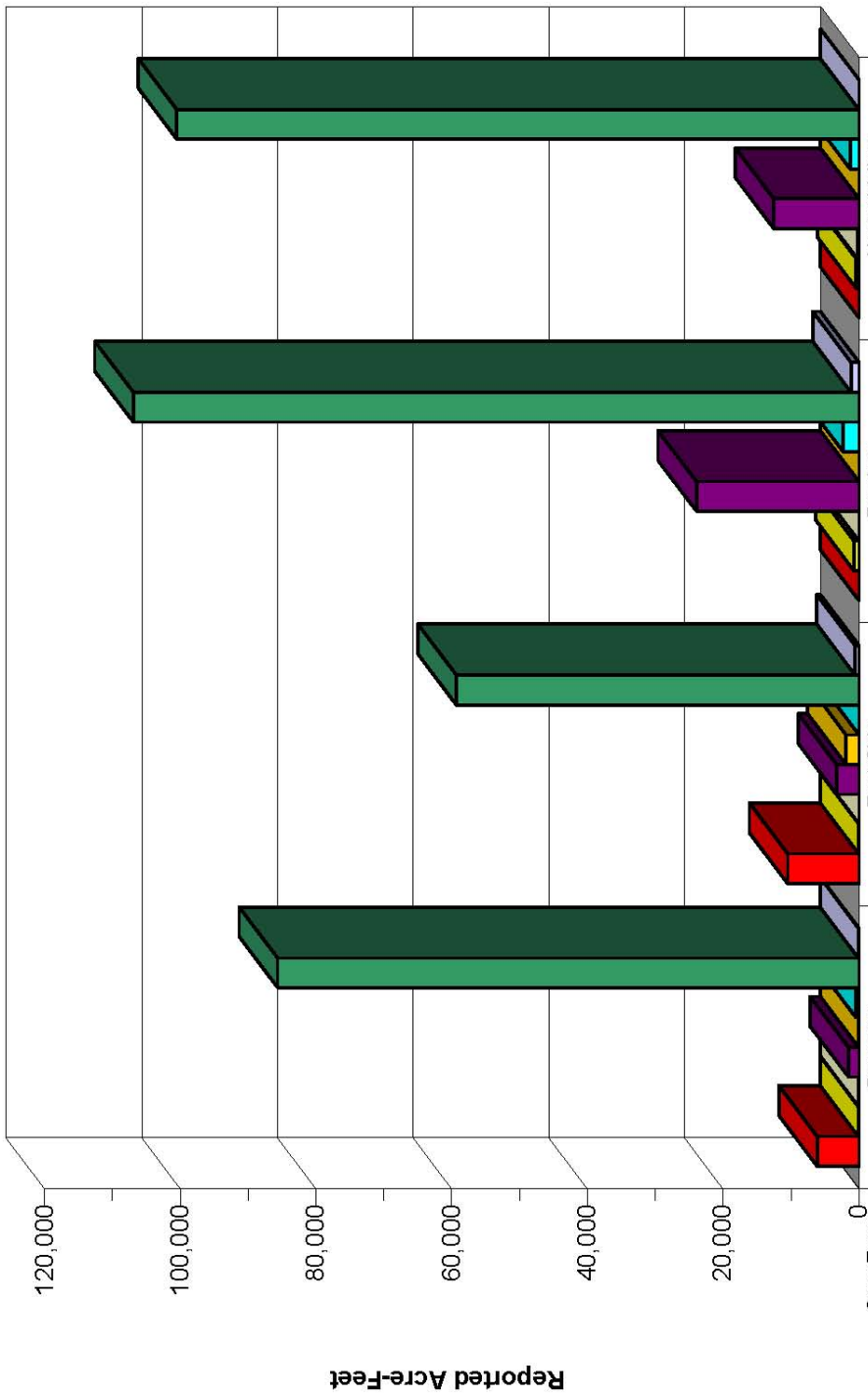

Crop Type	Pressure	East Side	Forebay	Upper Valley
Berries	6,120	10,491	-	-
Field	65.0	44.9	682	445
Forage	15.2	-	-	261
Grapes	1,523	3,305	23,943	12,560
Nursery	21.1	1,912	-	-
Trees	448	0.7	2,305	1,278
Vegetables	85,657	59,320	106,929	100,542
Other	55.3	563	1,143	-

Other = includes cactus, flower bulbs, etc

Hydrologic Subarea

Figure 7. 2012 reported acre-feet by crop type & hydrologic subarea

Water and Land Use Forms (continued)

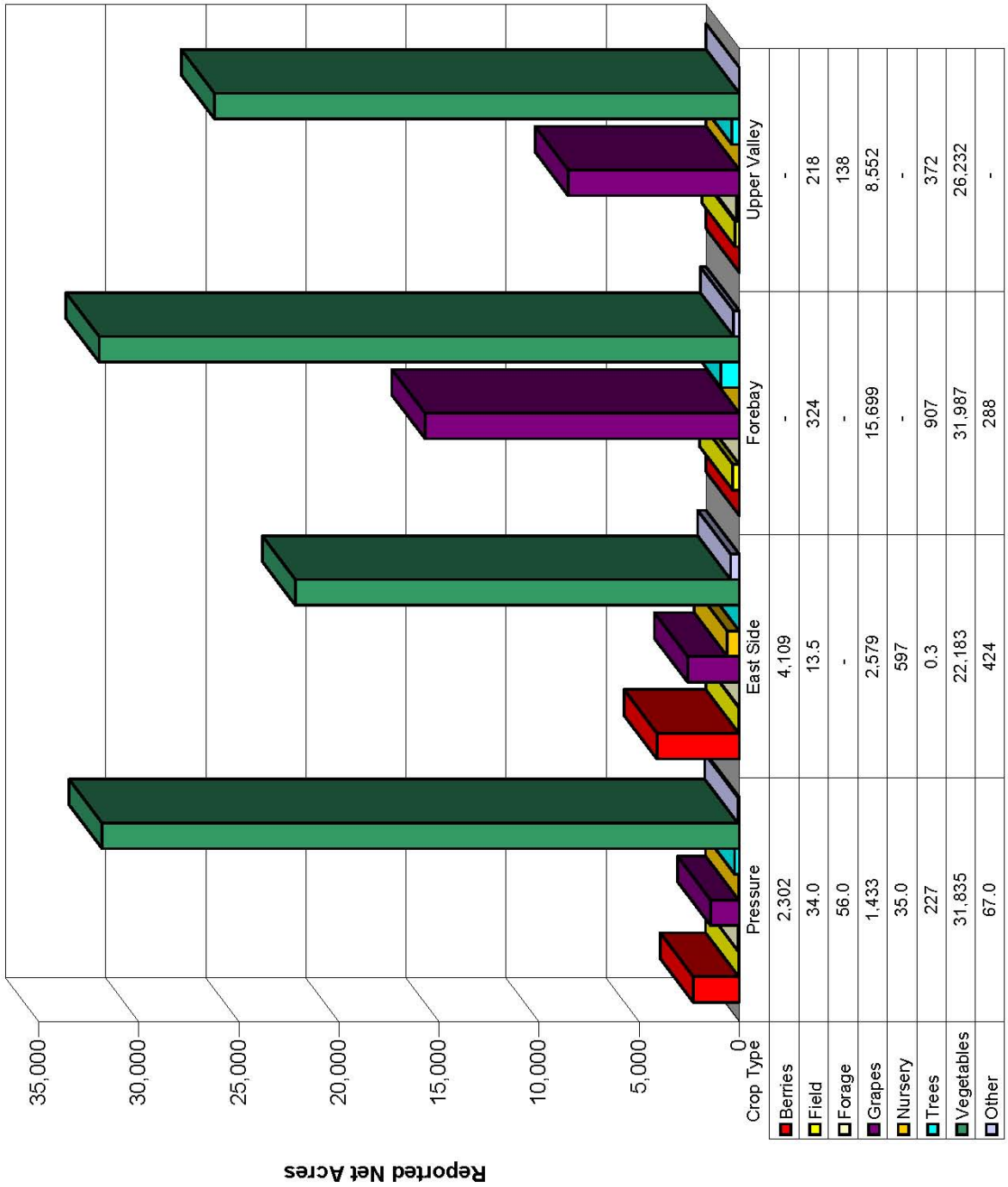

Figure 8. 2012 reported net acres by crop type & hydrologic subarea

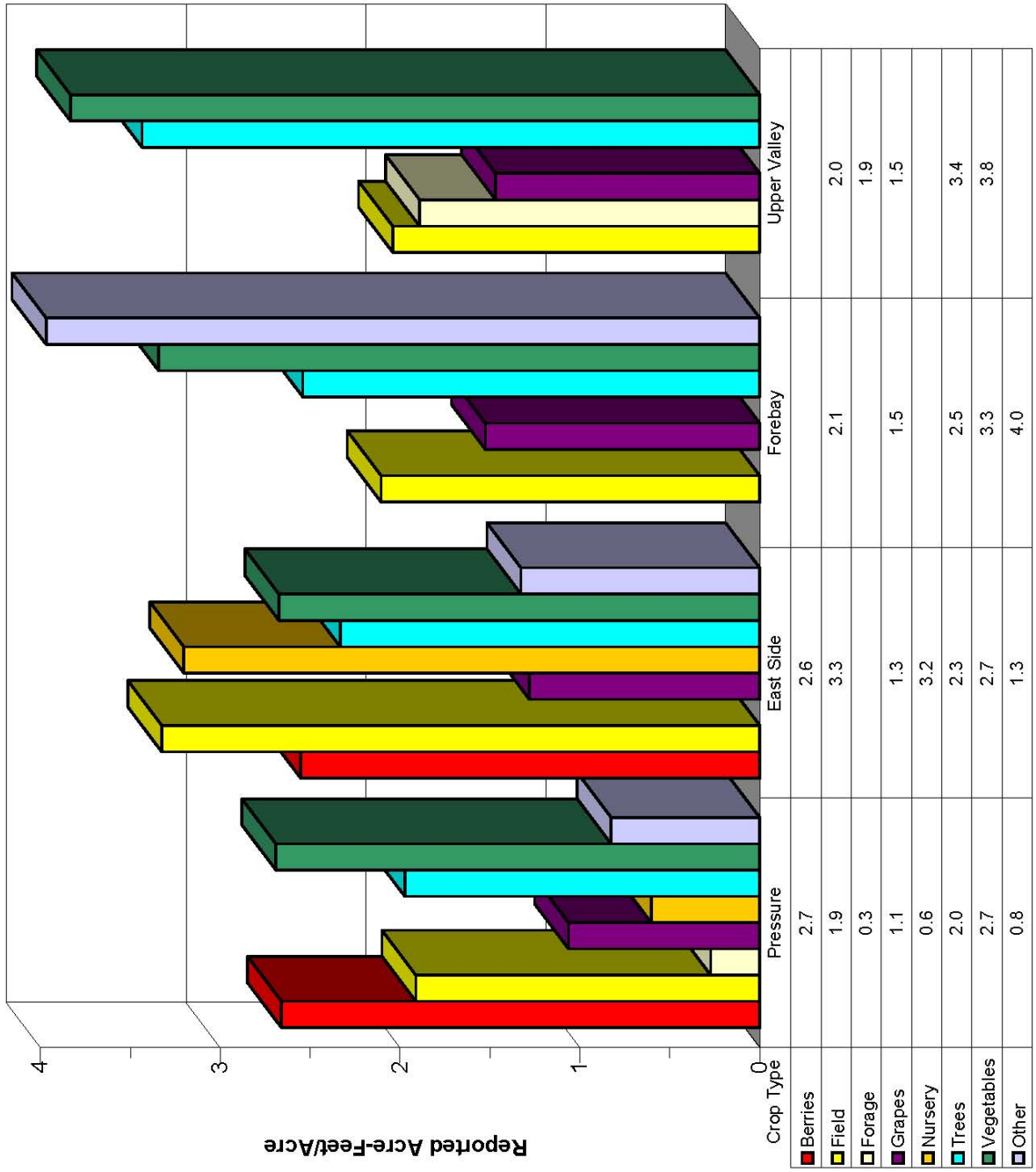

Figure 9. 2012 reported acre-feet/acre by crop type & hydrologic subarea

Urban Water Conservation Plans

Since 1996, the Agency has been collecting data for the Urban Water Conservation Plan program. Table 9 shows the forecasted adoption of "Best Management Practices" (water conservation measures) for the past three years, as a percentage of total acreage reported. It is important to note that, while all of the listed practices apply to "large" water systems (200 or more customer connections), not all apply to "small" water systems (between 15 and 199 customer connections). The practices that apply **only** to large systems are printed in **bold** below.

Table 9. Urban Best Management Practices reported to be adopted from 2011 through 2013

Best Management Practices	2011	2012	2013
Provide speakers to community groups and media	**85%**	**81%**	**85%**
Use paid and public service advertising	**74%**	**96%**	**89%**
Provide conservation information in bill inserts	94%	95%	94%
Provide individual historical water use information on water bills	92%	92%	96%
Coordinate with other entities in regional efforts to promote water conservation practices	94%	95%	94%
Work with school districts to provide educational materials and instructional assistance	**61%**	**92%**	**91%**
Implement requirements that all new connections be metered and billed by volume of use	99%	99%	98%
Establish a program to retrofit any existing unmetered connections and bill by volume of use	77%	78%	39%
Offer free interior and exterior water audits to identify water conservation opportunities	**98%**	**100%**	**98%**
Provide incentives to achieve water conservation by way of free conservation fixtures (showerheads, hose end timers) and/or conservation "adjustments" to water bills	**94%**	**90%**	**89%**
Enforcement and support of water conserving plumbing fixture standards, including requirement for ultra low flush toilets in all new construction	**78%**	**98%**	**94%**
Support of State/Federal legislation prohibiting sale of toilets using more than 1.6 gallons per flush	96%	97%	97%
Program to retrofit existing toilets to reduce flush volume (with displacement devices)	66%	34%	48%
Program to encourage replacement of existing toilets with ultra low flush (through rebates, incentives, etc.)	**89%**	**95%**	**89%**
Provide guidelines, information, and/or incentives for installation of more efficient landscapes and water-saving practices	94%	90%	94%
Encourage local nurseries to promote use of low water use plants	78%	78%	77%
Develop and implement landscape water conservation ordinances pursuant to the "Water Conservation in Landscaping Act"	**63%**	**63%**	**63%**
Identify and contact top industrial, commercial, and/or institutional customers directly; offer and encourage water audits to identify conservation opportunities	**89%**	**87%**	**89%**
Review proposed water uses for new commercial and industrial water service, and make recommendations for improving efficiency before completion of building permit process	**64%**	**84%**	**84%**
Complete an audit of water distribution system at least every three years as prescribed by American Water Works Association	74%	92%	93%
Perform distribution system leak detection and repair whenever the audit reveals that it would be cost effective	79%	97%	98%
Advise customers when it appears possible that leaks exist on customer's side of water meter	99%	99%	97%
Identify irrigators of large landscapes (3 acres or more) and offer landscape audits to determine conservation opportunities	**90%**	**89%**	**90%**
Provide conservation training, information, and incentives necessary to encourage use of conservation practices	**91%**	**92%**	**96%**
Encourage and promote the elimination of non-conserving pricing and adoption of conservation pricing policies	91%	86%	86%
Implementation of conservation pricing policies	96%	91%	91%
Enact and enforce measures prohibiting water waste as specified in Agency Ordinance No. 3932 or as subsequently amended, and encourage the efficient use of water	64%	71%	76%
Implement and/or support programs for the treatment and reuse of industrial waste water / storm water / waste water	**53%**	**67%**	**66%**

This page left blank intentionally.

Monterey County
Board of Supervisors

Fernando Armenta, Chair	District #1
Louis Calcagno	District #2
Simón Salinas	District #3
Jane Parker	District #4
Dave Potter	District #5

Monterey County Water Resources Agency
Board of Directors

Vacant	District #1
Silvio Bernardi	District #2
Richard Ortiz	District #3
Deidre Sullivan	District #4
Ken Ekelund, Chair	District #5
Mike Scattini	Grower-Shipper Association
Claude Hoover, Vice Chair	Monterey County Farm Bureau
David Hart	Agricultural Advisory Committee
Fred Ledesma	Mayor Select Committee

Monterey County Water Resources Agency
Executive Management

David Chardavoyne, General Manager
Robert Johnson, Assistant General Manager, Chief – Water Resources Planning and Management
Brent Buche, Assistant General Manager, Chief – Operations and Maintenance
Cathy Paladini, Finance Manager – Administrative Services
Wini Chambliss, Administrative Services Assistant

Summary Report Team

Elizabeth Krafft, Senior Hydrologist
Tamara Voss, Hydrologist
Teresa Campa, Engineering Aide II

For more information, contact:

Monterey County Water Resources Agency
893 Blanco Circle, Salinas

Mailing address:
P.O. Box 930, Salinas, CA 93902-0930

831.755.4860
831.424.7935 (fax)

www.mcwra.co.monterey.ca.us

MONTEREY COUNTY WATER RESOURCES AGENCY

1947

US007832959B1

(12) **United States Patent**
Groen et al.

(10) **Patent No.: US 7,832,959 B1**
(45) **Date of Patent: Nov. 16, 2010**

(54) **METHOD OF RESTORATION OF A HIGHLY SALINE LAKE**

(75) Inventors: **Pieter van Groen**, De Bult (NL); **Jorrit K. de Groot**, Rotterdam (NL)

(73) Assignee: **Bean Stuyvesant, L.L.C.**, Belle Chasse, LA (US)

(*) Notice: Subject to any disclaimer, the term of this patent is extended or adjusted under 35 U.S.C. 154(b) by 997 days.

(21) Appl. No.: **11/379,153**

(22) Filed: **Apr. 18, 2006**

Related U.S. Application Data

(60) Provisional application No. 60/672,310, filed on Apr. 18, 2005.

(51) **Int. Cl.**
E02B 13/00 (2006.01)

(52) **U.S. Cl.** **405/52**; 405/74; 405/80; 210/170.01; 210/170.11

(58) **Field of Classification Search** 405/52, 405/80, 60, 73, 74; 210/170.01, 170.09, 210/170.11

See application file for complete search history.

(56) **References Cited**

U.S. PATENT DOCUMENTS

5,322,035	A *	6/1994	Hawes et al.	119/227
5,807,030	A	9/1998	Anderson et al.	
5,902,070	A	5/1999	Bradley	
6,623,214	B1	9/2003	Hauske et al.	
6,626,611	B2	9/2003	Winters et al.	
6,726,406	B2	4/2004	Gilmore et al.	
6,773,595	B2	8/2004	Gantzer	

OTHER PUBLICATIONS

Neal Matthews, Sea Change: Some Farmers Offer up Their Plan of Action, Mar. 9, 2005, the Union-Tribune.*

Proposed Salton Sea Authority Plan, Enhanced Circulation Design, Jul. 22, 2005.*

Salton Sea Restoration—The Cascade Alternative, Presented by: The Salton Sea Restoration Consortium, Oct., 2004, pp. 1-55.*

* cited by examiner

Primary Examiner—David J Bagnell
Assistant Examiner Benjamin Fiorello
(74) *Attorney, Agent, or Firm*—Garvey, Smith, Nehrbass & North, L.L.C.; Charles C. Garvey, Jr.

(57) **ABSTRACT**

A method of restoring a lake that has a high saline level is disclosed herein. In order to restore the lake, a series of concentric dikes or levees are provided that separate the lake into a plurality of smaller lake sections, each having a water surface. The smaller lake sections include an outer lake section which is next to the periphery of the lake and one or more inner lake sections. Each dike and each smaller lake section water surface have an elevation. Water is flowed from an influent source to the outer lake section and then to each of the inner lake sections. The outer lake section surface has a higher elevation. The inner lake section surfaces have cascading lower surface elevations. At a central area, a breathing brine area is provided that is surrounded by the smaller lake sections to provide an area that can be used to concentrate brine. The smaller lake sections can have differing salinity levels for sustaining diverse marine and plant life.

48 Claims, 5 Drawing Sheets

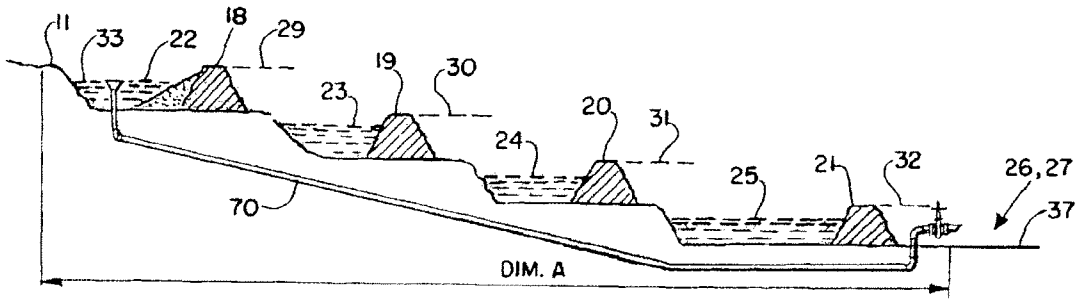

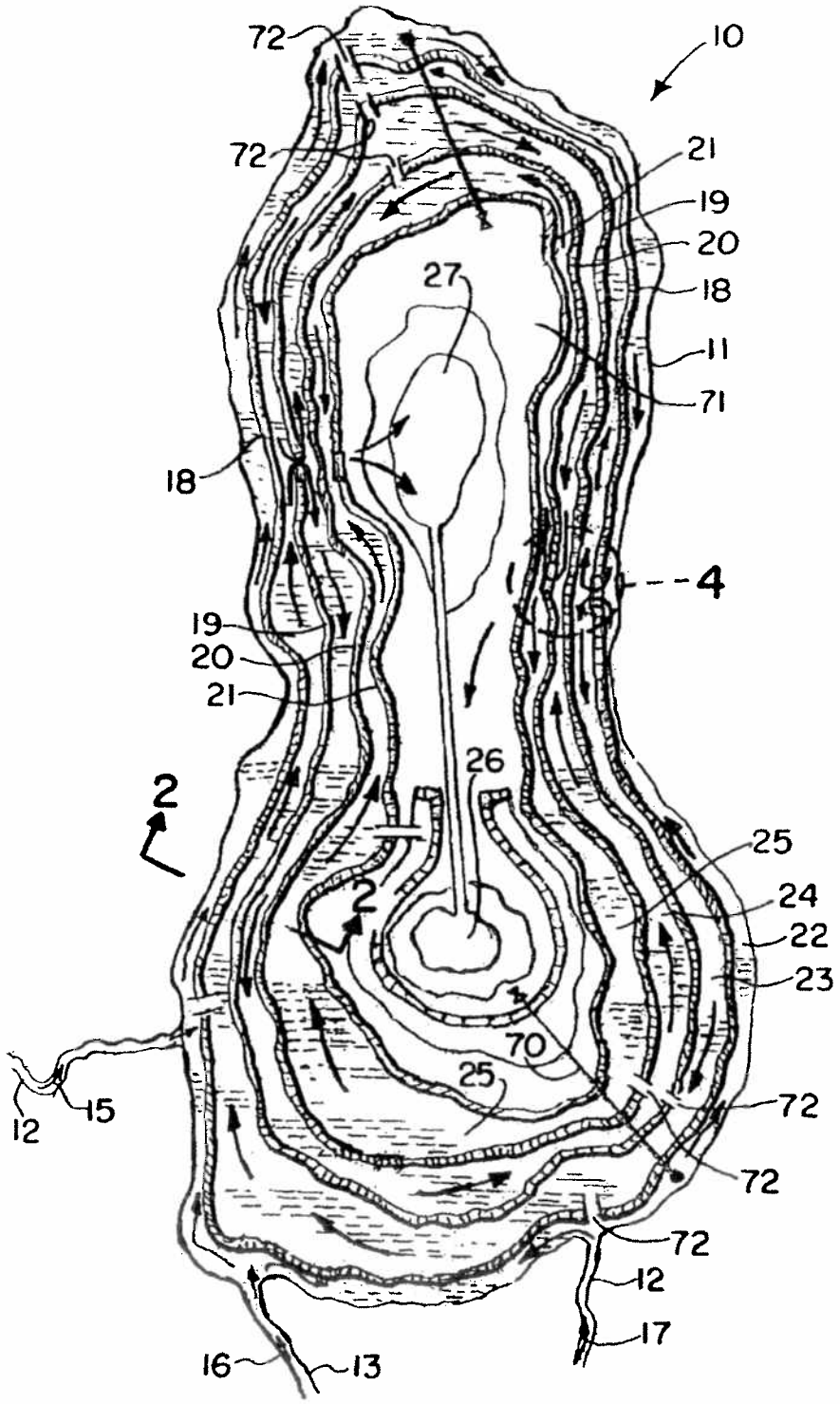
72
10
72
21
19
20
27
18
11
71
18
4
19
20
21
26
2
25
2
24
22
23
70
25
72
15
12
72
72
12
17
16
13

FIG. 1.

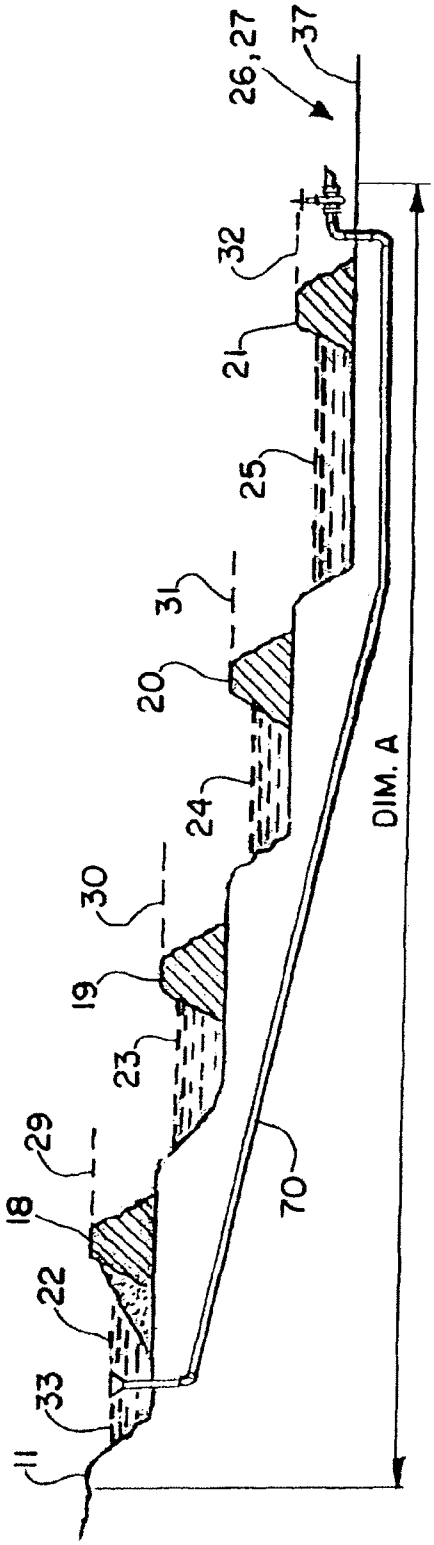

FIG. 2.

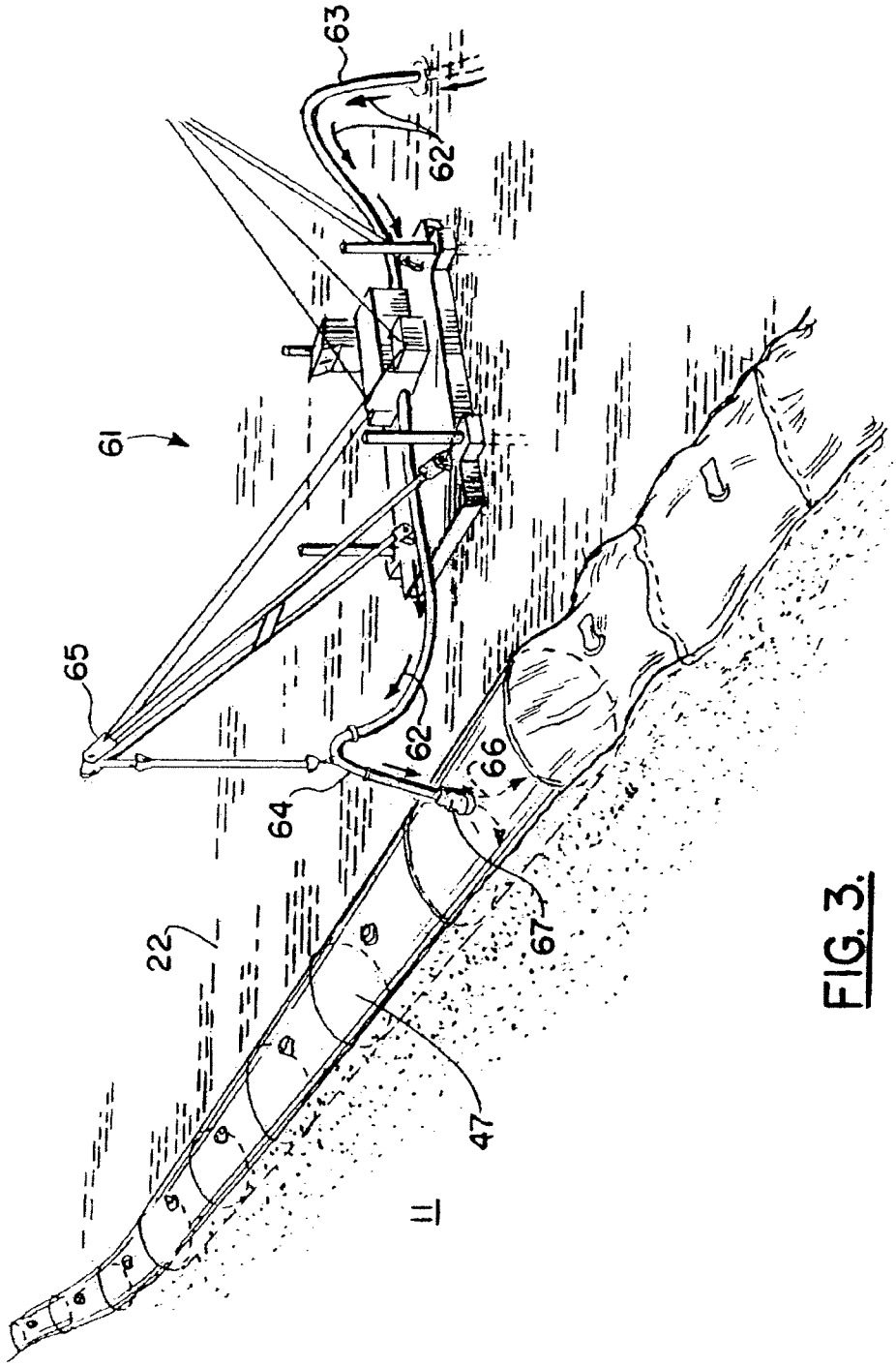

FIG. 3.

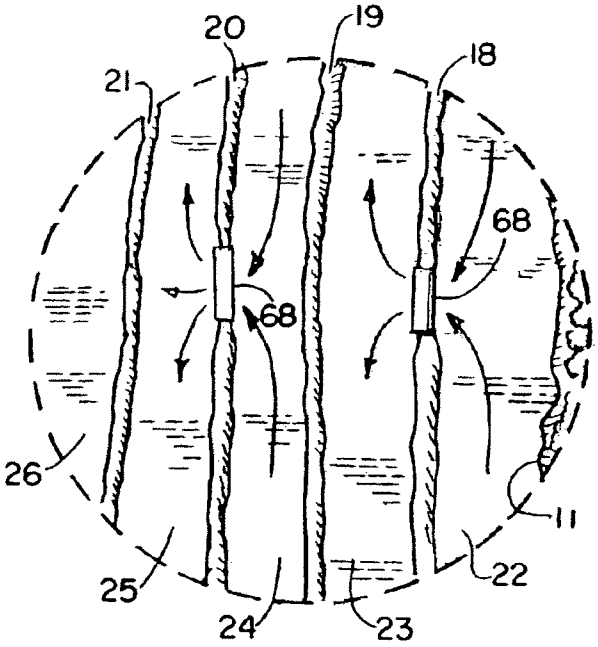

FIG. 4.

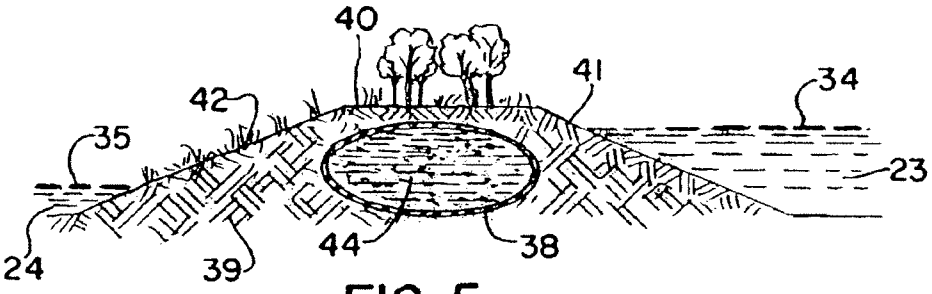

FIG. 5.

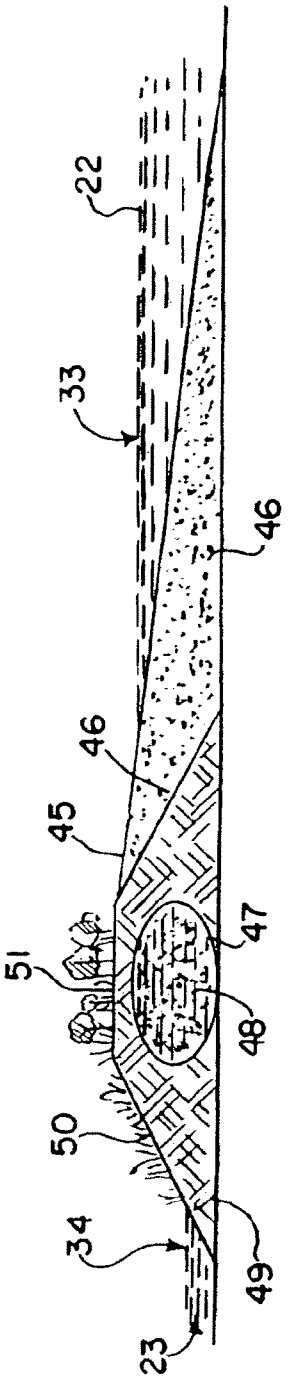
22
33
46
46
45
47
51
48
50
34
49
23

FIG. 6.

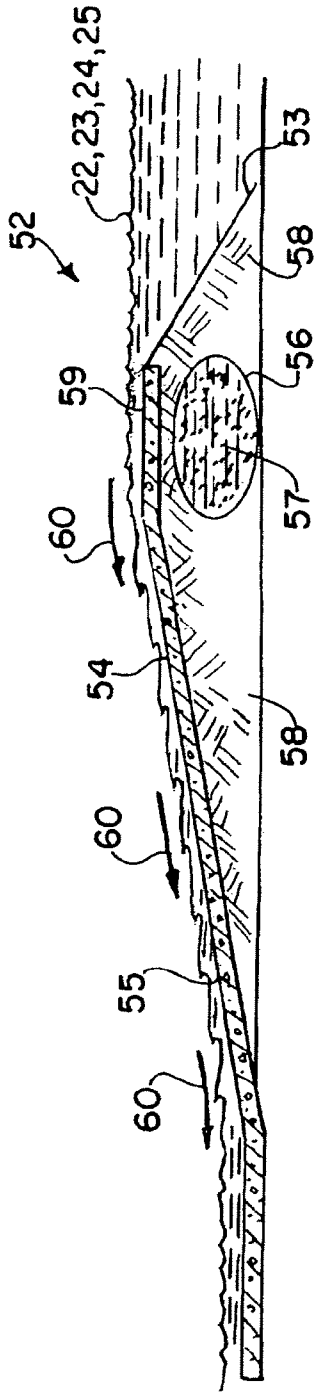
52
22,23,24,25
53
58
56
59
57
60
54
58
60
55
60

FIG. 7.

METHOD OF RESTORATION OF A HIGHLY SALINE LAKE

CROSS-REFERENCE TO RELATED APPLICATIONS

Priority of U.S. Provisional Patent Application Ser. No. 60/672,310, filed Apr. 18, 2005, incorporated herein by reference, is hereby claimed.

STATEMENT REGARDING FEDERALLY SPONSORED RESEARCH OR DEVELOPMENT

Not applicable

REFERENCE TO A "MICROFICHE APPENDIX"

Not applicable

BACKGROUND OF THE INVENTION

1. Field of the Invention

The present invention relates to restoration of a lake having a high saline content. More particularly, the present invention relates to an improved method of restoring a highly saline lake that utilizes inner and outer dikes or levees (preferably concentrically positioned), elongated smaller lakes formed between the dikes, a central area providing one or more breathing brine fields, wherein salinity of inflow gradually increases from outer lake to the inner lakes to the breathing brine field or fields. In the process, the overall lake water inflow needed to maintain several separate yet healthy lake ecosystems can be reduced.

2. General Background of the Invention

The Salton Sea is located in a closed basin in Riverside and Imperial Counties in southern California, south of Indio and north of El Centro. The Salton Sea is more than 220 feet below sea level and has no natural outlet. The Salton Sea Basin is part of the lower Colorado River delta system. Historically, lakes have existed in this basin as the course of the Colorado River has shifted. The current body of water (Salton Sea) was formed in 1905 when a levee break along the Colorado River caused flows from the Colorado River to enter the basin for about 18 months. Since 1905, the Salton Sea has fluctuated in size with varying inflow. It recently has had a surface area of 365 square miles.

Currently, the Salton Sea is filled by the agricultural runoff from the Colorado River Basin. In particular, approximately 80% of Salton Sea inflows come from the Imperial Valley. Since the Salton Sea has no outlet, evaporation produces the only export of water. Nearly all constituents in the inflow, such as salts, nutrients and fertilizers remain in the Salton Sea. Currently, the Sea is approximately 25% saltier than ocean water, with a continuing trend of increasing salinity. Eventually, a point will be reached where current biological activity in the Sea will cease, as is the case with other highly saline lakes such as Mono Lake. Under these highly saline conditions the benthic organisms that support the current ecology of the Salton Sea could no longer survive. The fisheries supported by those organisms would likewise disappear, and have practically vanished already. An ecology based on organisms adapted to highly saline conditions, such as brine shrimp, would result. Even under existing conditions, a project for the restoration of the Salton Sea (including improvement and stabilization of the water quality) is critically needed.

Accelerating these effects would be the reduced inflows to the Salton Sea anticipated under the 2003 Quantification Settlement Agreement (QSA). The QSA provides for the phased transfer of up to 560,000 acre-feet per year of water from agricultural to urban uses, resulting in a significant reduction of agricultural flows to the Sea, of at least 300,000 acre-feet per year. It is assumed that a water transfer of approximately the scale of that contemplated by the QSA will result in reduced inflows to the Salton Sea.

In future years, additional transfers may also occur as demand increases in the expanding urbanized areas of Southern California. For example, the Metropolitan Water District of Southern California (MWD) has pending a water rights application with the State Water Resources Control Board (SWRCB) seeking to divert all of the flows from the Alamo River and other agricultural sources that would otherwise reach the Salton Sea.

Filed in 1997, MWD's application contends that it has the right to take much of the inflow of the Salton Sea and divert it to its service area for various uses. MWD supplemented its application in June 2004 and reiterated that it continues to seek the inflows for diversion, although it recognizes that the amount of the inflows may be reduced due to various conservation measures described in the QSA.

If an appropriate Salton Sea restoration plan is not implemented, a substantial portion of the inflow may be diverted permanently from the Salton Sea area such that no restoration would be possible. The resulting reduction in inflows would be severe, ranging from approximately 400,000 to 450,000 acre feet per year, with net inflows to the Salton Sea being reduced to as low as 468,000 acre feet per year (assuming diversions comparable to that contemplated under the QSA).

Over time, those smaller inflows will result in a reduction in the surface area of the Sea. This reduction could expose previously inundated sediments. The reduced water volume in the Salton Sea will also result in a corresponding increase in salinity. Without affirmative restoration activities, a number of adverse environmental consequences would result, such as a reduction of the Sea's important habitat values for the Pacific Flyway, increased air pollution, and decreased aesthetics values.

Any restoration plan must solve both of the key problems faced by the Salton Sea, water quality and water quantity. Over the years, a number of options have been explored for addressing these concerns. In 1998, the Salton Sea Authority, in a joint lead with the federal Bureau of Reclamation, initiated an environmental review of a number of alternatives to address the problems that existed at the time. These alternatives primarily focused on "whole-sea" restoration approaches such as the conveyance of water to and/or from the ocean to address the elevation and salinity problems, various evaporation options to facilitate the removal of salt, and desalination options using vertical tube evaporation technology. This effort, however, was not completed, primarily due to critical problems identified with all of the alternatives being evaluated, such as excessive costs or environmental impacts.

In April 2004, the Salton Sea Authority (SSA) evaluated four "reasonable" restoration alternatives: (1) no marine lake; (2) south marine lake without elevation control; (3) south marine lake with elevation control, and (4) north marine lake with elevation control. The SSA ultimately concluded that the North Lake concept, combined with other features, was its preferred project.

After much discussion between DWR and the interested parties, four alternatives, two of which draw upon the work completed by the Salton Sea Authority in 2004, gained promi-

nence as a reasonable range for the alternatives evaluation: (1) the "Low Sea" alternative, which allows the sea level to drop and involves the construction of a relatively small brine pond, (2) the "Shore Lake" alternative, which involves the creation of a relatively deep short lake along the entire perimeter of the current sea, separated from a dry area and brine pond in the interior by a dike (similar to the SSA's In-Sea Solar Evaporation Pond alternative, but with a different configuration), (3) the "North Lake" alternative (the SSA's "North Lake with elevation control" alternative) which separates the sea with a relatively high dam and allows the southern portion of the lake to largely dry out, except for a brine pond, and (4) the "South Lake" alternative (the SSA's "South Lake with elevation control" alternative) which is similar to the North Lake alternative with the dry areas and brine pond to the north.

The Salton Sea Reclamation Act of 1998 formulates the goals of the restoration as follows: continue to use the Sea as a reservoir for irrigation drainage; reduce and stabilize the overall salinity of the Sea; stabilize surface elevation of the Sea; reclaim, in the long-term, healthy fish and wildlife resources and their habitats; and enhance the potential for recreational uses and economic development of the Sea.

The 2000 Draft EIS/EIR on restoration of the Salton Sea prepared by USER and the Salton Sea Authority revised the fourth of these objectives as follows: provide a safe, productive environment at the Sea for resident and migratory birds and endangered species.

The state QSA implementing legislation requires that the preferred alternative provide, to the maximum extent feasible, for attainment of three key objectives, which further refine the habitat objective and add an objective relating to the air quality impacts: restoration of long-term stable aquatic and shoreline habitat for the historic levels and diversity of fish and wildlife that depend on the Salton Sea; elimination of air quality impacts from the restoration projects; and protection of water quality.

Additionally, in order to be successful, the project will need to be economically viable, implying the following objective: plan, construct, develop and operate the restoration project within the practical economic constraints of available funding sources and maximizing economic benefits.

As with these economic factors, in order to be successful the project must be one that can receive all required permits and other entitlements, satisfying the following objectives: qualify the project as the Least Environmentally Damaging Alternative under the Clean Water Act 404(b) (1) guidelines; ensure that the project avoids jeopardy to endangered or threatened species, or the adverse modification of designated critical habitat, and otherwise meets USFWS permitting requirements; comply with Clean Air Act general conformity requirements; and fully comply with all other regulatory programs.

A number of other practical factors also need to be addressed in the selection and implementation of an alternative: 1) ensure timely achievement of project benefits; 2) maximize collateral benefits of the project, particularly the provision of effective water storage capacity that can assist in the management of fluctuating Colorado River flows, and conveyance of water from the IID inflows to other potential users; 3) allow for flexibility of design and construction, in particular to adjust to the actual pattern of water transfers over the coming decades; 5) minimize seismic risks; 6) maximize public acceptance; and 7) maximize the active participation of the local residents in the construction of the project.

The following U.S. Patents are possibly related to lake restoration and are each incorporated herein by reference.

TABLE

PAT. NO.	TITLE	ISSUE DATE
5,807,030	Stabilizing Elements for Mechanically Stabilized Earthen Structure	Sep. 15, 1998
5,902,070	Geotextile Container and Method of Producing Same	May 11, 1999
6,623,214	Modification of Geotextile Tubes	Sep. 23, 2003
6,626,611	Beach Restoration and Regeneration Systems, Methods and Compositions	Sep. 30, 2003
6,726,406	In Situ Formation of Reactive Barriers for Pollution Control	Apr. 27, 2004
6,773,595	Compartmentalized Facultative Lagoon and Method of Creating and Maintaining Such a Lagoon	Aug. 10, 2004

BRIEF SUMMARY OF THE INVENTION

The method of the present invention provides a series of concentric dikes that can be formed through the installation of geotubes, which are used to create "cascade" levels or terraces of wetlands, ponds and marine lakes.

The method of the present invention optionally provides a wide variation of wetlands, ponds and marine lakes, from deep to shallow and from nearly fresh to ocean salinity. The range of habitats meet the needs of eco-tourism, water recreation and fishing while decreasing salinity, protecting the environment and protecting farmland which depends on conditions created by the sea.

The flexible design of the present invention allows to adjust the remaining total wet surface to the actual remaining inflows, hence to the actual transfers. In view of all uncertainties around the transfers, the flexibility of the design is essential.

The main construction consists of many hundreds of miles of small low head dikes which is attractive in view of safety (compare to high head dams in seismic areas). Also the type of dike construction (e.g. geotube) will enhance safety. Repetition of elements facilitates optimization and efficiency during the phased implementation.

BRIEF DESCRIPTION OF THE SEVERAL VIEWS OF THE DRAWINGS

For a further understanding of the nature, objects, and advantages of the present invention, reference should be had to the following detailed description, read in conjunction with the following drawings, wherein like reference numerals denote like elements and wherein:

FIG. **1** is a plan view illustrating the preferred embodiment of the restoration method of the present invention;

FIG. **2** is a sectional view illustrating the restoration method of the present invention;

FIG. **3** is a perspective view illustrating the restoration method of the present invention;

FIG. **4** is a fragmentary schematic plan view showing the use of flow controls in the dikes;

FIG. **5** is a sectional view illustrating the restoration method of the present invention;

FIG. **6** is a sectional view illustrating the restoration method of the present invention; and

FIG. **7** is a sectional view illustrating the restoration method of the present invention.

DETAILED DESCRIPTION OF THE INVENTION

In FIGS. **1-2**, a saline lake **10** is shown that has a shoreline **11**. However, it should be understood that FIG. **1** is illustrative and not to scale. The saline lake **10** can be a lake that receives inflow from one or more influent streams **12**, **13**, **14**. The method and apparatus of the present invention can be used to restore an existing saline lake such as the Salton Sea located in Southern California. In FIG. **1**, each influent steams **12**, **13**, **14** is provided with an arrow **15**, **16**, **17** respectively that indicates the direction of flow.

The influent streams **12**, **13**, **14** can be existing rivers. A lake that is receiving an influent stream, influent streams, or an influent flow containing salt can increase in salinity. This problem is compounded if the lake does not have an outflow as is the case with the Salton Sea. If there is no outflow, as water flows from the influent streams **12**, **13**, **14** into the lake **10**, the only way for the water to escape from the lake **10** is by evaporation. Evaporation results in a concentration of salt within the sea **10** raising levels of salinity. Increased salinity can threaten the ecosystem if those levels become too high for the animals and plants of the lake ecosystem. In the case of the Salton Sea, there are other (human) demands for water that flows in the influent streams **12**, **13**, **14**, possibly diverting all or part of that water. Water districts want the influent water or streams **12**, **13**, **14** for city use near the Salton Sea.

The method of the present invention solves the problem of restoring the lake **10** by creating a number of smaller lakes or smaller lake sections **22**, **23**, **24**, **25**. Each lake section **22**, **23**, **24**, **25** is capable of having a different level of salinity. Each is capable of functioning as a separate ecosystem for sustaining plant and animal life based on the salinity of the particular smaller lake section **22**, **23**, **24** or **25**.

In accordance with the method of the present invention, the saline lake **10** is divided into a number of smaller lake sections **22**, **23**, **24**, **25** using a plurality of levees or dikes. These dikes **18**, **19**, **20**, **21** are preferably concentrically placed. These levees or dikes include preferably an outer dike **18**, first inner dike **19**, second inner dike **20** and third inner dike **21**. It is possible to perform the method and apparatus of the present invention using more or fewer levees/dikes. At the central portion of the saline lake **10** (inside levee or dike **21**), there is provided one or more breathing brine areas **26**, **27**.

In FIGS. **2-4**, schematic illustrations show more particularly the construction detail for the plurality of dikes or levees **18**, **19**, **20**, **21** and the relative elevations of the dikes **18**, **19**, **20**, **21** and the smaller lake sections **22**, **23**, **24**, **25**. In FIGS. **1-2**, the saline lake **10** has a shoreline **11** that basically defines the periphery of the lake **10**. As part of the method of the present invention and as illustrated in FIGS. **2-3**, a first, smaller outer lake section **22** is formed in between shoreline **11** and a first dike or levee **18**. In FIG. **3**, this method is illustrated using a suction dredge **61**. The dredge **61** initially places geotextile tube **47** and fills it with available fill or sediment or other material that is available to the dredge **61**.

In FIG. **2**, the first smaller lake section **22** that is formed provides an outermost smaller lake section **22** that surrounds the remaining smaller lake sections **23-25** and a central breathing brine pond area or areas **26**, **27**. An interconnecting canal **69** can be used to enhance transmission of highly saline water between the ponds **26**, **27**. A siphon or siphons **70** can be used to transfer fluid between any river **12**, **13**, **14** and any selected lake **22**, **23**, **24**, **25** or pond **26**, **27**. As an example, siphon **70** enables water flow between lake **22** and the area **71** inside levee **21**. A siphon **70** can be used to connect areas preferably near the inflow (**12**, **13** or **14**) with relatively fresh water to the dry areas **71** around the brine areas **26**, **27** to facilitate irrigation (e.g. in view of dust control). Navigation locks **72** enable navigation between the lakes **22**, **23**, **24**, **25**. In between two lakes (e.g. **22**, **23**) with different water levels there should be at least one lock **72** to facilitate navigation. Thus, there would be provided at least three locks **72** needed to connect the four lakes **22**, **23**, **24**, **25**.

In FIG. **2** dimension "A" designated by the numeral **28** illustrates the distance that is spanned by the plurality of smaller lake sections **22**, **23**, **24**, **25**. In viewing FIG. **1**, it can be seen that this dimension "A" **28** will vary and can be determined by contour lines. The crest elevation of each dike or levee **18**, **19**, **20**, **21** will preferably be at a constant elevation for each particular dike or levee **18**, **19**, **20**, **21**.

In FIG. **2**, the outer dike **18** has a crest elevation **29** that can, for example, be −228 feet. This would be an elevation that would maintain a water surface elevation **33** of the outer, smaller lake section **22** of preferably about −230 feet, as an example.

Dike or levee **19** has a crest elevation **30** (e.g. −240) for maintaining a second smaller lake section **23** with a water surface elevation **34** of, for example, −242 feet. Dike or levee **20** provides a crest elevation **31** (e.g. −250 feet) for maintaining a third smaller lake section **24** having a water surface elevation **35** of, for example, −252 feet. Finally, dike or levee **32** has a crest elevation **30** of, for example, −260 feet for maintaining a fourth smaller lake section **25** with a water surface elevation **36** that can be about −262 feet, for example.

The breathing brine areas **26**, **27** have a brine area elevation **37** that is below the elevation of crest **30** of levee **32** such as, for example, about −270 feet. These elevations are merely exemplary, and are not deemed to limit the scope of the present invention.

FIGS. **5**, **6** and **7** show details of construction that can be used for the dikes or levees **18**, **19**, **20**, **21**. In FIG. **6**, a geotextile tube **38** can be filled with fill material **44** that is made available for suction dredge **61**. Fill material **44** can be pumped into geotextile tube **38**. After being filled with material **44**, the tube **38** can then be surrounded with additional fill material **39** to provide the dike or levee shape that is shown in FIG. **5**. For example, in FIG. **5**, the dike or levee **19** provides a crest **40**, upstream face **41**, and downstream face **42**. The main construction consists of many hundreds of miles of small low head dikes which is attractive in view of safety (compare to high head dams in seismic areas). Also the type of dike construction (e.g. geotube **47**) will enhance safety. Repetition of elements facilitates optimization and efficiency during the phased implementation.

In FIG. **6**, the dike or levee **18** represents the outermost dike or levee that would face homes, parks or the like that are located near the shoreline **11**. A beach fill material **46** can be applied at the upstream face **45** as shown in FIG. **6**. In FIG. **6**, a geotextile tube **47** is filled with pumped fill material **48** that can be pumped into the tube **47** using suction dredge **61**. The geotextile tube **47** can be surrounded with fill material **49** to provide a desired shape for the dike or levee **18**, providing a crest **51**, downstream face **50** and upstream face **45**. The levee **18** separates smaller lake section **22** from smaller lake section **23**.

FIG. **7** shows a spillway section **52** that could be provided to any one of or all of the dikes or levees **18**, **19**, **20**, **21**. The spillway section **52** has an upstream face **53**, downstream face **54**, and a concrete layer **55** that can be applied to the downstream face **54**. Geotextile tube **56** is filled with pumped fill material **57** using suction dredge **61**. Additional fill material

58 is placed around the filled geotextile tube 56 to provide a dike or levee shape having upstream face 53, crest 59, and downstream face 54. Arrows 60 in FIG. 8 indicates schematically the flow of water over spillway section 52 as an emergency flow controller in the event of heavy rain or like weather that increases dramatically the influent flow from influent sources such as streams 12, 13, 14 to lake 10.

Flow controllers 68 can be used to control the flow from one smaller lake section 22 to the following, downstream lake sections 23 or 24 or 25. A siphon 70 can be used to control the flow between the innermost smaller lake section 25 and the breathing brine areas 26, 27. Flow controllers 68 are schematically shown in FIG. 5 and can include any number of known flow controllers such as weirs, siphons, valves, pumping stations, lift stations, or the like.

The present invention thus provides a method of restoring a saline lake 10 by dividing the lake 10 into smaller lake sections 22, 23, 24, 25. Because the influent streams 12, 13, 14 flow first into an outer smaller lake section 22, flow control devices 68 allow water to flow to the next lake section 23 when the influent streams 12, 13, 14 have elevated the surface 33 of lake section 22 to a selected first elevation.

Water flows from the lake section 22 to the lake section 23. Similarly, the elevation 34 of lake section 23 is set using a weir or other flow controller 68. In this fashion, levees 18, 19, 20, 21 and flow controllers 68 such as weirs, or the like can be used to create a cascade effect wherein the elevations of the lake sections 22, 23, 24, 25 gradually decrease from the outermost lake section 22 to the innermost lake section 25. The flow controllers 68 are positioned to prevent short circuiting of flow (see arrows 43 in FIGS. 1 and 4). The breathing brine areas 26, 27 would have an elevation 37 that is lower than the elevation 36 or the innermost lake section 25. The dikes or levees 18, 19, 20, 21 as shown and described form the smaller lake sections 22, 23, 24, 25.

By maintaining selected water surface elevations 33, 34, 35, 36 for the lake sections 22, 23, 24, 25 the salinity gradually increases as water flows from the influent streams 12, 13, 14 to the outer smaller lake section 22, to the next lake section 23, then to the other lake sections 24, 25 in sequence and finally to the breathing brine areas 26, 27. The relatively fresh inflowing waters (12, 13, 14) will flow through the chain of lakes 22, 23, 24, 25. In each lake 22, 23, 24, 25 some water disappears by evaporation so for each lake it holds that the salinity of the outflow is higher than the salinity of the inflow. (This has nothing to do with evaporation time). At the end of this chain the salt waters will enter the brine ponds 26, 27. With the high laying inflow and low laying brine the flow through the lakes is under gravity (each downstream lake lies a little bit lower than the upstream one).

This system of a plurality of dikes 18, 19, 20, 21 and smaller lake sections 22, 23, 24, 25 ensures that each lake section 22, 23, 24, 25 can have a distinct ecosystem that is defined by the salinity of water contained. Similarly, the crest of each dike or levee 18, 19, 20, 21 can provide a land mass area that can grow vegetation that is compatible with the salinity level of the adjacent lake sections.

Each of the lake sections 22, 23, 24, 25 can be sized to support selected fisheries and marine life, or for certain water sport use (e.g. boating, sailing).

The following is a list of parts and materials suitable for use in the present invention.

PARTS LIST

Part Number	Description
10	saline lake
11	shoreline
12	influent stream
13	influent stream
14	influent stream
15	arrow
16	arrow
17	arrow
18	outer dike
19	first inner dike
20	second inner dike
21	third inner dike
22	smaller lake section
23	smaller lake section
24	smaller lake section
25	smaller lake section
26	breathing brine area
27	breathing brine area
28	dimension A
29	crest elevation
30	crest elevation
31	crest elevation
32	crest elevation
33	water surface elevation
34	water surface elevation
35	water surface elevation
36	water surface elevation
37	brine area elevation
38	geotextile tube
39	fill material
40	crest
41	upstream face
42	downstream face
43	arrow
44	pumped fill material
45	upstream face
46	beach fill material
47	geotextile tube
48	pumped fill material
49	fill material
50	downstream face
51	crest
52	spillway section
53	upstream face
54	downstream face
55	concrete layer
56	geotextile tube
57	pumped fill material
58	fill material
59	crest
60	arrow
61	suction dredge
62	arrow
63	suction line
64	discharge line
65	boom
66	arrow
67	fitting
68	flow controller
69	canal
70	siphon
71	area
72	navigation lock

All measurements disclosed herein are at standard temperature and pressure, at sea level on Earth, unless indicated otherwise. All materials used or intended to be used in a human being are biocompatible, unless indicated otherwise.

The foregoing embodiments are presented by way of example only; the scope of the present invention is to be limited only by the following claims.

The invention claimed is:

1. A method of restoration of a highly saline lake having a periphery, a water bottom, and an influent water source that enables water to be added to the lake, comprising the steps of:

a) forming a series of dikes that separate the highly saline lake into a plurality of smaller lakes, each having a water surface, the lakes including an outer lake that is next to the periphery and one or more inner lakes, each dike and each lake water surface having an elevation;

b) flowing water from the influent source to the outer lake;

c) flowing water from the outer lake to the inner lakes;

d) providing a breathing brine area that is surrounded by the smaller lakes;

e) flowing water from the inner lakes to the breathing brine area;

f) cascading water in steps "c" through "e" from one lake to another lake with simultaneous drops in elevation beginning at the outer lake, then to the inner lakes and then to the brathing brine area; and

g) gradually increasing the salinity of the water that flows in steps "c" through "f".

2. The method of claim 1 wherein the outer lake has a lower salinity level than the salinity of any of the inner lakes.

3. The method of claim 1 wherein there are at least two inner lakes.

4. The method of claim 1 wherein there are at least three inner lakes.

5. The method of claim 1 further comprising providing the breathing brine area at a position that is surrounded by all of the inner lakes.

6. The method of claim 5 further comprising maintaining in the breathing brine area some dry land.

7. The method of claim 5 further comprising maintaining in the breathing brine area a brine reservoir having some water with a high salinity that is higher than the salinity of at least one of the smaller lakes.

8. The method of claim 5 further comprising maintaining in the breathing brine area a brine reservoir having some water with a high salinity that is higher than the salinity of water in multiple of the smaller lakes.

9. The method of claim 1 wherein each dike has an upper average elevation, and the dikes have differing respective upper elevations.

10. The method of claim 9 wherein each dike that surrounds another dike has a greater upper average elevation than the dike it surrounds.

11. The method of claim 1 wherein the dikes are concentric.

12. The method of claim 11 wherein the smaller lakes have a total water volume that is about half the volume of the saline lake.

13. The method of claim 1 wherein the smaller lakes are concentric lakes.

14. A method of restoration of a saline lake having a periphery, a water bottom, and an influent water source that enables water to be added to the lake, comprising the steps of:

a) forming a series of dikes that separate the saline lake into a plurality of smaller lakes, each with a water surface, the lakes including an outer lake that is next to the periphery and one or more inner lakes, each dike and each lake water surface having an elevation;

b) enabling a water flow path that sequentially transmits water from the influent water source to the outer lake, to the inner lakes and then to a breathing brine area;

c) allowing salt to concentrate at the breathing brine area as water evaporates from the breathing brine area;

d) enabling water to at times accumulate in the breathing brine area, said water flowing to the breathing brine area at least in part from an inner lake;

e) concentrating the saline content of the water in steps "b" through "d" in greater concentrations as the water flows from the outer lake to the inner lake; and

f) cascading water in steps "c" through "e" from one lake to another lake with simultaneous drops in elevation from the outer lake to the inner lake to the breathing brine area.

15. The method of claim 14 wherein there are at least two inner lakes.

16. The method of claim 14 wherein there are at least three inner lakes.

17. The method of claim 14 further comprising providing the breathing brine area at a position that is surrounded by all of the inner lakes.

18. The method of claim 14 further comprising maintaining in the breathing brine area some dry land.

19. The method of claim 14 further comprising maintaining in the breathing brine area a brine reservoir having some water with a high salinity that is higher than the salinity of one of the smaller lakes.

20. The method of claim 14 further comprising maintaining in the breathing brine area a brine reservoir having some water with a high salinity that is higher than the salinity of water in multiple of the smaller lakes.

21. The method of claim 14 wherein each dike has an upper average elevation, and the dikes have differing respective upper elevations.

22. The method of claim 14 wherein each dike that surrounds another dike has a greater upper average elevations.

23. The method of claim 14 wherein the dikes are concentric.

24. The method of claim 14 wherein the smaller lakes are concentric lakes.

25. The method of claim 14 wherein the smaller lakes have a total water volume that is about half the volume of the saline lake.

26. A method of restoring a lake that has an influent flow stream of a first volume and an effluent flow stream that is smaller than the first volume so that the salinity of the lake is increasing over time, comprising the steps of:

a) dividing the lake into a plurality of lake sections using dikes as dividers;

b) providing a water flow course from a first lake section to a second lake section;

c) wherein in step "b", the water cascades from higher to lower elevations;

d) after step "b", transmitting water from the second lake section to a breathing brine section wherein water evaporates, leaving brine in the brine section; and

e) wherein the salinity of water flowing in steps "b" through "d" gradually increases in salinity.

27. The method of claim 26 wherein there are at least two inner lakes.

28. The method of claim 26 wherein there are at least three inner lakes.

29. The method of claim 26 further comprising providing the breathing brine area at a position that is surrounded by all of the inner lakes.

30. The method of claim 26 further comprising maintaining in the breathing brine area some dry land.

31. The method of claim 26 further comprising maintaining in the breathing brine area a brine reservoir having some water with a high salinity that is higher than the salinity of at least one of the smaller lakes.

32. The method of claim **26** wherein each dike has an upper average elevation, and the dikes have differing respective upper elevations.

33. The method of claim **26** wherein each dike that surrounds another dike has a greater upper average elevation than the dike it surrounds.

34. The method of claim **26** wherein the dikes are concentric.

35. The method of claim **26** wherein the smaller lakes have a total water volume that is about half the volume of the saline lake.

36. A method of restoration of a highly saline lake having a periphery, a water bottom, and an influent water source that enables water to be added to the lake, comprising the steps of:

a) forming a series of dikes that separate the highly saline lake into a plurality of smaller lakes, each having a water surface, the lakes including an outer lake that is next to the periphery and one or more inner lakes, each dike and each lake water surface having an elevation;

b) flowing water from the influent source to the outer lake;

c) flowing water from the outer lake to the inner lakes;

d) providing a breathing brine area that is surrounded by the smaller lakes;

e) flowing water from the inner lakes to the breathing brine area;

f) cascading water in steps "c" through "e" from one lake to another lake of higher elevation with drops in elevation beginning at the outer lake, then to the inner lakes having a median elevation lower than the outer lake higher elevation and then to the brathing brine area having a lower elevation that is lower than the median elevation; and

g) gradually increasing the salinity of the water that flows in steps "c" through "f".

37. The method of claim **36** wherein the outer lake has a lower salinity level than the salinity of any of the inner lakes.

38. The method of claim **36** wherein there are at least two inner lakes.

39. The method of claim **36** wherein there are at least three inner lakes.

40. The method of claim **36** further comprising providing the breathing brine area at a position that is surrounded by all of the inner lakes.

41. The method of claim **36** further comprising maintaining in the breathing brine area some dry land.

42. The method of claim **36** further comprising maintaining in the breathing brine area a brine reservoir having some water with a high salinity that is higher than the salinity of at least one of the smaller lakes.

43. The method of claim **36** further comprising maintaining in the breathing brine area a brine reservoir having some water with a high salinity that is higher than the salinity of water in multiple of the smaller lakes.

44. The method of claim **36** wherein each dike has an upper average elevation, and the dikes have differing respective upper elevations.

45. The method of claim **44** wherein each dike that surrounds another dike has a greater upper average elevation than the dike it surrounds.

46. The method of claim **36** wherein the dikes are concentric.

47. The method of claim **46** wherein the smaller lakes have a total water volume that is about half the volume of the saline lake.

48. The method of claim **36** wherein the smaller lakes are concentric lakes.

* * * * *

MWD
METROPOLITAN WATER DISTRICT OF SOUTHERN CALIFORNIA

Office of the General Counsel

February 8, 2005

Patrick J. Maloney
Law Offices of Patrick J. Maloney
2425 Webb Ave., Suite 100
Alameda, CA 94501

Dear Mr. Maloney:

Thank you for your February 1, 2005 letter regarding a "Non-admissibility Agreement" for Salton Sea Restoration discussions between Metropolitan Water District of Southern California (Metropolitan) and your clients. I have passed on your suggestion to Jeff Kightlinger, as per your request.

Metropolitan is participating in, and supports, the Salton Sea Restoration process now underway. Metropolitan believes that the best way to proceed with that Salton Sea Restoration process is with public disclosure and transparency rather than through confidential discussions among a few parties. Consequently, Metropolitan does not believe it is appropriate to enter into a "Non-admissibility Agreement" with your clients at this time.

Sincerely,

Linus Masouredis

Linus Masouredis
Deputy General Counsel

cc: Jeff Kightlinger, General Counsel

S:\LinMas\2-8-05 Letter to Patrick Maloney.doc

700 N. Alameda Street, Los Angeles, California 90012 • Mailing Address: Box 54153, Los Angeles, California 90054-0153 • Telephone (213) 217-6000

LAW OFFICES OF
PATRICK J. MALONEY

2425 WEBB AVENUE, SUITE 100
ALAMEDA ISLAND, CALIFORNIA 94501-2922

PATRICK J. "MIKE" MALONEY (510) 521-4575 THOMAS S. VIRSIK
FAX (510) 521-4623
e-mail: PJMLAW@pacbell.net

Via email to Clerk of the Board commentletters@waterboards.ca.gov
June 28, 2014

State Water Resources Control Board
1001 I Street
Sacramento, CA 95812
Attention: Clerk of the Board

Re: Agenda Item 5 – Emergency Regulations
SWRCB BOARD MEETING/HEARING
Tuesday, July 1, 2014 – 9:00 a.m.
Wednesday, July 2, 2014 – 9:00 a.m.

Dear Clerk:

The Law Office of Patrick J. Maloney (the Law Firm) is providing the within public comments on the proposed Emergency Regulations (Regulations or Regs) being considered by the State Water Resources Control Board (SWRCB or the Board). Please note that the comments are not filed on behalf of any specific current, past, or potential client nor is this letter intended to request relief with respect to any pending or past matter. While the below comments refer to actual proceedings, persons, policy, documents, and contents of public files, the references are used for illustration and policy discussion purposes only. The examples have been selected in part because (1) the Law Firm is intimately familiar with the matters and (2) they do not relate to the basins presently subject to curtailment.

Statement of Support

Broadly speaking, the Law Firm supports the policy behind the Regulations. The Law Firm was one of a set of voices over a decade ago that advocated for a rational and comprehensive modification of the California water rights system based on reasonable use, erasing legal distinctions not based in verifiable science (such as treating ground and surface water separately), utilizing contemporary technology to strategically approach water management, greater emphasis on the Statements of Water Diversions, and market dynamics. The Regulations – and general direction of this Board in the recent past -- are broadly consistent with the

approaches the Law Firm advocated in 2002. It remains important to have a definable water entitlement subject to drought impacts to support the stability of property ownership across California. The advocacy in 2002 was based on well-reasoned existing authority rather than any unique insights, which authority remains authoritative today. See Light v. State Water Resources Control Board, 2014 WL 2724856 (Cal.App. 1st, June 16, 2014), relying on In re Waters of Long Valley Creek Stream System (1979) 25 Cal.3d 339 and People ex rel. State Water Resources Control Bd. v. Forni (1976) 54 Cal.App.3d 743.

Cautionary Note on a Lack of a Clean Slate

The Regulations are based on certain implicit assumptions. First, the Regs assume that the eWRIMS system is accurate and reliable and thus can be used as a primary tool for calculation and notice purposes. Reg § 875(c)(1) and (2); (d). Another assumption is that prior Board policy was consistent with current Board policy, thus all filers and water rights participants are on a level playing field. Neither assumption is entirely accurate. The Board is not starting from a clean slate and should be aware that the present array of filings and information under its control arises from varying circumstances and at times was highly influenced by policies antithetical to the current policies underling the Regulations. Our suggestion is to craft a regulation that recognizes and provides a means to correct past Board anomalies instead of relying on the present unique means of seeking reconsideration at the Board level when a past application of (now contradictory) policy or some other error not the responsibility of the water user/diverter creates prejudice during a curtailment event. Reg. 875(f) (curtailment orders subject to reconsideration at Board level pursuant to petition process).

Regulations Explain Critical Role of Priority and Role of Statements of Water Diversion

The record in support of the Regulation contains an explanation of the current law of and Board policy about the Water Rights system, including an explanation of the role and processing of the Statements of Water Diversion. Digest, pages 5 et seq. These explanations include a discussion of how senior appropriative water rights may trump junior ones and thus more senior water rights holders are more likely to receive water in times of shortage. Page 6. Such statements are black letter law and presumably uncontroversial on their face. A key resource used to track such senior rights are the Statements of Water Diversion that are to be filed by the vast majority of users/diverters. Page 11. The Law Firm has assisted clients in filing 100's of such Statements. In the past there existed Board policy hurdles to some of the filings as well as unexplained delays that may prejudice filers in the absence of a method to formally work through such anomalies ahead of (or parallel to) any curtailment orders or processes.

Examples From Two Non-curtailed Areas

To concretely illustrate several of the potentially prejudicial past dynamics in the filing system and why the Regs need a method to address past practices, the Law Firm will point to two separate Statement filing anomalies, one relating to the Salinas Valley and the other to the Imperial Valley.

With respect to the Salinas Valley, the Law Firm submitted 100's of Statements for diverters starting in the late 1990's. The Law Firm has continued to update some, while in other instances (former) clients chose to take over that responsibility. But for reasons unknown to the Law Firm, a small but not inconsequential array of submitted Statements remained unfiled for years, with the most extreme for over a decade. Much correspondence (calls, etc.) was exchanged over the years to effect processing, with incomplete results. According to eWRIMS, the last of the early 2000's Statements were entered in the database and assigned numbers within the last year. Compare in eWRIMS, timely filing of S015562 with late filing of S022475 (both submitted March 2002, yet 10,000 Statement numbers apart). No explanation was provided or notice that the late filing had occurred, other than the annual supplemental filing demand (which triggered the eWRIMS inquiry and discovery of the recent filing). There is nothing suggesting that the very tardily processed Statements were unique, suspect, or anything other than routine (for the Salinas Valley). Given the peculiar timing, the burden is now on the filer of the timely filed but tardily processed Statement(s) to catch up on a decade of supplemental filings. Thankfully, there is no curtailment proceeding with respect to the Salinas Valley so a delay of even a decade need not prejudice the filers so long as adequate opportunity is allowed for supplemental filings to be added to the database and relate back to the original time periods. No prejudice appears at the moment for the subject Salinas Valley filings. But had the same situation occurred in one of the curtailed basins, the only remedy would be to petition for reconsideration of a curtailment order directed to the aggrieved filer and convince the Board of the inequity of imposing prejudice due to events out of the filer's hands. A simple administrative error or oversight can only be addressed by a formal petition to the Board, per the proposed Regs.

The second example comes from the Imperial Valley and is not on its face a function of error or unexplained delay, but Board policy. Statements of Water Diversion based principally on pre-1914 rights were submitted in 2006 and according to public documents, five years later they were all still sitting unprocessed in a staff office, awaiting an executive decision. See enclosed email. The final decision apparently was made in November 2012 to not process the Statements. See enclosed November 13, 2012 letter.[1] The policy on which the 2012 decision relies is contrary to the policy about water rights and the role of Statements of Water Diversion posted in support of the Regs. The policy of the Board has radically shifted between 2012 and now.

In 2012 the Board's policy with respect to Statements of Water Diversion included a comparison of the quantity of water being reported under various rights, rather than a comparison of the rights themselves. "The Division has received no information to document that the farmers divert water in excess of [the permit holder's] Permit 7643 at Imperial Dam." November 13, 2012 letter, first page. The current policy posted in support of the Regs, however, focuses on the priority of appropriative rights rather than the quantity of water, "As between appropriators,

[1] While there was litigation occurring on Imperial Valley water matters for over a decade and the permit holder asked the SWRCB to sanction the Law Firm for submitting the Statements, the written executive decision to reject all Imperial Valley Statements does not rely on or reference litigation or any litigation dynamic.

junior water rights holders may only divert when there is sufficient water to completely fulfill the needs of more senior appropriators." Digest, at page 6. The submitted Statements sought to protect the pre-1914 rights, rather than the permitted rights on which the permit holder already reports. Permit 7643. The Board has recognized that in the Imperial Valley, the permitted and pre-1914 rights exist side by side. WRO 2002-0013 (revised) at 3. By definition, the permit holder could only report on permit diversions, not pre-1914 ones. Nor did the permit holder choose to file Statements covering pre-1914 right diversions, which could have made the individual ones duplicative. Nevertheless, Board policy firmly rejected any and all Statements reporting on pre-1914 rights. The November 13, 2012 letter is based on prior policy that seemingly did not rely on the priority distinctions the present Reg background explains, where the priority of the right is key to how curtailment functions. Digest, at page 6.

Like the Salinas Valley example, had curtailment commenced in the Imperial Valley, the prior policy and rejection of the proffered Statements would have left the filers with nothing in eWRIMS showing their claim of use of pre-1914 rights so as to avoid curtailment of seemingly (and falsely) junior rights. Again, an aggrieved putative filer would have no option but to seek reconsideration based on the material shift in policy at the Board.

Other Policy Issues on Statements of Water Diversion

The Law Firm also supports the expansion of the use of Statements to report what is now known as groundwater, albeit such modifications may occur as part of the process presently in place on groundwater management. As part of any data collection process (via the Statements or otherwise), the State should no longer allow individual counties or water districts the right to determine the nature of the water right and especially what data is going to be made public. The Board has under prior policy deferred substantially to individual agencies about what water information that agency chooses to make public. For example, in 2000, the Board quashed subpoenas for certain water data in the hands of the Monterey County Water Resources Agency (MCWRA) because that local agency desired information be kept private. "The protestants have not demonstrated that their need for the personally identifiable information outweighs the need of the MCWRA to keep this information confidential." July 6, 2000 Order Quashing Subpoena, Application 30532, at fourth (unnumbered) page, a copy of which is enclosed. Public policy analysis, however, shows that reduced confidentially would result in net gains to the State. Letter and submission by Dr. Peter Reinelt, Chair, Department of Economics, SUNY Fredonia, February 26, 2014 (originally submitted for SWRCB Immediate Drought Response Options workshop), enclosed.

In addition, to the extent that the Board chooses to articulate current policy about Statements of Water Diversion in this era of curtailment, the Law Firm suggests that the Board articulate a liberal standard on the ground that more information is better than less or none at all. The Imperial Valley Statements rejected by the Board could have been available to provide greater and more detailed information about water use in that region, which could assist the Board if/when it is called to exercise its continuing jurisdiction over water dynamics in that region. WRO 2002-0013 (revised).

Thank you for allowing the Law Firm to provide comments on an important public matter with long-term strategic implications to the future of the State.

Sincerely,

Thomas S. Virsik

Thomas S. Virsik

Encl.
April 2, 2002 Summary of Position of Sax Report
November 12, 2012 letter re Imperial Valley Statements
September 28, 2011 email re Maloney documents
July 6, 2000 Order Quashing Subpoena, Application 30532
February 26, 2014 Letter and submission by Dr. Peter Reinelt, Chair, Department of Economics, SUNY Fredonia

LAW OFFICES OF
PATRICK J. MALONEY

2425 WEBB AVENUE, SUITE 100
ALAMEDA ISLAND, CALIFORNIA 94501-2922

PATRICK J. "MIKE" MALONEY
THOMAS S. VIRSIK

(510) 521-4575
FAX (510) 521-4623
San Francisco (415) 512-0406
e-mail: PJMLAW@pacbell.net

JOHN F. HANSON, JR.
OF COUNSEL

April 2, 2002

Paul Murphey
Division of Water Rights
SWRCB
Sacramento, California

Re: Workshop on Professor Sax's Report
SWRCB No. 0-076-300-0
April 10, 2002

Dear Mr. Murphey:

Professor Sax's Report is a significant document. The SWRCB should pay particular attention to Chapters V and VI. The solutions Professor Sax proposes in these two Chapters are important to water issues in the state and are particularly important to California's economy over the next fifty years. Our comments on the Report are divided into the following categories:

A. Background
B. Responses to the Questions Posed by the Board
C. People v. Forni
D. Indefinite Nature of California Water Rights
E. Existing Statutory structure

Background

Over the last thirty years lawyers in our Office have been involved in a number of different water issues in the State of California:

1>Developed the arguments and positions at the SWRCB on behalf of private clients which ultimately became People v. Forni.

2>Represented major landowners throughout California and Nevada.

3>Represented major financial institutions with concerns about their investments in California because of the water issue.

4>Co-Authored an article entitled "Restructuring America's Water Systems" published by the Reason Foundation. Neal, Kathy, Patrick J. Maloney, Jonas A. Marson and Tamer E. Francis, Restructuring America's Water Industry: Comparing Investor-Owned and Government-Owned Water Systems, Jan. 1996 (Reason Foundation, Policy Study No. 200). Many people see this article as an argument for privatization of the water delivery system in America. Morgan, Steven P. and Jeffrey I. Chapman, Issues Surrounding the Privatization of Public Water Service, Sept. 1996 (ACWA). The word "privatization" does not appear in the article. The article has received extensive criticism from organizations like ACWA, but the Reason Foundation article suggests public policy makers should rethink how water is distributed and managed in America and California in particular. The article has been purchased and studied by most significant water interests in the world including but not limited to financial institutions, water purveyors, engineering firms, and think tanks.

5>Developed the Instadjudicator. This is an interactive database that instantly determines a landowner's water rights or water entitlement in the Salinas Valley. The interactive database uses public source inputs such as chains of title, the APN system, assessor map overlays, County and State publicly available databases, defined engineering terms, the results of computer runs from the Salinas Valley Integrated Ground and Surface Water Model and other non-proprietary information. The utility of such a tool is to (1) quickly develop "what if" scenarios, and (2) to identify anomalous or skewed inputs or uses, e.g., identify by inferring from multiple sources that water use in a section of the analyzed area is substantially higher than the surrounding areas viz. unreasonable. We are not suggesting that the Instadjudicator is the only solution to the State's water issues but what is needed is a similar tool for all over-drafted (and ultimately all) basins so there can be a critical analysis of a Basin's water issues and "what if" scenarios can be quickly understood.

Engineers involved in the Mojave case have reviewed the operation of the Instajudicator and suggested its use would hasten the resolution of the Mojave case. The Instadjudicator was offered to the SWRCB with appropriate technical assistance for its use but the offer was rejected. At a contested hearing the

SWRCB refused to force the Monterey County Water Resources Agency to release data by which the instant adjudication of the Salinas Valley could be accomplished. Hearing on Motion to Quash Subpoenas, 6/28/00, Application 30532. A staff member of the SWRCB has suggested there are two problems with the Instadjudicator: A) The name and B) that this office developed it.

6>The office is currently working on an analysis of the leadership in the Water and Sewer industry with prominent People of Color. The purpose of this analysis is to compare the existing leadership of the water industry against the demographic make-up of the State now and forty years from now. The preliminary results of this research indicate that the California's water industry is not reflective of the ethnic demographic make-up of the State now or forty years from now.

Responses to the Questions Posed by the Board

Professor Sax proposes quantifiable criteria by which the water user could determine whether or not it is pumping percolating groundwater. The first problem with the proposed criteria is that they will involve more engineers arguing arcane hydrologic issues. These arcane hydrological issues are irrelevant if there is an unreasonable use of water. More importantly the percolating groundwater and underground surface water classification will change depending on what crop is used and how much water is being pumped in a given basin. What these criteria do is add further confusion rather than bring more definability to water usage in California. From time to time or place to place making the fine distinctions advanced by Professor Sax may be necessary, but only as a component of an overall solution-oriented water management system, not as the starting point. Making the management of California water more complex is not in the State's interest.

People v. Forni

Over thirty years ago adjudication was proposed for the Napa Valley and our vineyard clients decided adjudication would not solve the water problems caused by Frost Protection in the Napa Valley. The clients and their representatives instead worked closely with the staff of the SWRCB led by Ken Woodward, the former Chief of the Division of Water Rights, and the SWRCB to develop the principles which ultimately became People v. Forni. These principles and facts were presented in a highly contested hearing before the SWRCB. The arguments and the facts presented by our clients were the basis for the See decision and from

the See decision the SWRCB developed the regulation challenged in People v. Forni. People ex rel. SWRCB v. Forni (1976) 54 Cal.App.3rd 743; See Decision 1404. Our clients presented these positions because they felt the only way a system for Frost Protection could be developed was if all water sources in the water basin were considered and managed. Under the far-sighted leadership of Chairman Adams and Members Robie and Auer the SWRCB used its Sections 100 and 275 powers and brought stability to the region's water problems and allowed the Napa Valley to prosper. The lesson the SWRCB can learn from Forni is that once it develops a carefully reasoned engineering position it should take an active role in solving a region's water problem before the problem becomes a crisis.

For the last five years another set of clients have advocated a similar solution, the application of Sections 100 and 275 powers to the Salinas Valley's salt water intrusion and nitrate problems and the SWRCB has repeatedly rejected our clients' pleas. The current Chief of the Division of Water Rights has opposed the use of Sections 100 and 275 powers by the SWRCB because "initiating an unreasonable use proceeding would be viewed by the local agency as a 'blind-side' attack, and would probably be considered a back-door adjudication by the agricultural community. Nevertheless, if other efforts fail, this type of action would be preferred over an adjudication because the SWRCB could address administratively rather that in a judicial proceeding in superior court." (Confidential) Memorandum from Harry Schueller on Salinas Valley, June 16, 2000, page 8. The SWRCB's inaction has put in jeopardy the water supply of a major city in California and will likely cost the taxpayers (State and/or local) tens or hundreds of millions of dollars that could have been avoided by forcing a certain limited segment of the agricultural community to use water reasonably in the first place. The SWRCB has the power to solve water problems in this State and most of the issues raised in Professor Sax's Report. It must use the power and not worry about offending local water agencies or limited segments of the agricultural community.

Indefinite Nature of California Water Rights

No one really knows who has water rights in California. All water licenses are subject to vested rights. What those vested rights are is anybody's guess. Probably the most interesting statement made in Professor Sax's Report is found in footnote 122 wherein he cites In re Waters of Long Valley for the proposition that there is no such thing as unexercised riparian water rights in California. Long Valley probably does not say that, but the point is there is no water right in

California if the actual or contemplated water use is unreasonable. The Sax Report is full of references to cases by various California courts over the last century, which apply the reasonableness test to solve a water problem. There are no absolute water rights. A water right disappears in California when the needs of the community demand it.

The most disturbing problem we have in California water issues is that the SWRCB cannot figure out what its position is on most issues and the underflow issue is just a manifestation of the problem. We have staff letters of the SWRCB and Licenses telling the public that certain water rights exist yet frequently in public hearings of all types we have representatives of the SWRCB or other agencies of the State denying the validity of SWRCB's earlier positions. The SWRCB looks like a fool. To the outside world the State of California looks like a fool. In earlier times California could do whatever it pleased. Now, however, we have few major banks or financial institutions left in California and in order to maintain financing for our homes, agriculture and industries we must bring some order and discipline to the State's water system. We have to have more definability in our water system. We cannot reject definability merely because it upsets the sensitivities of certain water agencies or members of the agricultural community. The magic of People v. Forni and other things done in the Napa Valley to define water rights and optimize the region's water resources brought confidence to the investing and lending institutions and helped spur the development of California's wine industry.

Existing Statutory Structure and Actions of the SWRCB

Professor Sax's Report fails to recognize how much the Legislature and the SWRCB has actually done to solve the State's water problem. We direct the SWRCB's attention to Water Code Sections 5100 et seq. and 1010 et seq. and the forms prepared by the SWRCB. STATEMENT (1-00) and ST-SUPPL (2-01). No one knows exactly how to fill out the forms because of the SWRCB's inability to define underflow and consumptive use but at least there is a form. SWRCB has expanded the Section 5100 form dramatically in recent years without legislative approval. The forms should be expanded administratively to require water users to report all types of water sources and use. If the SWRCB does this administratively, there will be no need for the legislative action feared by Professor Sax. Once the forms are filed the data should be put into the existing publicly accessible SWRCB databases defined by USGS basin lines. Then Computer tools

should be developed for each water basin such as an "integrated groundwater and surface water model" throughout the State by which anyone could easily ascertain a reasonable use of water for a given basin.

Such a system would encourage conservation and the orderly transfer of water. Either the SWRCB or somebody else could then stop anybody who is unreasonably using water pursuant to Water Code Sections 100 and 275. Anybody who is using less than a reasonable amount water could transfer water to somebody who has a need for the conserved water. Then the State's water argument will be over reasonable use of water in any given basin not over the application of unclear laws to disputed hydrological facts.

Ultimately if the expanded Section 5100 form is not filled out and filed by a water user, the Legislature could develop legislation establishing a presumption the water user forfeits whatever water rights it has unless the water user can demonstrate good cause for not filing the form. Notwithstanding much of the uncertainty about the present filing system, this office has been active in filing reports for its various clients, relying on various public sources to explain and detail positions where the SWRCB has not provided clarity. This office understands the system to be akin to recording ownership of real property. In other words, if a water user declines to follow the statute and does not file, its claim will be entitled to less weight than any competing claim of a water user who followed procedures and filed reports – similar to that of a property owner who takes title but does not record it. Water users also file Statements with the expectation that this State database will be used by EIR preparers to catalogue and analyze water rights for a given project. Save Our Peninsula Committee v. Monterey County Board of Supervisors (2001) 87 Cal.App.4th 99, 122; Petition for Extension of Time for Permit 5882 (Application 10216) (1999).

California's computer industry deals with much more complex than the State's water issues. The SWRCB should rely on this industry for solutions. The SWRCB's existing data system on water rights should be modified to make all pumping data publicly available and a system of inquiry developed so the public can ascertain a reasonable water use standard for each basin.

Conclusion

The Sax Report offers important statutory history. The SWRCB should carefully consider the Report's generalized recommendations and develop an action plan to pursue the goal of a more defined system of water rights. This will ultimately lead to an overall solution-oriented water management system.

Very truly yours,

Patrick J. Maloney

CALIFORNIA
Water Boards

EDMUND G. BROWN JR.
GOVERNOR

MATTHEW RODRIQUEZ
SECRETARY FOR
ENVIRONMENTAL PROTECTION

State Water Resources Control Board

NOV 13 2012

In Reply Refer
To:KDM:~~A007482~~ incorrect
266.001
Maloney/IID Statement

Mr. Thomas S. Virsik
Law Offices of Patrick J. Maloney
2425 Webb Avenue, Suite 100
Alameda Island, CA 94501-2922

Dear Mr. Virsik:

STATEMENTS OF WATER DIVERSION AND USE – COLORADO RIVER WATER USERS

This letter is regarding the Statements of Water Diversion and Use (statements) filed in 2006 on behalf of approximately 350 landowner/farmers in Imperial Valley who have a right to receive their water from the Imperial Irrigation District (IID).

The State Water Resources Control Board issued water right Permit No. 7643 to IID on January 6, 1950. Permit 7643 authorizes IID to divert a maximum of 10,000 cubic feet per second from the Colorado River from January 1st to December 31st of each year for irrigation and domestic use on 992,548 acres of land. IID diverts Colorado River water at Imperial Dam, thence into a canal system for distribution to its agricultural water users. IID also holds a pre-1914 appropriative water right and has a contract with the Secretary of Interior for the delivery of Colorado River water.

The statement filers are relying upon IID's pre-1914 right. California Water Code section 5101, subdivision (b) provides that a statement need not be filed if the diversion is covered by a permit. The statement filers receive water deliveries from IID, using IID facilities. The Division has received no information to document that the farmers divert water in excess of IID Permit 7643 at Imperial Dam. Thus, water diverted by IID at Imperial Dam under Permit 7643 to collectively serve its agricultural water customers need not be covered by statements filed by IID or others.

The statement filers filed the statements for water delivered from the IID canal system, stating that the turnouts are points of rediversion. Permit 7643 does not list any points of rediversion. Points of rediversion are not necessary in the permit because water diverted at Imperial Dam is

placed into a canal system and does not rejoin a stream system for subsequent rediversion from a surface stream.

Statements of water diversion and use are not required to be filed for the diversion of water from a water body other than a surface or subterranean stream. (See Wat. Code, §§ 5100, subd. (c), 5101.) The farm turnouts are not points of diversion within the meaning of the statute, nor are they points of rediversion. Also, as noted above, it appears that all of the water is accounted for in Permit 7643. Accordingly, the statements are not accepted. If you would like the statements returned to your firm, please advise the Division accordingly within 30 days of the date of this letter. After that date, the Division will destroy the statements in accordance with its records retention policy.

Katherine Mrowka is the senior staff person assigned to this matter. Ms. Mrowka can be contacted at (916) 341-5363 or by email at kmrowka@waterboards.ca.gov if you require further assistance. Written replies should be addressed as follows: State Water Resources, Division of Water Rights, Attn: Katherine Mrowka, P.O. Box 2000, Sacramento, CA 95812-2000.

Sincerely,

James W. Kassel

James W. Kassel, Assistant Deputy Director
Division of Water Rights

cc: Enclosed Mailing List

NOV 1 3 2012

Petition for Modification List -- not Statement of Water Diversion Mailing List

Mailing List

San Diego County Water Authority
Bradley J. Herema
Brownstein, Hyatt, Farber, Shreck
21 East Carrillo Street
Santa Barbara, CA 93101-2706
bherrema@bhfs.com

Imperial Irrigation District
c/o Mark Hattam
Allen Matkins Leck Gamble Mallory & Natsis
501 West Broadway, 15th Floor
San Diego, CA 92101
mhattam@allenmatkins.com

Howard Elmore
696 North 8th Street
Brawley, CA 92227

Infinity Thomson
P.O. Box 7
Denton, MT 59430

Quasar Z. Thomson
P.O. Box 7
Denton, MT 59430

Rodney Foster
3403 Casey Road
Brawley, CA 92227

Walter J. Holtz
Toni F. Holtz
102 Ralph Road
Imperial, CA 92251
retlaw48@hotmail.com

Mr. John Russell Jordan
1280 Main Street
Brawley, CA 92227
rustyjordan2001@yahoo.com

Mike Morgan
3949 Austin Road
Brawley, CA 92227
pirate@kelomar.com

Victor J. Thomson
P.O. Box 7
Denton, MT 59430

John Pfister
2495 E. Boyd Road
Brawley, CA 92227
mpfister@beamspeed.net

Barbara Pfister
2495 E. Boyd Road
Brawley, CA 92227
mpfister@beamspeed.net

Marianne Pfister
2495 E. Boyd Road
Brawley, CA 92227
mpfister@beamspeed.net

RWF Family Partners & FLG Family Partners
Foster Feed Yard Inc.
3403 Casey Road
Brawley, CA 92227

Barbara Evoy - Maloney Statements

From: Bob Rinker
To: Evoy, Barbara
Date: 9/28/2011 1:28 PM
Subject: Maloney Statements
CC: Sawyer, Andy
Attachments: Maloney Documents.PDF

Barbara,

I received the attached documentation from Patrick J Maloney. He is the gentleman that spoke at a recent Board session indicating to date we have not processed his statements. I still have all of the filings in a box in my cube [redacted]. The letter is addressed to you and cc's the Board members. Still need direction on what we are going to do with his statements and how to address him.

Thanks,

Bob Rinker
Division of Water Rights
Fee & Data Management Manager
(916) 322-3143
rrinker@waterboards.ca.gov

State Water Resources Control Board

Winston H. Hickox
Secretary for Environmental Protection

Executive Office
901 P Street • Sacramento, California 95814 • (916) 657-0941
Mailing Address: P.O. Box 100 • Sacramento, California 95812-0100
FAX (916) 657-0932 • Internet Address: http://www.swrcb.ca.gov

Gray Davis
Governor

July 6, 2000

TO: PERSONS TO EXCHANGE INFORMATION FOR HEARING ON APPLICATION 30532

ORDER QUASHING SUBPOENA OF CLIENTS OF MR. MALONEY

As part of an adjudicative proceeding on a water right application filed by the Monterey County Water Resources Agency (MCWRA), Application 30532, Mr. Patrick Maloney, attorney for a group of protestants which has been named "Salinas Valley Protestants," (protestants) issued a subpoena duces tecum (subpoena) to MCWRA. Two items that the protestants have requested that MCWRA produce pursuant to the subpoena are "all water extraction reports" (item 1) and "all water conservation reports" (item 2). MCWRA filed a Motion to Quash the Subpoena of Clients of Mr. Maloney (motion) as to items 1 and 2. MCWRA provided documents responsive to the other requests contained in the subpoena and they are not at issue in this motion.

A hearing was held on June 28, 2000, to provide an opportunity for the parties to present oral argument in accordance with Code of Civil Procedure section 1987.1. As hearing officer for the hearing on the motion and for the hearing on Application 30532 of MCWRA, I must resolve the motion. (Gov. Code, § 11450.30, subd. (b).) I read all briefs submitted prior to the hearing and I listened to the arguments given at the hearing.

Issues

MCWRA raises three issues in its motion:

1. The information requested in the subpoena is not relevant to the issues noticed for hearing on Application 30532.

2. The information requested in the subpoena is confidential by MCWRA ordinance 3717 and is protected by an outstanding order of the Monterey County Superior Court.

3. The subpoena is not valid because it was not served properly, not accompanied by a proof of service, and not accompanied by an affidavit.

Discussion

<u>Relevance</u>

MCWRA ordinance 3717 requires the annual reporting of groundwater extraction data and water conservation information on forms provided by MCWRA. The information reported is compiled in the MCWRA's Groundwater Extraction Management System (GEMS) database.

Pursuant to an order of the Monterey County Superior Court (Order on Motion to Compel Production of Well Extraction Data, *Orradre Ranch, et al. v. Monterey County Resources Agency*, No. 115777), Mr. Maloney has been given the water extraction data in the GEMS database aggregated by township and range without the personally identifiable portions. The court order does not address the conservation data.

The protestants contend that the groundwater extraction data and the water conservation data (items 1 and 2 in the subpoena) are relevant for four purposes:

1. To rebut MCWRA's water availability analysis;

2. To establish the protestants' conjunctive use of water in the Salinas Valley;

3. To "optimize" the water resources of the Salinas Valley; and

4. To determine how much water each person in the Salinas Valley should be allowed to pump.

The amount of water extracted from and conserved in the Salinas Valley groundwater basin may be relevant to the water availability issue noticed for the hearing on Application 30532. Water is not available for appropriation to the extent it deprives groundwater users of recharge on which they depend. The recharge serves groundwater extractors as a group, however, and it is the amount extracted in the aggregate – data that have already been made available to Mr. Maloney - not the amount extracted by any individual user, that is relevant to the inquiry. The personally identifiable portions of the reports in which extraction and conservation data are recorded are not relevant to any of the issues noticed for hearing.

The protestants contend that the subpoenaed data are needed as a matter of fundamental fairness to test the accuracy of the calculations, assumptions, and methodology used in MCWRA's water availability analysis. MCWRA developed and uses the Salinas Valley Integrated Groundwater and Surface water Model (SVIGSM) as a planning tool to analyze the hydrogeology of the Salinas Basin. MCWRA did not use the data in the GEMS database to develop or calibrate the SVIGSM. (Reply Brief, Exhibit A.) MCWRA did not use the GEMS database in developing its testimony, exhibits, or analysis for the hearing on Application 30532. (Reply Brief, Exhibit B.)

The protestants also contend that they need the subpoenaed information to establish their conjunctive use of water in the Salinas Valley. The protestants can use their own extraction and conservation data to show their use. The personally identifiable portions of the reports submitted by other groundwater users is not relevant to that issue.

The protestants contend that they need the subpoenaed information to enable the State Water Resources Control Board (SWRCB) to "optimize" the water resources of the Salinas Valley. The protestants contend that the SWRCB needs the subpoenaed information to develop a "rational solution" to the water problems in the the Salinas Valley. Neither optimizing the water resources of the Salinas Valley nor solving all of the water problems in the Salinas Valley is within the scope of the hearing on Application 30532. The purpose of the hearing on Application 30532 is to determine whether there is water available for the project described in the application. The subpoenaed information is not relevant to issues that are within the scope of the hearing.

The protestants contend that they need the subpoenaed information to determine how much water each person in the Salinas Valley should be allowed to pump. A determination of the amount of water each person should be allowed to pump would require an adjudication of the water rights of the Salinas Valley. An adjudication of water rights is outside the scope of the hearing and the subpoenaed information is not relevant to resolution of the issues noticed for the hearing on Application 30532.

The protestants have failed to establish the relevance of the subpoenaed information to the issues within the scope of the hearing.

Confidentiality

As described above, MCWRA ordinance 3717 requires the annual reporting of groundwater extraction data and water conservation information on forms provided by MCWRA. Section 1.01.13 of ordinance 3717 states that:

> "The Agency shall restrict access to and distribution of personally identifiable information consistent with privacy protections and requirements and trade secret protections."

Pumpers have relied on the confidentiality provision in complying with the ordinance. Without the confidentiality provision in the ordinance and promises of confidentiality made by MCWRA to the growers, it is doubtful that growers would submit the information. Many growers consider the information required to be submitted to be a trade secret. MCWRA needs the cooperation of the growers to get the information it needs to manage the water resources within its jurisdiction.

Section 1.01.02 of ordinance 3717 describes the purpose of the ordinance. The purpose includes:

1. Determine actual amounts of water extracted from the basin.

2. Provide information that can be used to develop demand management programs created by an inadequate water supply.

3. Facilitate and encourage water conservation by monitoring water use patterns and practices.

4. Facilitate the development of new water supplies by using the data collected to determine whether new water projects are necessary.

5. Allow MCWRA to allocate the costs of water management activities in the Salinas Basin and any new water projects for the basin, based on actual water use.

The success of MCWRA in managing the water resources within its jurisdiction depends on the cooperation of the pumpers in complying with ordinance 3717. Compliance with the ordinance depends on the promise to maintain the confidentiality of the information submitted. Without compliance, MCWRA is unable to use a valuable management tool. The protestants have not demonstrated that their need for the personally identifiable information outweighs the need of MCWRA to keep this information confidential.

The protestants contend that the SWRCB has waived the confidentiality of the subpoenaed data because it "ordered the Agency to craft a water availability analysis" and "[b]y ordering such an analysis to be placed into the public record, the Board has already determined that the confidentiality of water data is outweighed by the Board's statutory responsibility to determine whether water is available to the Agency." Neither statement is true. In fact, the SWRCB neither waived confidentiality nor made any determination as to whether other considerations outweighed the need to maintain confidentiality. SWRCB staff merely informed MCWRA, by letter dated March 26, 1999, that MCWRA must submit information that demonstrates a reasonable likelihood that unappropriated water is available for appropriation under Application 30532. There is no correspondence or any other documentation in the files to show that the SWRCB considered or made any determination regarding the confidentiality of data submitted pursuant to ordinance 3717.

Validity of Subpoena

MCWRA contends that the subpoena was not served properly, not accompanied by a proof of service, and not accompanied by an affidavit as required by law.

Government Code section 11450.20, subdivision (b), provides three ways to issue a subpoena: personal service, certified mail, and messenger. Messenger service was used to issue the subpoena. A copy of the written notation of acknowledgment of the subpoena, required by Government Code section 11450.20, subdivision (b), was not served on the parties or the SWRCB, but service of the acknowledgment is not required. MCWRA obviously received the subpoena. Failure to file proof of acknowledgment does not invalidate the subpoena. Proof of service of the subpoena was served on the SWRCB.

Code of Civil Procedure section 1985, subdivision (b), requires service of an affidavit with the subpoena. (See also Gov. Code, § 11450.20, subd. (a); 25 Cal.L.Rev.Comm. Reports 55 (1995).) The affidavit must include the following:

1. Show good cause for the production of the documents described in the subpoena.

2. Specify the exact documents requested to be produced.

3. Set forth in full detail the relevance of the desired documents to the issues noticed for hearing.

4. State that the MCWRA has the desired documents in its possession or under its control.

An affidavit was not served with the subpoena issued to MCWRA. Failure to serve the required affidavit at the time the subpoena is served invalidates the subpoena.

The protestants contend that an affidavit is not required and that the SWRCB's subpoena form allows a subpoena for documents without an affidavit. Contrary to the protestants' contention, the SWRCB's subpoena form provides notice of the necessity of an affidavit. (See SWRCB subpoena form at page 1, part 2 (a) and page 2, part 1.) The protestants cite Code of Civil Procedure sections 1985, subdividision (b), and 2020 as support for their contention that an affidavit is not required. The sections cited by the protestants do not support their contention.

Code of Civil Procedure section 1985, subdivision (b) requires an affidavit be served with a subpoena duces tecum. Subdivision (b) of section 1985 states: "A copy of an affidavit shall be served with a subpoena duces tecum issued before trial…" (emphasis added).

Code of Civil Procedure section 2020 does not apply to a subpoena duces tecum; it only applies to a deposition subpoena for the production of business records for copying. Section 2020 does not require service of an affidavit with the subpoena if the subpoena commands only the production of business records for copying. (Code Civ. Proc., § 2020, subd. (d)(1).) The subpoenaed information is not a business record because the water extraction reports and the water conservation reports were not prepared by MCWRA. (Evid. Code, § 1561, subd. (a)(3).) Accordingly, section 2020 does not apply.

The subpoena is not valid because Mr. Maloney failed to serve the required affidavit as required by Code of Civil Procedure section 1985, subdivision (b). Failure to provide the SWRCB and the parties with proof of service showing the manner of service does not invalidate the subpoena. Although failure to obtain the required written notation of acknowledgment may also call into question the validity of a subpoena, I do not believe the subpoena should be quashed on that basis, however, because there is no dispute regarding receipt of the subpoena and no indication that any party was prejudiced by the omission.

Conclusion

I find that:

1. The information requested in items 1 and 2 of the subpoena is not relevant to the issues noticed for the hearing on Application 30532.

2. The information requested in items 1 and 2 of the subpoena is confidential and should not be disclosed to the protestants.

3. The subpoena is not valid for failure to serve the affidavit required by Code of Civil Procedure section 1985, subdivision (b).

Accordingly, the motion to quash is granted. The subpoena is quashed as to items 1 and 2.

If you have any questions regarding my ruling, please contact Barbara Katz at (916) 657-2097.

Sincerely,

ORIGINAL SIGNED BY:

John W. Brown
Hearing Officer

cc: Barbara Katz, Esq.
Office of Chief Counsel
State Water Resources Control Board
901 P Street [95814]
P.O. Box 100
Sacramento, CA 95812-0100

Mr. Kevin Long
Mr. Mike Meinz
Division of Water Rights
State Water Resources Control Board
901 P Street [95814]
P.O. Box 2000
Sacramento, CA 95812-2000

List of Persons to Exchange Information

Monterey County Water Resources Agency Nacimiento Reservoir Hearing
July 18 and 19, 2000, to be continued if necessary, on July 24, 25 and 26, 2000
(dated June 6, 2000)

California Sportfishing Protection Alliance
c/o Mr. Robert J. Baiocchi
Consultant/Agent
P.O. Box 1790
Graeagle, CA 96103
Phone: (530) 836-1115
Fax: (530) 836-2062
E-mail: cspa@psln.com

Clark Colony Water Company
Rosenberg Family Ranch, LLC
c/o Mr. Alan B. Lilly
Bartkiewicz, Kronick & Shanahan
1011 Twenty-Second Street
Sacramento, CA 95816-4907
Phone: (916) 446-4254
Fax: (916) 446-4018
E-mail: abl@bkslawfirm.com

East Side Water Alliance
c/o Ms. Martha H. Lennihan
Lennihan Law
2311 Capitol Avenue
Sacramento, CA 95816
Phone: (916) 321-4460
Fax: (916) 321-4422
E-mail: mlennihan@lennihan.net

Marina Coast Water District
c/o Mr. Michael Armstrong
11 Reservation Rd
Marina, CA 93933
Phone: (831) 582-2604
Fax: (831) 384-2479
E-mail: marmstrong@mcwd.org

Monterey County Water Resources Agency
c/o Mr. Kevin O'Brien
Downey, Brand, Seymour & Rohwer, LLP
555 Capitol Mall, 10th Floor
Sacramento, CA 95814-4686
Phone: (916) 441-0131
Fax: (916) 441-4021
E-mail: kobrien@dbsr.com

National Marine Fisheries Service
c/o Mr. Steve Edmondson
777 Sonoma Avenue, Room 325
Santa Rosa, CA 95404
Phone: (707) 575-6080
Fax: (707) 578-3435
E-mail: Steve.Edmondson@noaa.gov

Salinas Valley Protestants
c/o Mr. Patrick J. Maloney
Law Offices of Patrick J. Maloney
2425 Webb Avenue, Suite 100
Alameda, CA 94501
Phone: (510) 521-4575
Fax: (510) 521-4623
E-mail: PJMLaw@pacbell.net

Salinas Valley Water Coalition
c/o Ms. Janet K. Goldsmith
Kronick, Moskovitz, Tiedemann & Girard
400 Capitol Mall, 27th Floor
Sacramento, CA 95814
Phone: (916) 321-4500
Fax: (916) 321-4555
E-mail: jgoldsmith@kmtg.com

City of San Luis Obispo
c/o Robert J. Saperstein
Hatch and Parent
P.O. Drawer 720
Santa Barbara, CA 93102-0720
Phone: (805) 963-7000
Fax: (805) 965-4333
E-mail: Rsaperstein@Hatchparent.com

Tanimura & Antle, Inc.
c/o Mr. Robert E. Donlan
Ellison & Schneider L.L.P.
2015 H Street
Sacramento, CA 95814
Phone: (916) 447-2166
Fax: (916) 447-3512
E-mail: red@eslawfirm.com

School of Business
Department of Economics

Dr. Peter Reinelt, Chair
Department of Economics
State University of New York
Fredonia, NY 14063

Tel. 716-673-3509
Fax 716-673-3332
Email: reinelt@fredonia.edu

Felicia Marcus, Chair
State Water Resources Control Board

Submission for: Public Workshop Regarding Immediate Drought Response Options
February 26, 2014
Sacramento, CA

Attached is my submission "Proposal to Abolish or Limit Water Data Confidentiality to 1-5 Years: Improving Water Resource Management and Increasing Net Water Benefits in the State of California" to the SWRCB for the Public Workshop Regarding Immediate Drought Response Options.

I am presently chair of the Department of Economics at the State University of New York at Fredonia. I have a Ph. D. in Agricultural and Resource Economics and a B.A. in Physics and Applied Mathematics from the University of California at Berkeley. I have researched and published on California water issues for 20 years starting with a 1995 publication "Alternatives for Managing Drought: A Comparative Cost Analysis" examining potential EBMUD demand and supply side responses after the last major drought in California. I have also published hydrologic-economic models on seawater intrusion into groundwater aquifers originally applied to the Salinas Valley. In 2012, I was the lead guest editor for a special issue of Hydrogeology Journal, the official journal of the International Association of Hydrogeologists, on the Economics of Groundwater Management, as well as co-authoring an overview paper on "Factors Determining the Economic Value of Groundwater".

I have also consulted on many water issues for the Law Offices of Patrick J. Maloney over the last 17 years including historical benefits of district operations, seawater intrusion, and district and project cost allocation and environmental impacts in the Salinas Valley, nitrate loading of groundwater in the Central Coast Region and water rights, beneficial use, conservation methods, Part 417 determination, Quantification Settlement Agreement and Salton Sea restoration in the Imperial Valley. My consulting economic analysis has always been aimed at optimal management of water resources through maximizing the net economic benefits of the state's scarce water resources. A common barrier to the analysis of optimal management in all locations has been local water agencies' claims of data confidentiality that prevent the release of data necessary for comprehensive review and independent development of hydrologic-economic models. The proposal submitted herewith presents a conceptual economic framework for a comprehensive review of the economics of water data confidentiality with the goal, in furtherance of both public and private interests, of improving water resource management and increasing net water benefits in the State of California.

Dr. Peter Reinelt, Chair
Department of Economics
SUNY Fredonia

Proposal to Abolish or Limit Water Data Confidentiality to 1-5 Years: Improving Water Resource Management and Increasing Net Water Benefits in the State of California

With water supplies constrained by prolonged drought and future climate change and with continuing population growth raising water demands, California faces a future of increasing water scarcity and attendant impacts on water quality. As water becomes more economically scarce, improvements in resource management will require greater integration of surface and groundwater supply quantity and quality, more extensive and accurate measurement of relevant water parameters, and storage of this critical information in comprehensive databases available to state planners, affiliated and independent researchers, and the public.

A recent report for the State Water Resource Control Board "Addressing Nitrate in California's Drinking Water" recognizes many of these issues and proposes a statewide groundwater data task force to solve them. The report concludes that "It is now critical that the state has a coherent and more forward-looking policy and technical capability for the collection and management of groundwater data"[1] based on the following assessment:

> Inconsistency and inaccessibility of data from multiple sources prevent effective and continuous assessment. A statewide effort is needed to integrate diverse water-related data collection activities by various state and local agencies. Throughout this study, we often faced insurmountable difficulties in gaining access to data already collected on groundwater and groundwater contamination by numerous local, state, and federal agencies. Inconsistencies in record keeping, labeling, and naming of well records make it difficult to combine information on the same well that exist in different databases or that were collected by different agencies. A statewide effort is needed to integrate diverse water-related data collection activities of various state and local agencies with a wide range of jurisdictions. Comprehensive integration, facilitation of data entry, and creation of clear protocols for providing confidentiality as needed are key characteristics of such an integrated database structure. (p. 74)

Extreme scarcity demands that the unexamined assumption of "confidentiality as needed" (regularly cited to grant an indefinite time period for water data confidentiality for some water users but not others) be thoroughly analyzed in light of the pressure on current water institutions and how they are likely to evolve. The benefits to society from accessible data, granting the ability to review water resource modeling and policy decisions, has routinely been dismissed or ignored at the local resource agency level. The State, with the development of the Electronic Water Rights Information Management System (eWRIMS), has created a foundation for water data reporting and public access, but the scope of information is inconsistent. Monthly surface water diversions and use are publicly available on eWRIMS for individual diverters reporting under Section 5101 of the Water Code, but the same information is not publicly available for other individual users that receive their water from a water purveyor. While water purveyors also report diversions under Section 5101, they are only required to report monthly aggregated farm-

[1] Harter, Thomas and Jay R. Lund et al. of Center for Watershed Sciences, "Addressing Nitrate in California's Drinking Water, With a Focus on Tulare Lake Basin and Salinas Valley Groundwater: Report for the State Water Resources Control Board Report to the Legislature, California Nitrate Project, Implementation of Senate Bill X2 1", January 2012.

gate delivery data under Section 531.10, rather than delivery data for each farm gate. Groundwater extractors in Los Angeles, Riverside, San Bernardino and Ventura Counties must report their groundwater extraction either with local water agencies or with the State. State-filed groundwater recordation appears on eWRIMS. Furthermore, many individual well extractors who cannot physically or legally distinguish between "percolating groundwater" and "underflow" also report quantities pumped that are accessible on eWRIMS.[2] The time has come for a comprehensive state-level review of water data confidentiality policies for all water end-users and water sources that considers the interests of all citizens.

Are there any business gains to protecting 20-year-old data? Does society benefit at all by protecting 20-year-old data? What is the public benefit of making water data available? Are there business losses associated with releasing this claimed "proprietary information"? Is water data confidentiality socially beneficial or should it be abolished? If not abolished, should it be conferred for a limited time frame?

Before continued acceptance of indefinite water data confidentiality, the potential societal tradeoffs from limiting confidentiality must be examined based on the physical and societal relationships embodied in individual water rights and how readily accessible data may produce societal gains through better public analysis, monitoring and transparency of the water institutions charged with managing extractive and non-extractive uses, thus leading to better performance, accountability, credibility and confidence in the integrity of laws governing water use. This proposal examines these issues with reference to existing emissions reporting requirements and the economic theory of patents. Specific water data that serve the public interest is identified for disclosure either contemporaneously or after a fixed time delay. Recommended water data disclosure is limited to that which is necessary for the public purpose and structured to allow other data to remain proprietary to mitigate private costs. Finally, adjustments in the method of gaining accessibility for some data are considered in light of water system security concerns.

Existing Environmental Reporting and Public Access to Data

Requirements to disclose data on some aspects of business operations that impacts public health and commerce and grant public access are not new. EPA has long required reporting of emissions and public access to data that affects public health, commerce, and the environment. "Most U.S. environmental laws require that self-reported data be made available to the public."[3] The SO_x and NO_x allowance trading programs collect hourly data.

> The accurate measurement and reporting of emissions is essential, along with the rigorous and consistent enforcement of penalties for fraud and noncompliance. Also critical is transparency,

[2] See discussion on interlinkages between surface water and groundwater in **"**Physical and Legal Relationship between Water Diversion/Extraction and Public Interest" section below, and footnote 9 references from that section for the nonexistence of an absolute technical or legal line that divides surface water flows from groundwater flows.

[3] International Network for Environmental Compliance and Enforcement, "Principles of Environmental Compliance and Enforcement Handbook", April 2009.

> such as public access to source-level emissions and allowance data. The coupling of stringent monitoring and reporting requirements and the power of the Internet makes it possible for EPA to provide access to complete, unrestricted data on trading, emissions, and compliance. This promotes public confidence in the environmental integrity of the program and business confidence in the financial integrity of the allowance market. It also provides an additional level of scrutiny to verify enforcement and encourage compliance. Finally, accountability requires ongoing evaluation of the cap and trade program to ensure that it is making progress toward achievement of its environmental goal.[4]

EPA's 1995 policy "Incentives for Self-Policing: Discovery, Disclosure, Correction and Prevention of Violations" further creates incentives for regulated firms to self report violations of hazardous waste limits.

Patents

In the simplest form of the economic theory of patents, the government confers a exclusive property right on an inventor for a limited period of time to encourage investment in innovation in cases where the innovation could be easily appropriated/duplicated and the innovator could not recoup the investment costs that lead to the innovation. Patents require that the applicant publicly disclose the innovation for future public use and limits the time frame of the monopoly property right with the purpose of offsetting societal loss from monopoly with societal gains from innovation, thereby increasing *societal* benefits over the course of time. While the patent right assigns greater gains to the inventor, its purpose is to increase innovation for society and societal well-being more generally.

Patents can have other effects besides inducing innovation. For example, patents can also be used as litigative barriers-to-entry and for rent seeking. Patents can impede follow-on innovation until expiration, but increase future innovation after the patent expires through information disclosure. Furthermore, if the investment leading to an innovation is small or the discovery would likely soon be independently duplicated without the inducement of a monopoly property right, then patent research demonstrates that long-lived patents are detrimental to societal well being. In those cases, granting a monopoly right to an inventor for a long period of time produces excessive private gains at a cost to society. Some recent research on the gains from patents suggests the optimal time limit may be quite small in many circumstances.[5]

Proprietary Information, Water Data Confidentiality and the Public Interest

Protection of trade secrets is an alternative method of promoting investment in innovation. Government does not force disclosure of proprietary information to force diffusion of the innovation and reduction of economics rents for the benefit society. However, acceptance of the assumption of indefinite water data confidentiality ignores the potential societal tradeoffs beyond that between the value of innovation and economic rents.

---

[4] EPA, "Cap and Trade Essentials", http://www.epa.gov/captrade/documents/ctessentials.pdf.

[5] See for example, Boldrin, Michele and David K. Levine, "The Case Against Patents", Journal of Economic Perspectives, 2013, and a critique by Gilbert, Richard "A World without Intellectual Property? A Review of Michele Boldrin and David Levine's Against Intellectual Monopoly", Journal of Econmic Literature, 2011.

Since agriculture is the largest sectoral water user in California, we discuss the societal tradeoffs in a farming context; however, the conceptual framework can be applied to other sectors. To examine those tradeoffs, we first analyze the physical and legal relationship between water diversion/extraction and the public interest, and then discuss the public values of dispensing with or limiting water data confidentiality in favor of public access. From this discussion we identify two potential subsets of individual farming unit water data whose release would foster the identified public benefits and thus improve water resource management. Finally, we discuss the potential impact on farming profits of releasing this data and how security of water system concerns might alter the proposal.

Physical and Legal Relationship between Water Diversion/Extraction and Public Interest

Both the physical properties of water flows and legal conventions governing its use only exist in relationship between the extractive user and other extractive users, which constitute the public at large, as well as in relationship to societal benefits from non-extractive uses and the public trust.

Groundwater extraction impacts both groundwater levels and stocks available for other extractors. Percolation beyond the root zone of water containing unused fertilizer and pesticide residues eventually impacts water quality of other extractors. The right to extract groundwater is a correlative right between landowners overlying an aquifer, a right always in relation to other landowners. In situ groundwater values include buffering periodic shortages of surface water supplies, subsidence avoidance, water-quality protection and prevention of seawater intrusion.[6] Natural groundwater discharge can also support natural environments and recreation.

Surface water diversions and return flows physically and legally impact junior right holders and the environment. While usufructuary water rights establish the right to use, they also establish a relationship to public ownership of water. Beneficial use is the foundation of western appropriative water rights: "beneficial use shall be the basis, the measure, and the limit of the right" echo many western state constitutions and water statutes.[7] As operatively defined in United States v. Alpine Land & Reservoir[8] beneficial use is a relational concept:

> There are two qualifications to what might be termed the general rule that water is beneficially used (in an accepted type of use such as irrigation) when it is usefully employed by the appropriator. First, the use cannot include any element of 'waste' which, among other things, precludes unreasonable transmission loss and use of cost-ineffective methods. Second, and often overlapping, the use cannot be 'unreasonable' considering alternative uses of the water.

[6] Qureshi, M., Andrew Reeson, Peter Reinelt, Nicholas Brosovic, Stuart Whitten, "Factors determining the economic value of groundwater", Economics of Groundwater Management issue of *Hydrogeology Journal*, International Association of Hydrogeologists, 2012.
[7] Weil, Samuel C., *Water Rights in the Western States*, 1911.
[8] United States v. Alpine Land & Reservoir Co., 697 F.2d. 851, 854 (9th Cir. 1983) (discussing the beneficial use requirement of Section 8 of the Reclamation Act of 1902), cert. denied, 464 U.S. 863 (1983).

Waste and alternative uses are relative to other extractive users and with respect to non-extractive environmental, recreational and navigational in-situ uses.

Furthermore, understanding groundwater surface-water interactions is critical for evaluating interlinkages between alternative extractive and non-extractive uses, as groundwater extraction can reduce surface flow and surface water extraction can reduce groundwater flows.[9]

The Public Interest for Publicly Accessible Water Data

Publicly accessible water data creates the following public benefits that apply to the management and administration of water rights, conservation agreements, water trades, pollutant loading and water quality.

1) Allows independent public review of water resource models to better manage existing resources (data available only to restricted club creates opportunities for mismanagement).
2) Accountability for water right holders, local water agencies and consultants.
3) Reporting data and making it publicly accessible encourages compliance with existing laws and regulations.
4) Public verification of compliance with water rights, pollutant loading, and water conservation achievements tied to water exchanges/trades.
5) Public vigilance of public trust elements of water rights including environmental uses.
6) Public confidence in the integrity of laws governing water use.
7) Transparency (discourages political rent seeking, discourages protecting administrative turf/principal-agent problem, and discourages inequitable favorable treatment by local water agencies)
8) Reduction in delay time of regulatory solutions (and the water supply and public health consequences of those delays) caused by those who use water data confidentiality as a barrier to development and implementation of socially beneficial regulation.
9) Reinforces mutual credibility between agricultural sector and M & I sector water users, strengthening mutual acceptance of voluntary or mandatory drought reductions.
10) More civic and democratic participation.

Examples from recent years illustrate some of these issues.

The Salinas Valley Integrated Ground and Surface Water Model (SVIGSM) has been used to model historical benefits of reservoir operations, analyze proposals to halt seawater intrusion, and apportion cost for water projects and district operations. The

[9] Moreover, there is no absolute technical or legal line that divides surface water flows from groundwater flows. For example, see section on "Myth: Groundwater is Separate from Surface Water" in Hanak, Ellen, Jay Lund et al., "Myths of California Water – Implications and Reality", *West Northwest*, 2010; and Sax, Joseph L., "Review of the Laws Establishing the SWRCB's Permitting Authority over Appropriations of Groundwater Classified as Subterranean Streams and The SWRCB's Implementation of those Laws", 2002.

Monterey County Water Resource Agency collects monthly groundwater pumping data from well operators and maintains the data in the Groundwater Extraction Management System (GEMS) database. Detailed pumping data from the GEMS database was used to calibrate pumping simulated by the consumptive use methodology for truck crops and vineyards and also verify and adjust irrigation efficiencies, and could be used to model higher resolution of spatial variations in pumping. "The accuracy of the SVIGSM depends on the accuracy of calibration and host data and parameters used in the model. These include… Estimates of ground water pumping and distribution…" as well as eight other factors.[10] No analysis of the accuracy of the factor data was performed, and thus no propagation of error calculation to final results. However, by inspection of the model residuals, a "valley-wide level of accuracy of ±5 feet" is claimed for the SVIGSM. The National Resource Council recommends a full error analysis of ground water models as standard practice.[11] Independent confirmation of this extensively used model and its accuracy are impossible without the data used in its construction and calibration. As extended drought limits surface deliveries to the Castroville Seawater Intrusion Project for blending with lower quality reclaimed water, accurate prediction with the SVIGSM of the extent that replacement pumping in the deep aquifer will induce seawater intrusion into the last unintruded coastal aquifer is critical.

Measurement and data availability from Imperial Irrigation District including conservation and flows to the Salton Sea provides another relevant example. Investments of the magnitude considered for Salton Sea restoration require 1) a transparent process in which the public and decision makers can reliably analyze alternatives, 2) cost-effective reduction of inflow uncertainties since design success critically depends on future water flows, 3) a robust design that has flexibility to be adjustable over the remaining range of possible future inflows.

Careful reading of recent reports by IID, DWR, U.S. Bureau of Reclamation, and consultants hired by each agency highlight the gaps in understanding of current flows and the need for improvement in measurement and database management. Stated succinctly, the critical data is not publicly available for review and thus disputes arise between the consultants of various stakeholders. Pointedly, this renders the analysis of future flows of water to the Sea as tenuous at best, as evidenced by the commendable uncertainty analysis in DWR's January 2006 Draft Hydrology Report. Recent studies discussing private analysis of the data sources upon which restoration efforts are likely to be based indicate that the data is inconsistent and incomplete. The manner in which assumptions replace reliable data in the estimation of flows to the Sea is hidden from public scrutiny.

The opaque development and documentation of the data inputs used to calibrate the Imperial Irrigation Decision Support System (IIDSS), the model used to estimate changes in all flows through the Imperial Valley, do not satisfy the criteria for public transparency.[12] Stating that "Data gaps were identified and assumptions were made to

[10] MCWRA, Draft Technical Memorandum Update of the SVIGSM, p. 27, October 1999.
[11] National Research Council, *Ground Water Models, Scientific and Regulatory Applications*, National Academy Press, Washington, D.C., 1990.
[12] IID, Summary Report IIDSS, December 2001.

fill them (p. 2-7)" without further explanation is insufficient. Stating that "This partitioning of on-farm water into consumptive use and tailwater and tilewater return flow components is a complex process within the on-farm system (p. 2-3)" without further explanation is insufficient. Stating "Because only limited flow measurements in the drainage system were available, professional judgment was used to determine the fractions of water deliveries that returned to the drainage system (p. 2-8)" without further explanation is insufficient.

Numerous attempts to quantify the flows through the water delivery and drainage system using water balance methods have been published over the years and reviewed during the recent Part 417 process and in connection with Salton Sea restoration. The disparate estimates of component flows arise due to a lack of *direct measurement*. Planning investments of the magnitude contemplated for Salton Sea restoration based on this level of uncertainty when much could be resolved through systematic measurement is nearly unconscionable.

As water becomes more scarce during shortage situations necessitating an allocation program and substantial investments in conservation programs, accurate measurement of flows through the water delivery and drainage system become crucial for effective design, implementation, and management of these programs. Moreover, the fairness, economic efficiency, accuracy of water accounting, and transparency of a water allocation program are all enhanced when all significant deliveries are reliably measured and recorded. The August 2006 Draft Final Report of the Equitable Distribution Study sheds some light on the reliability and consistency of recorded data. Independent consultants hired by IID to analyze allocation methods during shortage situations conclude:

> Regarding an apportionment based on individual field history, after a careful analysis of the District's data, we came to the conclusion that the District does not have a sufficiently consistent and complete record of these individual field deliveries and, therefore, it would not be practical for the District to apportion water based on the average historical delivery to each individual field.
>
> The reason for this conclusion is as follows. There are almost 7,000 fields which have received at least one delivery of water between 1987 and 2005, and therefore have some sort of claim to receive water. About 5,000 of these fields received one delivery of water in every year over the period. The other 2,000 fields do not have a consistent long-run history of deliveries. Of the 5,000 fields with a long-run history of deliveries, we estimate that about 20-30% may have histories that are incomplete or questionable.3 In total, there are as many as 3,000 or more fields with histories that are problematic for apportionment based on individual field history (p. 3-4).

They further explain the "apparent" source of these inconsistencies:

> Having explored the data on field deliveries, we have come to the conclusion that a short-term apportionment based on the average historical use of each field is not a practical proposition because of gaps and incompleteness in the data. These arise in two ways: (1) There is not a complete history for every field in the District that received water. (2)

> There are sometimes errors in how the data were recorded which make the individual histories too unreliable for a statistical determination of history.

In October 2013, the IID board revised its shortage apportionment plan from 100% straight-line only to 50% historical use and 50% straight-line.

Proposed Measurement and Water Data Disclosure to Serve the Public Interest

The water data proposed for release to achieve the public benefits enumerated is limited to that which would allow for observation of water policy, rights and management outcomes on water sources and environmental flows. Water quantity and quality interactions of any water user with both other users and non-extractive uses, and thus the public beyond the unit, satisfies this criterion. Therefore, the proposed data requirement is the location, timing, quantity and quality of any diversion/extraction and location, timing, quantity and quality of return flows, whether surface runoff (tailwater) or deep percolation (also accounting for drain interception of percolation). Any other information about the practices on the farm would be unnecessary for the purposes of observing water quantity and quality resource management outcomes. Water diversion/extraction occurs at the farm gate or well making either the natural location for reporting. However, since multiple gates or wells could serve a field or farming unit, the water database would have to be structured to link appropriate diversion/extraction with return flow.

Since measurement of quantity and quality of return flows may incur substantial cost especially with respect to percolation, the farmer would have the option to report substitute information that could be used to estimate return flow location, timing, quantity and quality. Crop type, crop yield (to estimate ET), applied fertilizer and pesticides by type and quantity, irrigation technology, irrigation and fertilizer management processes, soil type, soil slope, and tailwater quantity measurement combined with available effective rainfall data would be a reasonable substitute for the minimal data requirements relating to return flows identified above. A further option could require reporting, but not disclosure, of this additional information if quantity and quality measurement data on return flows is reported.

These reporting and database requirements are robust for achieving the identified public benefits under the most likely potential future evolutions of water institutions to relieve reallocation pressures: 1) more extensive use of water markets for exchange of conserved water to improve allocative efficiency through shrinking the gap between the marginal value of water in different uses or 2) more extensive administrative or judicial evaluations of waste and alternative beneficial uses and subsequent “transfers” to achieve the same purpose.

Finally, the reason for the inclusion of return flow reporting requirements is two-fold. First, only actual return flow quantities can be diverted for subsequent use or left in-situ for environmental benefits. It is well-known by economists that increasing irrigation efficiency may not save any water, as consumptive use of water may increase even as water application decreases; more accurate timing and location of water in the root zone

increases consumptive use and crop yield and reduces return flow.[13] Therefore, conservation programs measured in terms of changes in applied water without accounting for changes in return flow can only overestimate the actual amount of conserved water. Return flow measurements are needed for the determination of actual "wet water" conservation in terms of changes in consumptive use. Second, return flow quantity and quality are needed to assess water quality management outcomes. Both the quantity of pollutant loading and the dilution effect from increasing water quantity are needed to model later pollutant concentrations from multiple return flows.

Value of Protection of Water Data Confidentiality

How will the disclosure of previously confidential water data affect business? Since agriculture is the largest sectoral water user in California, we discuss the issues in a farming context. However, the framework of the analysis can be applied to other sectors.

The value of proprietary information to the holder and the ability to control the information depends on 1) any profit differential between those with the information and those without, 2) how widely the information is known by competitors, employees and suppliers, 3) the cost or ease to acquire or develop the proprietary information, and 4) the value of the proprietary information to competitors.

The two possible proposed data disclosure methods allow for less disclosure if an owner is willing to pay for quantity and quality measurements of return flows. Thus, if the owner attributes a large profit differential to proprietary information, return flow measurements will be more affordable and more information can remain confidential. For lower perceived value proprietary information, more information would be disclosed as a substitute for return flow measurements, but some information would remain proprietary: labor and equipment costs for field preparation, planting, and harvest.

These options allow for choice in disclosure relative to the value of the propriety information, and only that data necessary to achieve the identified public benefits through observation of water quantity and quality resource management outcomes are ever publicly disclosed.

On the other hand, disclosure and public scrutiny may encourage better utilization of applied water and improved economic performance for some farms. From Technical Report 2, Nitrogen Sources and Loading to Groundwater of recent SWRCB Nitrate Study (see footnote 1):

> The role human decisions play in irrigation system performance and water management should not be overlooked. In SV and TLB, growers and their irrigators decide when, where, and how much water to apply. The operator manages soil water and, by extension, deep percolation. While

[13] Caswell, Margriet, and David Zilberman , "The effects of well depth and land quality on the choice of irrigation technology", *American Journal of Agricultural Economics*, 1986; Ward, Frank and Manuel Pulido-Velazquez, "Water conservation in irrigation can increase water use", Proceedings of the National Academy of Sciences, 2008; and Huffaker, Ray, "Conservation potential of agricultural water conservation subsidies," *Water Resources Research* , 2008.

> pressurized irrigation systems, sprinklers and microirrigation, can precisely control water flow and thus have a greater technical potential for field uniformity and delivery efficiency, using a high-efficiency technology (e.g., drip) will only increase irrigation performance if managed properly. It is the management of those systems that results in optimal or non-optimal performance. Likewise, performance of surface irrigation systems are significantly influenced by operators and can achieve reasonable efficiency levels, though their absolute technical potential is far less than pressurized systems. As a point of reference, Hanson (1995) reported that efficiencies among irrigation types were similar in practice across nearly 1000 irrigation systems monitored in California. Drip and microsprinkler systems did not show appreciably higher performance (*ibid*.). Observed irrigation efficiencies ranged between 70 and 85% for both microirrigation and furrow irrigation. It is worth noting that actual efficiencies may be below or above this range, and that changes in management practice may have improved to capture the technical advantage of pressurized systems in the 16 years since this study was published. At least one study suggests that variance in efficiency may not have increased despite the recent use of more sophisticated equipment. When irrigation performance was measured on nine drip irrigated celery fields in the Salinas Valley, performance was low. Water application rates ranged between 85% and 414% of ET, indicating under- and over-irrigation were common despite advanced capabilities (Breschini & Hartz 2002). Celery may not be representative of other cropping systems less sensitive to water stress; however, the results illustrate the potential for current irrigation system mismanagement even with advanced technology. Though the ability to apply the desired amount of water with each application is limited by the configuration of the irrigation system and hence uniformity and efficiency are somewhat predetermined, there are many practices growers can use to optimize water delivery systems (Dzurella et al. 2012).

Therefore, while recommended data disclosure is limited for the identified public purpose and structured to allow other data to remain proprietary to mitigate private costs, public scrutiny may also encourage better water management and economic gains for other currently water inefficient farmers who do not possess that proprietary information, independent of any valuable proprietary information disclosure.

Water System Security

Concerns about potential for sabotage of water infrastructure systems has long existed but has greatly heightened since the 9/11 terrorist attacks.

> Broadly speaking, water infrastructure systems include surface and ground water sources of untreated water for municipal, industrial, agricultural, and household needs; dams, reservoirs, aqueducts, and pipes that contain and transport raw water; treatment facilities that remove contaminants from raw water; finished water reservoirs; systems that distribute water to users; and wastewater collection and treatment facilities.[14]

For drinking water systems, most experts identified the distribution system as the single most important vulnerability and more experts identified it as among the top vulnerabilities than any other vulnerability.

> The explanations they offered most often related to the accessibility of distribution systems at numerous points. One expert, for example, cited the difficulty in preventing the introduction of a contaminant into the distribution system from inside a building "regardless of how much time, money, or effort we spend protecting public facilities." Experts also noted that since the water in the distribution system has already been treated and is in the final stages of being transferred to the

[14] Copeland, Claudia, "Terrorism and Security Issues Facing the Water Infrastructure Sector", Congressional Research Service, December 5, 2010.

> consumer, the distribution of a chemical, biological, or radiological agent in such a manner would be virtually undetectable until it has affected consumers.[15]

As compared to the distribution system, very few experts identify the source water supply as the single most important vulnerability but they do identify it as a top vulnerability but at a lower rate than the distribution system because:

> (1) that source water typically involves a large volume of water, which in many cases could dilute the potency of contaminants; (2) the length of time (days or even weeks) that it typically takes for source water to reach consumers; and (3) that source water will go through a treatment process in which many contaminants are removed.[16]

A state-level review on water data confidentiality must consider these real water security risks in the context of the public interest in conjunction with other risks to water quantity and quality. The discussion here is limited to potential modifications in data disclosure to reduce these risks, while still achieving the public interest gains of disclosure in water data.

Of the minimal data requirements for the public interest, disclosure of location of diversion/extraction is most often cited as the greatest security risk. Surface water diversion locations are public and known. Groundwater well location information is publicly disclosed in all western states except California. Therefore, precise well location disclosure should be reviewed in the context of these competing public interests.

Precise location is not needed for most of the public interest benefits enumerated above, except for "independent public review of water resource models to better manage existing resources." From the perspective of modeling groundwater, most often accomplished by finite element calculations, well location only needs to be known up to the resolution of the model (finite element size). Thus, extraction and diversion locations could be publicly accessible with less precision, perhaps in broad areas or zones, such as "...to the nearest 40-acre subdivision…" from Section 5103 of the Water Code. Then, an application review board could be established to consider limited use and no public disclosure of more precise location data for legitimate modeling in pursuit of reviewing existing models or in development of independent models for the public interest. This extra layer of the disclosure process would mitigate the terrorist risk from direct public access to a specific subset of reporting requirements without substantially reducing the gains in water management benefits from direct access.

Conclusion

Little or no attempt has been made to balance the public and private interest with respect to water data confidentiality for all water users. With water becoming more economically scarce, the need for greater coordinated management at the state level, coupled with the unresponsiveness of local water agencies to data requests to review existing models and develop independent models, indicates the time has come for a

[15] GAO, "Drinking Water: Experts' Views on How Future Federal Funding Can Best Be Spent to Improve Security", Report to the Committee on Environment and Public Works, U.S. Senate, p. 25, 2003.
[16] GAO report p. 8.

comprehensive state-level review of water data confidentiality policies for all water end-users and water sources that considers the interests of all citizens.

Permanent confidentiality is not in the public interest. Disclosure of water data can improve water resource modeling and management, increase accountability, compliance, transparency, and credibility and reduce delays to solving pressing water quality and quantity problems. The scope of water data disclosure can be limited to that which most serves the public interest, thus mitigating potential profit losses from disclosure of proprietary information. Similarly, online, publicly accessible locational data for groundwater wells could be available only at a coarse spatial resolution in consideration of water security threats, but more precise locational data would be available after demonstrating a legitimate public purpose.

After consideration of the public and private interests, such a state-level review could establish a limited water data confidentiality period of 1-5 years or perhaps abolish confidentiality altogether.

Then a publicly accessible and searchable water information database, based on systematic measurement and recordkeeping of individual unit water use and return flows, would be established in furtherance of the public and private interests in better water resource modeling and management in the State of California.