Linda S. Adams
Secretary for
Environmental Protection

California Regional Water Quality Control Board

San Francisco Bay Region

1515 Clay Street, Suite 1400, Oakland CA 94612
(510) 622-2300 • Fax (510) 622-2460
http://www.waterboards.ca.gov/sanfranciscobay

Arnold Schwarzenegger
Governor

TENTATIVE ORDER NO. R2-2010-XXXX
NPDES NO. CA0004961

The following Discharger is subject to waste discharge requirements as set forth in this Order.

Table 1. Discharger Information

Discharger	**Tesoro Refining and Marketing Company**
Name of Facility	Tesoro Golden Eagle Refinery
Facility Address	150 Solano Way
	Martinez, CA 94553
	Contra Costa County
The United States Environmental Protection Agency (USEPA) and the Regional Water Quality Control Board have classified this discharge as a major discharge.	

Discharges by the Tesoro Refining and Marketing Company from the discharge points identified below are subject to waste discharge requirements as set forth in this Order.

Table 2. Discharge Location

Discharge Point	Effluent Description	Discharge Point Latitude	Discharge Point Longitude	Receiving Water
001	Treated refinery process wastewater and storm water	38º, 02’, 54” N	122º, 05’, 22” W	Suisun Bay
003	Storm water from about 76 acres in the southwestern portions of the Tract 4 tank farm.	38º, 00’, 44” N	122º, 03’, 55” W	Walnut Creek
004	Storm water from about 198 acres including the southeast portion of the Tract 4 tank farm and all of the Tract 6 tank farm, and offsite facilities.	38º, 01’, 21” N	122º, 03’, 30” W	Hastings Slough
005-T2NW	Storm water from small areas near a stairway leading down to a non-operating saltwater pump station on the creek side of the slope.	38º 01' 48.73"N	122º 04' 31.29"W	Pacheco Slough
005-T2S-A	Storm water from small areas near the channel drain along the north side of a fence at a used equipment reclamation area before Gate 15 south of the Foster Wheeler area.	38º 01' 8.92"N	122º 04' 01.05"W	Pacheco Slough
005-T2S-B	Storm water from small areas near the fence line immediately north of the railroad tracks. This area is at the extreme south end of Tract 2.	38º 01' 09.52"N	122º 04' 02.96"W	Pacheco Slough

Discharge Point	Effluent Description	Discharge Point Latitude	Discharge Point Longitude	Receiving Water
005-T2S-C	Storm water from small areas across the road west of the Foster-Wheeler yard (three tall gray tanks) where runoff form the asphalt perimeter drainage channels run under the road towards the creek.	38° 01' 12.75"N	122° 04' 05.76"W	Pacheco Slough
005-T2SW	Storm water from small areas near the "D" Street firehouse, against the fence. This area includes paved areas around the auto shop, and the western side of the Purchasing and Storehouse.	38° 01' 20.39"N	122° 04' 09.53"W	Pacheco Slough
005-T4NW	Storm water from small areas at the easternmost culvert that conveys runoff from this area under the road to the west.	38° 01' 04.58"N	122° 04' 03.06"W	Pacheco Slough
005-T4SW	Storm water from small areas near the outlet of the pipe that drains the impoundment. The pipe has a locked valve on it and is required to be sampled when there is a discharge from the impoundment.	38° 00' 15.25"N	122° 03' 29.78"W	Pacheco Slough
005-AS	Storm water from small areas near the culvert in the northwestern part of the area.	38° 01' 32.15"N	122° 07' 18.85"W	Unnamed slough to Carquinez Strait
006	Waste Management Unit (WMU) 5 Cap Runoff	38° 01' 38.47"N	122° 03' 24.05"W	Hastings Slough

Table 3. Administrative Information

This Order was adopted by the Regional Water Board on:	**<Adoption date>**
This Order shall become effective on:	**June 9, 2010**
This Order shall expire on:	**June 8, 2015**
The Discharger shall file a Report of Waste Discharge in accordance with Title 23, California Code of Regulations, as application for issuance of new waste discharge requirements no later than:	**180 days prior to the Order expiration date**

I, Bruce H. Wolfe, Executive Officer, do hereby certify that this Order with all attachments is a full, true, and correct copy of an Order adopted by the California Regional Water Quality Control Board, San Francisco Bay Region, on <**adoption date**>.

_____

Bruce H. Wolfe, Executive Officer

Table of Contents

I. Facility Information 5
II. Findings 5
III. Discharge Prohibitions 11
IV. Effluent Limitations and Discharge Specifications 11
A. Effluent Limitations – Discharge Point 001 11
B. Storm Water Effluent Limitations - Discharge Points 002 – 006 14
C. Land Discharge Specifications 15
D. Reclamation Specifications 15
V. Receiving Water Limitations 15
VI. Provisions 16
A. Standard Provisions 16
B. Monitoring and Reporting Program (MRP) Requirements 16
C. Special Provisions 16
1. Reopener Provisions 16
2. Special Studies and Additional Monitoring 17
3. Best Management Practices and Pollution Minimization 19
4. Other Special Provisions 21

Tables

Table 1. Discharger Information 1
Table 2. Discharge Location 1
Table 3. Administrative Information 2
Table 4. Facility Information 5
Table 5. Beneficial Uses of Receiving Waters 8
Table 6. Production-Based Mass Emission Limits & Technology-Based Concentration Limits 11
Table 7. Effluent Limitations for Toxic Substances 12
Table 8. Storm Water Runoff Allocation 12
Table 9. Ballast Water Allocation 12
Table 10. Selenium Mass Emission Limitation 13
Table 11. Effluent Limitations for Storm Water Outfalls 15
Table 12. Supplemental Effluent Limitations for Storm Water Outfalls 15
Table 13. Receiving Waters and Effluent Selenium Characterization Study Tasks and Schedule 18
Table 14. Cyanide Action Plan 21
Table 15. Copper Action Plan 21

Attachments

Attachment A – Definitions A-1
Attachment B – Facility Map B-1
Attachment C – Process Flow Diagram C-1
Attachment D – Federal Standard Provisions D-1
Attachment E – Monitoring and Reporting Program (MRP) E-1
Attachment F – Fact Sheet F-1
Attachment G – Regional Standard Provisions, and Monitoring and Reporting Requirements (Supplement to Attachment D) G-1

I. FACILITY INFORMATION

The following Discharger is subject to the waste discharge requirements as set forth in this Order:

Table 4. Facility Information

Discharger	Tesoro Refining and Marketing Company
Name of Facility	Tesoro Golden Eagle Refinery
Facility Address	150 Solano Way
	Martinez, CA 94553
	Contra Costa County
Facility Contact, Title, Phone No.	Peter Carroll, Environmental Engineer (925) 335-3497
Mailing Address	150 Solano Way, Martinez, CA 94553
Type of Facility	Petroleum Refinery
Average Facility Flow (2004-2009)	4.1 million gallons per day (MGD)

II. FINDINGS

The California Regional Water Quality Control Board, San Francisco Bay Region (hereinafter Regional Water Board), finds:

A. Background. Tesoro Refining and Marketing Company (hereinafter Discharger) currently discharges under Order No. R2-2005-0041 (hereinafter previous permit) serving as National Pollutant Discharge Elimination System (NPDES) Permit No. CA0004961. Order No. R2-2005-0041 was amended by Order No. R2-2010-0056 that implemented site specific objectives for cyanide, and by Order No. R2-2010-0057 that amended requirements for selenium. The Discharger submitted a Report of Waste Discharge dated March 1, 2010, and applied for reissuance of its NPDES permit to discharge treated wastewater and storm water from the Tesoro Golden Eagle Refinery. The Discharger's discharge is also currently covered under Order No. R2-2007-0077 (NPDES Permit CA0038849) that superseded all requirements on mercury from wastewater discharges in the region. The mercury permit is unaffected by this Order.

For purposes of this Order, references to the "discharger" or "permittee" in applicable federal and State laws, regulations, plans, or policies are held to be equivalent to references to the Discharger herein.

B. Facility Description. The Discharger owns and operates a petroleum refinery that processes an average crude oil volume of approximately 160,000 barrels per day (bbls/d). The Discharger receives crude oil by tanker or pipelines for the production of gasoline and diesel fuels. According to 40 CFR Part 419.20, the USEPA has classified this facility as a cracking refinery.

The refinery's wastewater treatment plant treats wastewater from sour water strippers, the ammonia recovery unit, acid plant effluent, cooling tower blowdown, boiler blowdown, cooling tower and boiler blowdown from the Foster Wheeler Cogeneration Plant, neutralized demineralizer regeneration water (hereinafter the Reject Water) from the water treatment system, the fire water system, groundwater from remediation activities; non-hazardous wastewater generated from offsite Discharger-owned facilities, the Monsanto Company Catalyst Plant, and cooling tower and boiler blowdown from Air Liquide Carbon Dioxide Plant. Additionally, the wastewater treatment plant also treats sanitary wastewater and stormwater from about 710 acres of process areas.

The Discharger routes process wastewater to a central pump station (i.e., No. 1 pump station). From this pump station, process wastewater flows to an API oil water and solids separator that consists of a head channel that feeds four concrete channels. The API Separator uses a chain driven system to remove oil and solids. The Discharger pumps this material to Tanks 699 and 700 for additional oil and water separation and recovery. After the API separator, wastewater flows by gravity to four Dissolved Nitrogen Flotation (DNF) units where additional oil and solids are removed.

From the DNF units, wastewater is routed through an air stripper where a blower forces air through a grid of perforated tubes. The vapors from the air stripper, DNF units, and API Separator are incinerated in a thermal oxidizer. The Discharger pumps wastewater from the Air Stripper to Surge Pond No. 1 for biotreatment. Surge Pond No. 1 is a 14-acre rectangular basin that is baffled into six sections where aeration and nutrients are provided. From Surge Pond No. 1, wastewater flows by gravity to Surge Pond No. 2. Surge Pond No. 2 is an 8-acre rectangular basin that is also aerated to ensure aerobic conditions. The Discharger may pump up to 900 gallons per minute of wastewater from Surge Pond No. 2 to the refinery for reuse as industrial water. The remaining wastewater from Surge Pond No. 2 is pumped to the Bio-Oxidation Pond (Ox Pond). The Ox Pond is about 108 acres with an estimated capacity of 216 million gallons, but typically operates with a volume of around 150 million gallons. The Ox Pond is aerated at the inlet section of the pond to ensure oxygen levels in wastewater are adequate. It passively treats wastewater by providing a retention time of about 30 days.

From the Ox Pond, the Discharger routes wastewater to two clarifiers that operate in parallel. In the clarifiers, the Discharger adds coagulants and flocculants to enhance settling of wastewater solids. Clarifier solids are centrifuged, and disposed of offsite. The supernatant from the centrifuge is routed to Surge Pond No. 1. From the clarifiers, wastewater flows through a toothed weir to two filters (Round and Zimpro) that operate in parallel. The Round filter is multimedia (sand and anthracite) and consists of six chambers, while the Zimpro filter is a six-celled trickling sand filter. Both of these filters contain automatic backwash functions that allow them to maintain continuous operation. Backwash water from the filters is routed to Surge Pond No. 1 for treatment, and treated wastewater is routed to twelve Granular Activated Carbon (GAC) columns that operate in pairs (i.e., lead and lag). The Discharger uses GAC columns, as needed, to ensure treated wastewater is not toxic to aquatic life. Backwash water from the GAC columns is also discharged to Surge Pond No. 1 for further treatment.

After the GAC columns, the Discharger normally routes wastewater to a 26-acre Coke Pond to provide additional polishing of treated effluent. From the Coke Pond, the Discharger routes treated wastewater to the Clean Canal. Alternatively, the Discharger may route GAC column effluent directly to the Clean Canal.

The Clean Canal also receives storm water runoff, and neutralized demineralizer reject water from the Discharger's water treatment plant. The Clean Canal conveys treated wastewater and the other streams to a sump containing three pumps that discharge to Suisun Bay through a 27-inch diameter outfall. The outfall, referred to as E-001, terminates with a multi-port diffuser located under the Avon Wharf 45 feet below mean lower low water.

The refinery also has several storm water discharge points to Pacheco Creek, Hastings Slough, and Walnut Creek (Discharge Points 003 – 006).

Attachment B to this Order is a Location Map showing the location of the Golden Eagle Refinery within the Region; and Attachment C is a flow schematic of the plant.

C. Legal Authorities. This Order is issued pursuant to Clean Water Act (CWA) section 402 and implementing regulations adopted by the USEPA, and California Water Code (CWC) Chapter 5.5, Division 7, commencing with section 13370. It shall serve as an NPDES permit for the point source discharges identified in Table 2. This Order also serves as Waste Discharge Requirements (WDRs) pursuant to CWC Article 4, Chapter 4, Division 7, commencing with section 13260.

D. Background and Rationale for Requirements. The Regional Water Board developed the requirements in this Order based on information submitted as part of the application, through monitoring and reporting programs, and other available information. The Fact Sheet (Attachment F), which contains background information and rationale for Order requirements, is hereby incorporated into this Order and constitutes part of the Findings for this Order. Attachments A through E and G are also incorporated into this Order.

E. California Environmental Quality Act (CEQA). Pursuant to CWC section 13389, this action to adopt an NPDES permit is exempt from the provisions of CEQA.

F. Technology-Based Effluent Limitations. CWA section 301(b) and 40 CFR 122.44 require permits, at a minimum, to include conditions meeting applicable technology-based requirements and any more stringent effluent limitations necessary to meet applicable water quality standards. Discharges authorized by this Order must meet technology-based requirements USEPA established at 40 CFR 419, *Effluent Limitations Guidelines for the Petroleum Refining Point Source Category*, as well as technology-based requirements established using Best Professional Judgment (BPJ) pursuant to 40 CFR 125.3. A detailed discussion of the development of the technology-based effluent limitations in this Order is included in the Fact Sheet.

G. Water Quality-Based Effluent Limitations. CWA section 301(b) and 40 CFR 122.44(d) require that permits include limitations more stringent than applicable federal technology-based requirements when necessary to achieve applicable water quality standards.

40 CFR 122.44(d)(1)(i) mandates that permits include effluent limitations for all pollutants that are or may be discharged at levels that have a reasonable potential to cause or contribute to an exceedance of a water quality standard, including numeric and narrative objectives within a standard. Where reasonable potential has been established for a pollutant, but there is no numeric objective for the pollutant, water quality-based effluent limitations (WQBELs) must be established using (1) USEPA criteria guidance under CWA section 304(a), supplemented where necessary by other relevant information; (2) an indicator parameter for the pollutant of concern; or (3) a calculated numeric water quality criterion, such as a proposed State criterion or policy interpreting the State's narrative criterion, supplemented with other relevant information, as provided in 40 CFR 122.44(d)(1)(vi).

H. Water Quality Control Plans. *The Water Quality Control Plan for the San Francisco Bay Basin* (Basin Plan) is the Regional Water Board's master water quality control planning document. It designates beneficial uses and water quality objectives for waters of the State, including surface waters and groundwater. It also includes programs of implementation to achieve water quality objectives. The Basin Plan was adopted by the Regional Water Board and approved by the State Water Resources Control Board (State Water Board), USEPA, and the Office of Administrative

Law (OAL), as required. Beneficial uses described by the Basin Plan and applicable to Suisun Bay and Carquinez Strait are listed in Table 5. Requirements of this Order implement the Basin Plan.

Table 5. Beneficial Uses of Receiving Waters

Discharge Point	Receiving Water Name	Beneficial Uses
001, 003, 004 and 005-T2NW, 005-T2S-A, 005-T2S-B, 005-T2S-C, 005-T2SW, 005-T4NW, 005-T4SW, 006 [1]	Suisun Bay	Ocean, Commercial and Sport Fishing (COMM) Industrial Process Supply (PRO) Estuarine Habitat (EST) Industrial Service Supply (IND) Fish Migration (MIGR) Navigation (NAV) Preservation of Rare and Endangered Species (RARE) Water Contact Recreation (REC1) Non-Contact Water Recreation (REC2) Wildlife Habitat (WILD) Fish Spawning (SPWN)
005-AS	Carquinez Strait	Ocean, Commercial and Sport Fishing (COMM) Estuarine Habitat (EST) Industrial Service Supply (IND) Fish Migration (MIGR) Navigation (NAV) Preservation of Rare and Endangered Species (RARE) Water Contact Recreation (REC1) Non-Contact Water Recreation (REC2) Wildlife Habitat (WILD) Fish Spawning (SPWN)

[1] Outfalls 003, 004, and 005 (with the exception of 005-AS), flow to Walnut Creek, Hastings Slough, or Pacheco Slough, all of which flow to Suisun Bay. Beneficial uses of Suisun Bay apply to these creeks due to the Tributary Rule. Outfall 006 will flow to Hastings Slough, which is tributary to Suisun Bay.

I. National Toxics Rule (NTR) and California Toxics Rule (CTR). USEPA adopted the NTR on December 22, 1992, and later amended it on May 4, 1995, and November 9, 1999. About forty criteria in the NTR applied in California. On May 18, 2000, USEPA adopted the CTR. The CTR promulgated new toxics criteria for California and, in addition, incorporated the previously adopted NTR criteria that applied in the State. The CTR was amended on February 13, 2001. These rules contain water quality criteria for priority pollutants.

J. State Implementation Policy. On March 2, 2000, the State Water Board adopted the *Policy for Implementation of Toxics Standards for Inland Surface Waters, Enclosed Bays, and Estuaries of California* (State Implementation Policy or SIP). The SIP became effective on April 28, 2000, with respect to the priority pollutant criteria USEPA promulgated for California through the NTR and to the priority pollutant objectives the Regional Water Board established in the Basin Plan. The SIP became effective on May 18, 2000, with respect to the priority pollutant criteria the USEPA promulgated through the CTR. On February 24, 2005, the State Water Board adopted amendments to the SIP that became effective on July 13, 2005. The SIP establishes implementation provisions for priority pollutant objectives and provisions for chronic toxicity control. Requirements of this Order implement the SIP.

K. Compliance Schedules and Interim Requirements. SIP section 2.1 provides that, based on an existing discharger's request and demonstration that it is infeasible for it to achieve immediate compliance with an effluent limitation derived from a CTR criterion, compliance schedules may be allowed in an NPDES permit. The State Water Board adopted Resolution No. 2008-0025 on April 15, 2008, titled *Policy for Compliance Schedules in National Pollutant Discharge Elimination System Permits*, which includes compliance schedule policies for pollutants that are not addressed by the SIP. This policy has been approved by OAL and USEPA, and became effective on August 27, 2008. Where a compliance schedule for a final effluent limitation exceeds 1 year, permits must include an interim numeric limitation for that pollutant. Where allowed by the Basin Plan, compliance schedules and interim effluent limitations or discharge specifications may also be granted to allow time to implement a new or newly interpreted narrative water quality objective. This Order does not include a compliance schedule.

L. Alaska Rule. On March 30, 2000, USEPA revised its regulation that specifies when new and revised State and tribal water quality standards become effective for CWA purposes [65 Fed. Reg. 24641 (April 27, 2000) (codified at 40 CFR 131.21)]. Under the revised regulation (also known as the Alaska Rule), USEPA must approve new and revised standards submitted to USEPA after May 30, 2000, before they can be used for CWA purposes. The final rule also provides that standards already in effect and submitted to USEPA by May 30, 2000, may be used for CWA purposes, whether or not approved by USEPA.

M. Stringency of Requirements for Individual Pollutants. This Order contains both technology-based effluent limitations and water quality-based effluent limitations (WQBELs) for individual pollutants. The technology-based effluent limitations consist of restrictions on biochemical oxygen demand (BOD_5), oil and grease, pH, total suspended solids (TSS), chemical oxygen demand (COD), ammonia, sulfide, 4-aminoantipyrine (4AAP) phenolics, and total and hexavalent chromium. Derivation of these technology-based limitations is discussed in the Fact Sheet. This Order's technology-based pollutant restrictions implement the minimum applicable federal technology-based requirements. In addition, this Order contains effluent limitations more stringent than the minimum federal technology-based requirements as necessary to meet water quality standards. These limitations are not more stringent than required by the CWA.

WQBELs have been derived to implement water quality objectives that protect beneficial uses. Both the beneficial uses and the water quality objectives have been approved pursuant to federal law and are the applicable federal water quality standards. To the extent that toxic pollutant WQBELs were derived from the CTR, the CTR is the applicable standard pursuant to 40 CFR 131.38. The procedures for calculating the individual WQBELs for priority pollutants are based on the SIP, which was approved by USEPA on May 18, 2000. All beneficial uses and water quality objectives in the Basin Plan were approved under State law and submitted to and approved by USEPA prior to May 30, 2000. Any water quality objectives and beneficial uses submitted to USEPA prior to May 30, 2000, but not approved by USEPA before that date, are nonetheless applicable water quality standards for purposes of the CWA pursuant to 40 CFR 131.21(c)(1). Collectively, this Order's restrictions on individual pollutants are no more stringent than required to implement CWA requirements.

N. Antidegradation Policy. 40 CFR 131.12 requires that state water quality standards include an antidegradation policy consistent with the federal policy. The State Water Board established California's antidegradation policy through State Water Board Resolution No. 68-16, which

incorporates the federal antidegradation policy where the federal policy applies under federal law and requires that the existing quality of receiving waters be maintained unless degradation is justified based on specific findings. The Basin Plan incorporates by reference and implements both the State and federal antidegradation policies. As discussed in the Fact Sheet, the permitted discharges are consistent with the antidegradation provisions of 40 CFR 131.12 and State Water Board Resolution No. 68-16.

O. Anti-Backsliding Requirements. CWA sections 402(o)(2) and 303(d)(4) and 40 CFR 122.44(l) prohibit backsliding in NPDES permits. These anti-backsliding provisions require effluent limitations in a reissued permit to be at least as stringent as those in the previous permit, with some exceptions where limitations may be relaxed. Some effluent limitations in this Order are less stringent than those in the previous permit. As discussed in the Fact Sheet, this relaxation of effluent limitations is consistent with the CWA anti-backsliding requirements and federal regulations.

P. Monitoring and Reporting. 40 CFR 122.48 requires that all NPDES permits specify requirements for recording and reporting monitoring results. CWC sections 13267 and 13383 authorize the Regional Water Board to require technical and monitoring reports. The Monitoring and Reporting Program, which is provided in Attachment E, establishes monitoring and reporting requirements to implement federal and State requirements.

Q. Standard and Special Provisions. Standard Provisions, which apply to all NPDES permits in accordance with 40 CFR 122.41, and additional conditions applicable to specified categories of permits in accordance with 40 CFR 122.42, are provided in Attachment D. The Discharger must comply with all Standard Provisions and with those additional conditions that apply pursuant to 40 CFR 122.42. The Regional Water Board has also included in this Order special provisions applicable to the Discharger. Rationales for the special provisions in this Order are provided in the attached Fact Sheet.

R. Provisions and Requirements Implementing State Law. No provisions of this Order implement State law only. All are required or authorized under the federal CWA and CWC. The Regional Standard Provisions are included as Attachment G.

S. Notification of Interested Parties. The Regional Water Board has notified the Discharger and interested agencies and persons of its intent to prescribe Waste Discharge Requirements for the discharge and has provided them with an opportunity to submit written comments and recommendations. Details of the notification are provided in the Fact Sheet.

T. Consideration of Public Comment. The Regional Water Board, in a public meeting, heard and considered all comments pertaining to the discharges authorized by this Order. Details of the Public Hearing are provided in the Fact Sheet.

IT IS HEREBY ORDERED, that this Order supersedes Order Nos. R2-2005-0041, R2-2010-0056 and R2-2010-0057 except for enforcement purposes, and in order to meet the provisions in CWC Division 7 (commencing with section 13000) and regulations adopted thereunder, and the provisions of the federal Clean Water Act (CWA) and regulations and guidelines adopted thereunder, the Discharger shall comply with the requirements in this Order.

III. DISCHARGE PROHIBITIONS

A. Discharge of wastewater at a location or in a manner different from that described in this Order is prohibited.

B Discharge of process wastewater at any point at which it does not receive an initial dilution of at least 15:1 is prohibited.

C The bypass of untreated or partially treated process wastewater to waters of the United States is prohibited, except as provided for in the conditions stated in I.G.2 of Attachment D to this Order.

IV. EFFLUENT LIMITATIONS AND DISCHARGE SPECIFICATIONS

A. Effluent Limitations – Discharge Point 001

1. Technology-Based Effluent Limitations

a. The Discharger shall maintain compliance with the following effluent limitations at Discharge Point 001, with compliance measured at Monitoring Location EFF-001 as described in the attached MRP (Attachment E):

Table 6. Production-Based Mass Emission Limits & Technology-Based Concentration Limits

Parameter	Units	Effluent Limitations	
		Average Monthly	Maximum Daily
BOD_5	lbs/day	2,300	4,200
COD	lbs/day	16,000	32,000
TSS	lbs/day	1,900	2,900
Oil & Grease	lbs/day	680	1,300
	mg/L	8	15
Phenolic Compounds	lbs/day	13	32
Ammonia (N)	lbs/day	1,300	2,800
Sulfide	lbs/day	12	28
Total Chromium	lbs/day	15	44
Hexavalent Chromium	lbs/day	1.3	2.8
pH	s.u.	6.0 - 9.0 at all times	

b. In addition to the monthly average and daily maximum pollutant weight allowances shown in A.1, allocations for pollutants attributable to storm water runoff and ballast water discharged as a part of Outfall 001 are permitted in accordance with the following schedules:

Table 7. Storm Water Runoff Allocation

Pollutant	Units	Monthly Average	Daily Maximum
BOD_5	mg/L	26	48
TSS	mg/L	21	33
COD	mg/L	180	360
Oil and Grease	mg/L	8.0	15

Pollutant	Units	Monthly Average	Daily Maximum
Phenolic Compounds	mg/L	0.17	0.35
Total Chromium	mg/L	0.21	0.60
Hexavalent Chromium	mg/L	0.028	0.062

Table 8. Ballast Water Allocation

Pollutant	Units	Monthly Average	Daily Maximum
BOD_5	mg/L	26	48
TSS	mg/L	21	33
COD	mg/L	240	470
Oil and Grease	mg/L	8.0	15

2. Effluent Limitations for Toxics Substances

a. The Discharger shall maintain compliance with the following effluent limitations at Discharge Point 001, with compliance measured at Monitoring Location EFF-001:

Table 9. Effluent Limitations for Toxic Substances [1]

Parameter	Units	Final Effluent Limitations	
		Average Monthly	Maximum Daily [2]
Copper	µg/L	13	24
Selenium	µg/L	41	50
Lead	µg/L	3.7	7.8
Cyanide	µg/L	21	42
Dioxin-TEQ	µg/L	1.4×10^{-8}	2.8×10^{-8}
Ammonia (N)	mg/L	26	67
Chlorine Residual	mg/L	----	0.0

[1] a. Limitations apply to the average concentration of all samples collected during the averaging period (daily = 24-hour period; monthly = calendar month).

b. All metals limitations are expressed as total recoverable metal.

[2] The limitation for chlorine residual is an instantaneous maximum.

3. Total Coliform

The median of five consecutive samples collected at Monitoring Locations EFF-001-D1 and EFF-001-D2 shall not have total coliform organisms exceeding 240 MPN/100 mL. Any single sample shall not exceed 10,000 MPN/100 mL.

4. Mass Emission Limitation for Selenium

Until implementation of a TMDL is in effect for selenium, the Discharger shall not increase mass loading of selenium to Suisun Bay through Discharge Point 001 by complying with the following mass emission limitation.

Table 10. Selenium Mass Emission Limitation[1]

Pollutant	Units	Effluent Limitation
Selenium	Annual Average, kg/day	0.45

[1] The selenium mass emission limit is expressed as a running annual average. The running annual average is the arithmetic average of the current day's mass load and the mass loads for each of the previous 364 days, as shown in the following example:

Annual Mass emission rate (kg/day) = $\frac{3.785}{N}\sum_{i=1}^{N} Q_i C_i$

where:

N = number of samples analyzed in any calendar year
Q_i = flow rate (MGD) associated with the Nth sample
C_i = selenium concentration (mg/L) associated with the Nth sample.

5. Acute Toxicity:

a. Representative samples of the effluent at Monitoring Location EFF-001 shall meet the following limits for acute toxicity: Bioassays shall be conducted in compliance with section V.A of the Monitoring and Reporting Program (MRP, Attachment E).

The survival of organisms in undiluted effluent shall be:

(1) an eleven (11) sample median value of not less than 90 percent survival, and

(2) an eleven (11) sample 90 percentile value of not less than 70 percent survival.

b. These acute toxicity limitations are further defined as follows:

11 sample median: A bioassay test showing survival of less than 90 percent represents a violation of this effluent limit, if five or more of the past ten or less bioassay tests show less than 90 percent survival.

90th percentile: A bioassay test showing survival of less than 70 percent represents a violation of this effluent limit, if one or more of the past ten or less bioassay tests show less than 70 percent survival.

c. Bioassays shall be performed using the most up-to-date USEPA protocol and the most sensitive species as specified in writing by the Executive Officer based on the most recent screening test results. Bioassays shall be conducted in compliance with "Methods for Measuring the Acute Toxicity of Effluents and Receiving Water to Freshwater and Marine Organisms," currently 5th Edition (EPA-821-R-02-012), with exceptions granted to the Discharger by the Executive Officer and the Environmental Laboratory Accreditation Program (ELAP) upon the Discharger's request with justification.

d. If the Discharger can demonstrate to the satisfaction of the Executive Officer that toxicity exceeding the levels cited above is caused by ammonia and that the ammonia in the discharge complies with the ammonia effluent limitations, then such toxicity does not constitute a violation of this effluent limitation.

6. Chronic Toxicity

a. Representative samples of the effluent at Monitoring Location EFF-001 shall meet the following limits for chronic toxicity. Bioassays shall be conducted in compliance with MRP section V.B (Attachment E).

The survival of bioassay test organisms in the discharge at Discharge Point 001 shall be:

(1) A three-sample median value equal to or less than 10 TUc, and

(2) A single-sample maximum value equal to or less than 20 TUc.

b. These chronic toxicity limits are defined as follows:

(1) A test sample showing chronic toxicity greater than 10 TUc represents consistent toxicity, and a violation of this limitation if one or more of the past two or fewer tests show toxicity greater than 10 TUc.

(2) A TUc equals 100/NOEL. The NOEL is the no observable effect level, determined from IC_{25}, EC_{25}, or NOEC values. These terms and their usage in determining compliance with the limitations are defined in Appendix E-1 of this Order. The NOEL shall be based on a critical life stage test using the most sensitive test species as specified by the Executive Officer. The Executive Officer may specify two compliance species if test data indicate that there is alternating sensitivity between two species. If two compliance test species are specified, compliance shall be based on the maximum TUc value for the discharge sample from the TUc values obtained through concurrent testing of the two species.

(3) A test sample showing chronic toxicity greater than 20 TUc represents a violation of this limitation.

c. Test Species and Methods

The Discharger shall conduct routine monitoring with the test species and protocols specified in MRP section V.B (Attachment E). The Discharger shall also perform Chronic Toxicity Screening Phase monitoring as described in Appendix E-1 of the MRP. Chronic Toxicity Monitoring Screening Phase Requirements, Critical Life Stage Toxicity Tests and definitions of terms used in the chronic toxicity monitoring are identified in Appendices E-1 and E-2 of the MRP.

B. Storm Water Effluent Limitations - Discharge Points 002 – 006

1. Storm water discharged at Discharge Points 002 – 006 shall not exceed the effluent limitations in Table 11, below.

Table 11. Effluent Limitations for Storm Water Outfalls

Parameter	Units	Effluent Limitations	
		Average Monthly	Maximum Daily
TOC	mg/L	----	110
Oil & Grease	mg/L	----	15
pH	s.u.	6.5 – 8.5 at all times	
Visible Oil	---	None observed	
Visible Color	---	None observed	

2. If there is an exceedance of either limitation for TOC or Oil and Grease expressed in Table 11, above, the effluent limitations in Table 12, below, shall become effective for the discharge point where the exceedance occurred and remain in effect as long as this Order remains in effect.

Table 12. Supplemental Effluent Limitations for Storm Water Outfalls

Pollutant	Units	Daily Maximum	30-Day Average[1]
BOD_5	mg/L	48	26
TSS	mg/L	33	21
COD	mg/L	360	180
Oil and Grease	mg/L	15	8.0
Phenolic Compounds	mg/L	0.35	0.17
Total Chromium	mg/L	0.60	0.21
Hexavalent Chromium	mg/L	0.062	0.028

[1] Compliance with the 30-day average limitation shall be determined as a rolling 30-day average. The rolling 30-day average shall be calculated as the arithmetic average of the concentrations detected over the current day and previous 29 days. This limitation shall not apply unless there is sufficient runoff for sampling on at least three out of 30 consecutive days.

C. Land Discharge Specifications

Not Applicable.

D. Reclamation Specifications

Not Applicable.

V. RECEIVING WATER LIMITATIONS

A. Receiving water limitations are based on water quality objectives in the Basin Plan and are a required part of this Order. The discharges shall not cause the following in Suisun Bay and Carquinez Strait:

1. Floating, suspended, or deposited macroscopic particulate matter or foams;

2. Bottom deposits or aquatic growths to the extent that such deposits or growths cause nuisance or adversely affect beneficial uses;

3. Alteration of temperature, turbidity, or apparent color beyond present natural background levels;

4. Visible, floating, suspended, or deposited oil and other products of petroleum origin; and

5. Toxic or other deleterious substances to be present in concentrations or quantities which will cause deleterious effects on wildlife, waterfowl, or other aquatic biota, or which render any of these unfit for human consumption, either at levels created in the receiving waters or as a result of biological concentration.

B. The discharge of waste shall not cause the following limits to be exceeded in waters of the State within one foot of the water surface:

1. Dissolved Oxygen 7.0 mg/L, minimum

   The median dissolved oxygen concentration for any three consecutive months shall not be less than 80% of the dissolved oxygen content at saturation. When natural factors cause concentrations less than that specified above, the discharge shall not cause further reduction in ambient dissolved oxygen concentrations.

2. Dissolved Sulfide Natural background levels

3. pH 6.5 (minimum) to 8.5 (maximum)

C. The discharge shall not cause a violation of any water quality standard for receiving waters adopted by the Regional Water Board or the State Water Board as required by the CWA and regulations adopted thereunder. If more stringent applicable water quality standards are promulgated or approved, the Regional Water Board may revise and modify this Order in accordance with them.

VI. PROVISIONS

A. Standard Provisions

1. **Federal Standard Provisions.** The Discharger shall comply with Federal Standard Provisions included in Attachment D of this Order.

2. **Regional Standard Provisions.** The Discharger shall comply with all applicable items of the Regional Standard Provisions and Monitoring and Reporting Requirements included in Attachment G of this Order.

B. Monitoring and Reporting Program (MRP) Requirements

The Discharger shall comply with the MRP, and future revisions thereto, in Attachment E. The Discharger shall also comply with applicable sampling and reporting requirements in the standard provisions listed in VI.A, above.

C. Special Provisions

1. Reopener Provisions

The Regional Water Board may modify or reopen this Order prior to its expiration date in any of the following circumstances as allowed by law:

a. If present or future investigations demonstrate that the discharge governed by this Order will have, or will cease to have, a reasonable potential to cause or contribute to adverse impacts on water quality or beneficial uses of the receiving waters.

b. If new or revised WQOs or TMDLs come into effect for the San Francisco Bay estuary and contiguous water bodies (whether statewide, regional, or site-specific). In such cases, effluent limitations in this Order will be modified as necessary to be consistent with updated WQOs and wasteload allocations in TMDLs. Adoption of effluent limitations in this Order is not intended to restrict in any way future modifications based on legally adopted WQOs or TMDLs, or as otherwise permitted under federal regulations governing NPDES permit modifications.

c. If translator or other water quality studies provide a basis for determining that a permit condition should be modified.

d. If an administrative or judicial decision on a separate NPDES permit or WDR addresses requirements similar to this discharge.

e. Or as otherwise authorized by law.

The Discharger may request a permit modification based on the above. The Discharger shall include in any such request an antidegradation and anti-backsliding analysis.

2. Special Studies and Additional Monitoring

a. Effluent Characterization Study

The Discharger shall continue to monitor and evaluate the discharge from Discharge Point 001 (measured at EFF-001) according to the sampling frequency specified in the attached MRP (Attachment E). Compliance with this requirement shall be achieved in accordance with the specifications stated in the Regional Standard Provisions (Attachment G).

The Discharger shall evaluate on an annual basis if concentrations of any constituent increase over past performance. The Discharger shall investigate the cause of any increase. The investigation may include, but need not be limited to, an increase in the effluent monitoring frequency, monitoring of internal process streams, and monitoring of influent sources. This may be satisfied through identification of these constituents as "Pollutants of Concern" in the Discharger's Pollutant Minimization Program described in Provision VI.C.3.b, below. The Discharger shall provide a summary of the annual evaluation of data and source investigation activities in the annual self-monitoring report.

The Discharger shall submit a final report that presents all the data to the Regional Water Board no later than 180 days prior to this Order expiration date. This final report shall be submitted with the application for permit reissuance.

b. Ambient Background Receiving Water Study

The Discharger shall collect, or participate in collecting, ambient background receiving water priority pollutant monitoring data necessary to perform reasonable potential analyses and to calculate effluent limitations. The data on the conventional water quality parameters (pH, salinity, and hardness) shall also be sufficient to characterize these parameters in the receiving waters at a point after the discharge has mixed with the receiving waters. This provision may be met through monitoring through the Collaborative Bay Area Clean Water Agencies (BACWA) Study or a similar ambient monitoring program for San Francisco Bay. This Order may be reopened, as appropriate, to incorporate effluent limits or other requirements based on these data.

c. Effluent and Receiving Water Selenium Characterization Study

The Discharger shall implement effluent and receiving water selenium characterization studies as set forth in Table 13. The Discharger may complete, or cause to be completed, all or some of the required tasks collaboratively. All submittals shall be acceptable to the Executive Officer. Upon request by the Discharger, the Executive Officer may modify the deadlines for the following tasks by no more than three years if good cause exists, such as delays in data collection, sample collection, analytical turnaround, or receipt of third party reports; laboratory QA/QC problems; other factors outside the Discharger's control; or new information that warrants schedule modification. Any requests for schedule modification shall be in writing with necessary justification. Any approval shall also be in writing.

Table 13. Receiving Waters and Effluent Selenium Characterization Study Tasks and Schedule

Tasks	Compliance Date
1. Submit a study plan for a minimum two-year study that includes the following elements: (a) effluent and receiving water sampling locations (the effluent sampling location may be the existing effluent compliance sampling point; receiving water sampling locations shall be within a 100-foot radius of the outfall to characterize near-field concentrations and speciation); (b) receiving water sampling along transects from the Pacific Ocean (Golden Gate) to the Sacramento River (Rio Vista) and San Joaquin River (USGS Station 757), including sampling in the freshwater portions of the rivers at Vernalis (San Joaquin River) and Freeport (Sacramento River); (c) sampling and analysis protocols (including means to evaluate seasonal conditions under low and high flows from the Sacramento / San Joaquin River Delta, selenium concentrations in the water column and suspended particles, and speciation and particulate selenium content in the effluent); (d) comparison of the proposed protocols and analytical methods to previous sampling efforts; (e) sampling parameters (including, at a minimum, salinity, carbon, nitrogen, and chlorophyll-a in receiving water, and dissolved and particulate selenate, selenite, organic selenides, and elemental selenium concentrations in both effluent and receiving water); (f) data interpretation models and other methods to be used (representing	May 1, 2010

Tasks	Compliance Date
conservative, reasonable worst case conditions); and (g) implementation schedule.	
2. Begin implementation of the study plan developed for Task (1).	July 15, 2010
3. Submit a status report for Tasks 1 and 2 containing, at a minimum, monitoring data collected since the beginning of the study, summary of results to date, and necessary updates to the study plan	Annually on February 1, 2011, and February 1, 2012, with annual self-monitoring reports
4. Submit a final study report that includes the following elements: (a) sampling results, data interpretation, and conclusions, such as receiving water and mixing zone characterization, seasonal variability, etc.; (b) effluent characterization; (c) determination if there is reasonable potential for selenium in the discharge to violate the Basin Plan's narrative bioaccumulation objective through the use of pertinent models; (d) comparison of near-field selenium water column concentrations to applicable numeric objectives; (e) demonstration of spatial and temporal extent to which the objectives and other relevant guidelines are being exceeded; and (f) determination of whether selenium levels adversely affect food web or wildlife, or contributes to bioaccumulation.	August 15, 2012

3. Best Management Practices and Pollution Minimization

a. The Discharger shall continue to improve, in a manner acceptable to the Executive Officer, its Pollution Minimization Program (PMP) to promote minimization of pollutant loadings to the treatment plant and therefore to the receiving waters.

b. The Discharger shall submit an annual PMP report, acceptable to the Executive Officer, no later than February 28 of each year. Annual reports shall cover January through December of the preceding year. Annual reports shall contain the following information:

i. *A brief description of the treatment plant and treatment facilities.*

ii. *A discussion of the current pollutants of concern.* Periodically, the Discharger shall determine which pollutants are currently a problem and which pollutants may be potential future problems. This discussion shall include the reasons why the pollutants were chosen.

iii. *Identification of sources of pollutants of concern.* This discussion shall address how the Discharger identifies pollutant sources. The Discharger shall also identify sources or potential sources not directly within its ability or authority to control, such as pollutants in the potable water supply and air deposition.

iv. *Identification and implementation of measures to reduce the sources of pollutants of concern.* This discussion shall identify and prioritize tasks to address the Discharger's pollutants of concern. The Discharger may implement tasks themselves or participate in group, regional, or national tasks that will address its pollutants of concern whenever it is efficient and appropriate to do so. A time line shall be included for the implementation of each task.

v. *Outreach to employees.* The Discharger shall inform its employees regarding pollutants of concern, potential sources, and how they might be able to help reduce discharge of these pollutants. The Discharger may provide a forum for employees to provide input to the program.

vi. *Discussion of criteria used to measure the PMP's and tasks' effectiveness.* The Discharger shall establish criteria to evaluate the effectiveness of its PMP. This discussion shall address specific criteria used to measure the effectiveness of each of the tasks in sections VI.C.3.b.iv and v.

vii. *Documentation of efforts and progress.* This discussion shall detail all of the Discharger's activities in the PMP during the reporting year.

viii. *Evaluation of the PMP's and tasks' effectiveness.* The Discharger shall use the criteria established in section VI.C.3.b.vi above to evaluate the PMP's and tasks' effectiveness.

ix. *Identification of specific tasks and time schedules for future efforts.* Based on the evaluation, the Discharger shall describe how it will continue or change its PMP tasks to more effectively reduce the loading of pollutants to the treatment plant and therefore in its effluent.

c. The Discharger shall develop and conduct a PMP as further described below when there is evidence that a priority pollutant is present in the effluent above an effluent limitation and either:

i. A sample result is reported as DNQ and the effluent limitation is less than the reporting limit (RL); or

ii. A sample result is reported as not detected (ND) and the effluent limitation is less than the MDL, using SIP definitions.

d. If triggered by the reasons in c., above, the Discharger's PMP shall include, but not be limited to, the following actions and submittals acceptable to the Regional Water Board:

i. An annual review and semi-annual monitoring of potential sources of the reportable priority pollutants, which may include fish tissue monitoring and other bio-uptake sampling, or alternative measures approved by the Executive Officer when it is demonstrated that source monitoring is unlikely to produce useful analytical data;

ii. Quarterly monitoring for the reportable priority pollutants in the influent to the wastewater treatment system, or an alternative measure approved by the Executive

Officer when it is demonstrated that influent monitoring is unlikely to produce useful analytical data;

iii. Submittal of a control strategy designed to proceed toward the goal of maintaining concentrations of the reportable priority pollutants in the effluent at or below the effluent limitation;

iv. Implementation of appropriate cost-effective control measures for the reportable priority pollutants, consistent with the control strategy; and

v. The annual report required by section VI.C.3.b above shall specifically address the following items:

(a) All PMP monitoring results for the previous year;

(b) A list of potential sources of the reportable priority pollutants;

(c) A summary of all actions undertaken pursuant to the control strategy; and

(d) A description of actions to be taken in the following year.

4. Other Special Provisions

a. Cyanide Action Plan

The Discharger shall implement monitoring and surveillance, pretreatment, source control, and pollution prevention for cyanide in accordance with the following tasks and time schedule.

Table 14. Cyanide Action Plan

Task	Compliance Date
1. Review Potential Cyanide Contributors The Discharger shall submit an inventory of potential sources of cyanide to the treatment plant.	June 9, 2010
2. Implement Cyanide Control Program The Discharger shall submit a plan and begin implementation of a program to minimize cyanide discharges to its treatment plant. The plan shall include, at a minimum, the following elements: a. Inspect each potential source to assess the need to include that contributing source in the control program. b. Prepare an emergency monitoring and response plan to be implemented if a significant cyanide discharge occurs.	With the annual pollution prevention report due in 2011
3. Implement Additional Cyanide Control Measures If the Discharger is notified by the Regional Water Board that ambient monitoring shows cyanide concentrations of 1.0 µg/L or higher in the main body of San Francisco Bay, then within 90 days of the notification, the Discharger shall commence with actions to identify and abate cyanide sources responsible for the elevated ambient concentrations.	Within 90 days of notification

Task	Compliance Date
4. Report Status of Cyanide Control Program Submit a report to the Regional Water Board documenting implementation of the cyanide control program and addressing the effectiveness of actions taken, including any additional cyanide controls that are required by Task 3 above, together with a schedule for actions to be taken in the next 12 months.	With the annual pollution prevention report due each year starting with the 2011 report

b. Copper Action Plan

The Discharger shall implement pretreatment, source control, and pollution prevention for copper in accordance with the following tasks and time schedule.

Table 15. Copper Action Plan

Task	Compliance Date
1. Review Potential Copper Sources The Discharger shall submit an inventory of potential copper sources to the discharge from Discharge Point 001.	With the annual pollution prevention report due in 2011
2. Implement Copper Control Program The Discharger shall submit a plan for and begin implementation of a program to reduce copper discharges identified in Task 1.	July 1, 2011
3. Implement Additional Measures If the Discharger is notified by the Regional Water Board that the three-year rolling mean dissolved copper concentration of the receiving water exceeds 2.8 µg/L, then within 90 days of this notification, the Discharger shall evaluate its effluent copper concentration trend, and if it is increasing, develop and implement additional measures to control copper discharges.	Within 90 days of the notification
4. Studies to Reduce Copper Pollutant Impact Uncertainties The Discharger shall submit a study plan and schedule to conduct or cause to be conducted technical studies to investigate possible copper sediment toxicity and technical studies to investigate sublethal effects on salmonids. Specifically, the Discharger shall include the manner in which the above will be accomplished and describe the studies to be performed with an implementation schedule. To satisfy this requirement, the Discharger may collaborate and conduct these studies as a group.	With the annual pollution prevention report due in 2011
5. Report Status of Copper Control Program The Discharger shall submit a report to the Regional Water Board documenting implementation of the copper control program and addressing the effectiveness of actions taken, including any additional copper controls that are required by Task 3 above, together with a schedule for actions to be taken in the next 12 months.	Annually with annual PMP reports due February 28

c. Storm Water Pollution Prevention Plan and Annual Report

By October 1, 2010, the Discharger shall submit an updated Storm Water Pollution Prevention Plan (SWPPP). To address elevated levels of TSS in storm water runoff, the

Discharger's SWPPP shall propose measures (e.g., riprap, soil removal, or installation of hay bales) and an implementation schedule to minimize solids in storm water runoff.

In subsequent years, the Discharger shall update and submit an updated SWPPP acceptable to the Executive Officer by October 1. If the Discharger determines that it does not need to update its SWPPP, it shall submit a letter to the Executive Officer indicating that no revisions are necessary and stating the last year it updated its SWPPP. The Discharger shall implement the SWPPP. The SWPPP shall comply with the requirements in the Federal Standard Provisions (Attachment D).

The Discharger shall submit an annual storm water report by July 1 of each year covering data for the previous wet weather season for the identified storm water discharge points. The annual storm water report shall, at a minimum, include:

(a) a tabulated summary of all sampling results and a summary of visual observations taken during inspections;

(b) a comprehensive discussion of the compliance record and any corrective actions taken or planned to ensure compliance with WDRs; and

(c) a comprehensive discussion of source identification and control programs for total suspended solids.

ATTACHMENT A – DEFINITIONS

Arithmetic Mean (μ), also called the average, is the sum of measured values divided by the number of samples. For ambient water concentrations, the arithmetic mean is calculated as follows:

> Arithmetic mean = $\mu = \Sigma x / n$ where: Σx is the sum of the measured ambient water concentrations, and n is the number of samples.

Average Monthly Effluent Limitation (AMEL): the highest allowable average of daily discharges over a calendar month, calculated as the sum of all daily discharges measured during a calendar month divided by the number of daily discharges measured during that month.

Average Weekly Effluent Limitation (AWEL): the highest allowable average of daily discharges over a calendar week (Sunday through Saturday), calculated as the sum of all daily discharges measured during a calendar week divided by the number of daily discharges measured during that week.

Bioaccumulative pollutants are those substances taken up by an organism from its surrounding medium through gill membranes, epithelial tissue, or from food and subsequently concentrated and retained in the body of the organism.

Carcinogenic pollutants are substances that are known to cause cancer in living organisms.

Coefficient of Variation (*CV*) is a measure of the data variability and is calculated as the estimated standard deviation divided by the arithmetic mean of the observed values.

Daily Discharge: Daily Discharge is defined as either: (1) the total mass of the constituent discharged over the calendar day (12:00 am through 11:59 pm) or any 24-hour period that reasonably represents a calendar day for purposes of sampling (as specified in this Order), for a constituent with limitations expressed in units of mass or; (2) the unweighted arithmetic mean measurement of the constituent over the day for a constituent with limitations expressed in other units of measurement (e.g., concentration).

The daily discharge may be determined by the analytical results of a composite sample taken over the course of one day (a calendar day or other 24-hour period defined as a day) or by the arithmetic mean of analytical results from one or more grab samples taken over the course of the day.

For composite sampling, if 1 day is defined as a 24-hour period other than a calendar day, the analytical result for the 24-hour period will be considered as the result for the calendar day in which the 24-hour period ends.

Detected, but Not Quantified (DNQ) are those sample results less than the RL, but greater than or equal to the laboratory's MDL.

Dilution Credit is the amount of dilution granted to a discharge in the calculation of a water quality-based effluent limitation, based on the allowance of a specified mixing zone. It is calculated from the dilution ratio or determined through conducting a mixing zone study or modeling of the discharge and receiving water.

Effluent Concentration Allowance (ECA) is a value derived from the water quality criterion/objective, dilution credit, and ambient background concentration that is used, in conjunction with the coefficient of

variation for the effluent monitoring data, to calculate a long-term average (LTA) discharge concentration. The ECA has the same meaning as wasteload allocation (WLA) as used in USEPA guidance (Technical Support Document For Water Quality-based Toxics Control, March 1991, second printing, EPA/505/2-90-001).

Enclosed Bays means indentations along the coast that enclose an area of oceanic water within distinct headlands or harbor works. Enclosed bays include all bays where the narrowest distance between the headlands or outermost harbor works is less than 75 percent of the greatest dimension of the enclosed portion of the bay. Enclosed bays include, but are not limited to, Humboldt Bay, Bodega Harbor, Tomales Bay, Drake's Estero, San Francisco Bay, Morro Bay, Los Angeles-Long Beach Harbor, Upper and Lower Newport Bay, Mission Bay, and San Diego Bay. Enclosed bays do not include inland surface waters or ocean waters.

Estimated Chemical Concentration is the estimated chemical concentration that results from the confirmed detection of the substance by the analytical method below the ML value.

Estuaries means waters, including coastal lagoons, located at the mouths of streams that serve as areas of mixing for fresh and ocean waters. Coastal lagoons and mouths of streams that are temporarily separated from the ocean by sandbars shall be considered estuaries. Estuarine waters shall be considered to extend from a bay or the open ocean to a point upstream where there is no significant mixing of fresh water and seawater. Estuarine waters include, but are not limited to, the Sacramento-San Joaquin Delta, as defined in California Water Code section 12220, Suisun Bay, Carquinez Strait downstream to the Carquinez Bridge, and appropriate areas of the Smith, Mad, Eel, Noyo, Russian, Klamath, San Diego, and Otay rivers. Estuaries do not include inland surface waters or ocean waters.

Inland Surface Waters are all surface waters of the State that do not include the ocean, enclosed bays, or estuaries.

Instantaneous Maximum Effluent Limitation: the highest allowable value for any single grab sample or aliquot (i.e., each grab sample or aliquot is independently compared to the instantaneous maximum limitation).

Instantaneous Minimum Effluent Limitation: the lowest allowable value for any single grab sample or aliquot (i.e., each grab sample or aliquot is independently compared to the instantaneous minimum limitation).

Maximum Daily Effluent Limitation (MDEL) means the highest allowable daily discharge of a pollutant, over a calendar day (or 24-hour period). For pollutants with limitations expressed in units of mass, the daily discharge is calculated as the total mass of the pollutant discharged over the day. For pollutants with limitations expressed in other units of measurement, the daily discharge is calculated as the arithmetic mean measurement of the pollutant over the day.

Median is the middle measurement in a set of data. The median of a set of data is found by first arranging the measurements in order of magnitude (either increasing or decreasing order). If the number of measurements (n) is odd, then the median = $X_{(n+1)/2}$. If n is even, then the median = $(X_{n/2} + X_{(n/2)+1})/2$ (i.e., the midpoint between the $n/2$ and $n/2+1$).

Method Detection Limit (MDL) is the minimum concentration of a substance that can be measured and reported with 99 percent confidence that the analyte concentration is greater than zero, as defined in title 40 of the Code of Federal Regulations, Part 136, Attachment B, revised as of July 3, 1999.

Minimum Level (ML) is the concentration at which the entire analytical system must give a recognizable signal and acceptable calibration point. The ML is the concentration in a sample that is equivalent to the concentration of the lowest calibration standard analyzed by a specific analytical procedure, assuming that all the method specified sample weights, volumes, and processing steps have been followed.

Mixing Zone is a limited volume of receiving water that is allocated for mixing with a wastewater discharge where water quality criteria can be exceeded without causing adverse effects to the overall water body.

Not Detected (ND) are those sample results less than the laboratory's MDL.

Ocean Waters are the territorial marine waters of the State as defined by California law to the extent these waters are outside of enclosed bays, estuaries, and coastal lagoons. Discharges to ocean waters are regulated in accordance with the State Water Board's California Ocean Plan.

Persistent pollutants are substances for which degradation or decomposition in the environment is nonexistent or very slow.

Pollutant Minimization Program (PMP) means waste minimization and pollution prevention actions that include, but are not limited to, product substitution, waste stream recycling, alternative waste management methods, and education of the public and businesses. The goal of the PMP shall be to reduce all potential sources of a priority pollutant(s) through pollutant minimization (control) strategies, including pollution prevention measures as appropriate, to maintain the effluent concentration at or below the water quality-based effluent limitation. Pollution prevention measures may be particularly appropriate for persistent bioaccumulative priority pollutants where there is evidence that beneficial uses are being impacted. The Regional Water Board may consider cost effectiveness when establishing the requirements of a PMP. The completion and implementation of a Pollution Prevention Plan, if required pursuant to California Water Code section 13263.3(d), shall be considered to fulfill the PMP requirements.

Pollution Prevention means any action that causes a net reduction in the use or generation of a hazardous substance or other pollutant that is discharged into water and includes, but is not limited to, input change, operational improvement, production process change, and product reformulation (as defined in California Water Code section 13263.3). Pollution prevention does not include actions that merely shift a pollutant in wastewater from one environmental medium to another environmental medium, unless clear environmental benefits of such an approach are identified to the satisfaction of the State or Regional Water Board.

Reporting Level (RL) is the ML (and its associated analytical method) chosen by the Discharger for reporting and compliance determination from the MLs included in this Order. The MLs included in this Order correspond to approved analytical methods for reporting a sample result that are selected by the Regional Water Board either from SIP Appendix 4 in accordance with SIP section 2.4.2 or established in accordance with SIP section 2.4.3. The ML is based on the proper application of method-based analytical procedures for sample preparation and the absence of any matrix interferences. Other factors

may be applied to the ML depending on the specific sample preparation steps employed. For example, the treatment typically applied in cases where there are matrix-effects is to dilute the sample or sample aliquot by a factor of ten. In such cases, this additional factor must be applied to the ML in the computation of the RL.

Satellite Collection System is the portion, if any, of a sanitary sewer system owned or operated by a different public agency than the agency that owns and operates the wastewater treatment facility that a sanitary sewer system is tributary to.

Source of Drinking Water is any water designated as municipal or domestic supply (MUN) in a Regional Water Board Basin Plan.

Standard Deviation (σ) is a measure of variability that is calculated as follows:

$$\sigma = (\sum[(x - \mu)^2]/(n - 1))^{0.5}$$

where:
x is the observed value;
μ is the arithmetic mean of the observed values; and
n is the number of samples.

Toxicity Reduction Evaluation (TRE) is a study conducted in a step-wise process designed to identify the causative agents of effluent or ambient toxicity, isolate the sources of toxicity, evaluate the effectiveness of toxicity control options, and then confirm the reduction in toxicity. The first steps of the TRE consist of the collection of data relevant to the toxicity, including additional toxicity testing, and an evaluation of facility operations and maintenance practices, and best management practices. A Toxicity Identification Evaluation (TIE) may be required as part of the TRE, if appropriate. (A TIE is a set of procedures to identify the specific chemical(s) responsible for toxicity. These procedures are performed in three phases (characterization, identification, and confirmation) using aquatic organism toxicity tests.)

ATTACHMENT B – FACILITY MAP

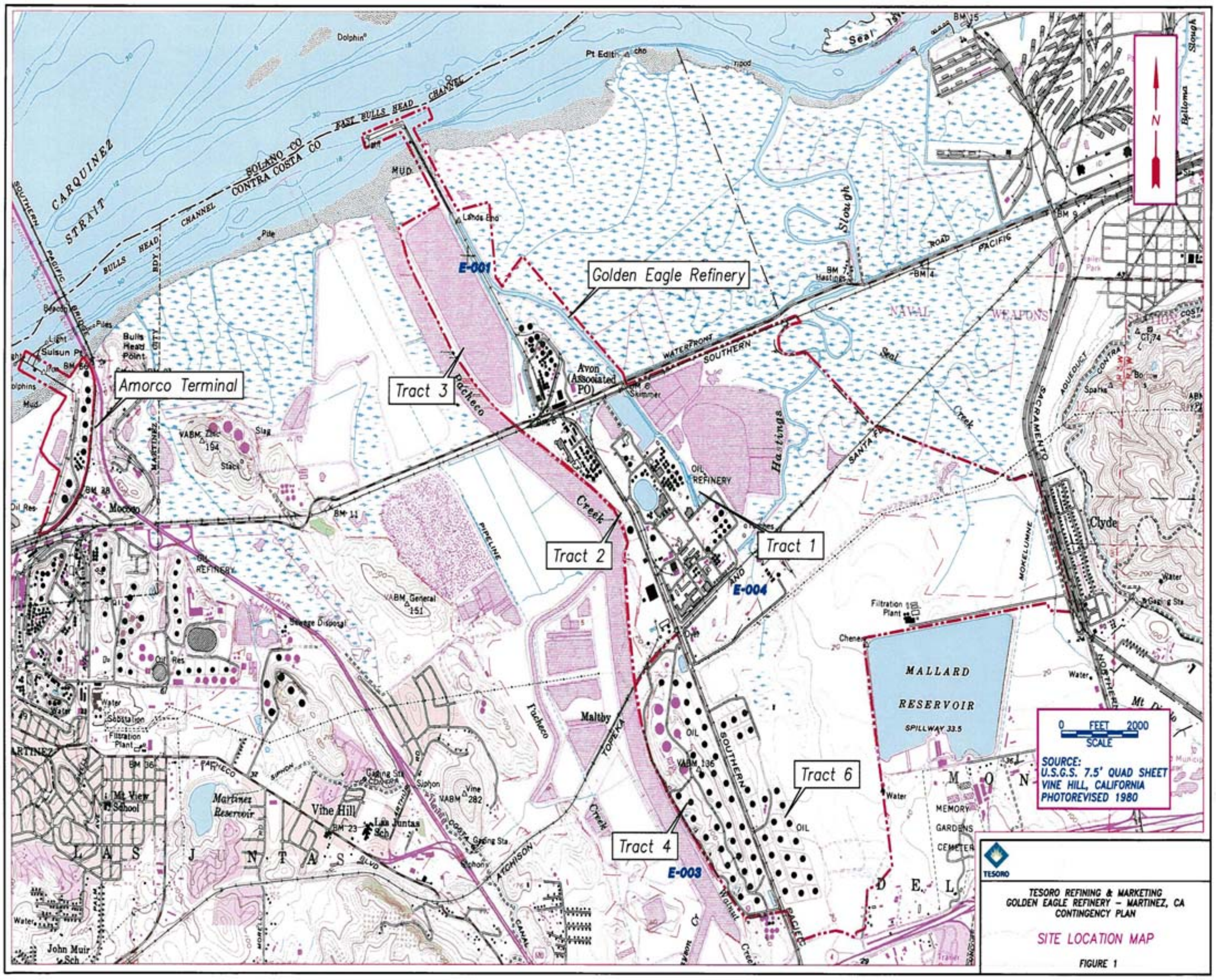

ATTACHMENT C – PROCESS FLOW DIAGRAM

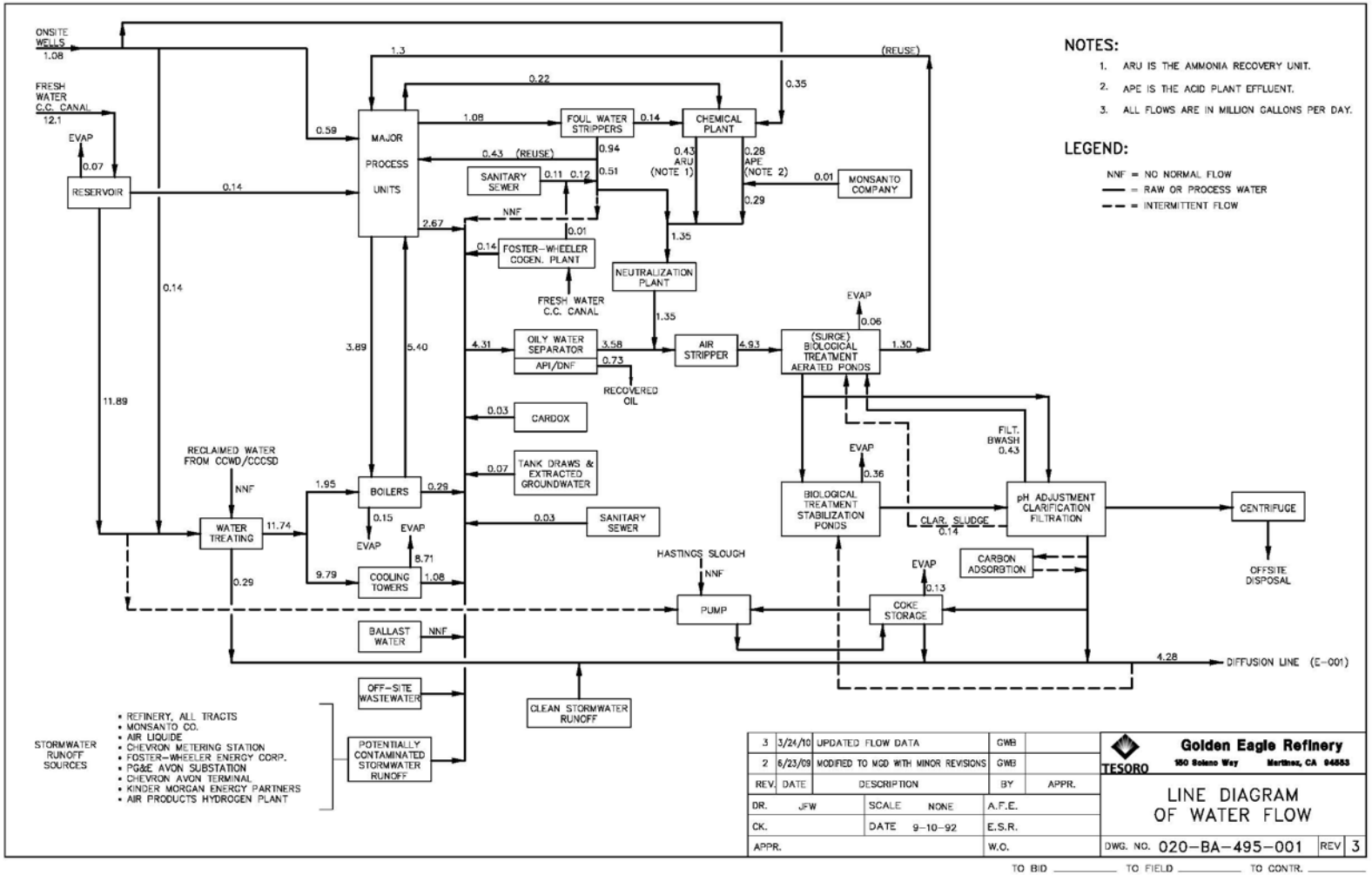

ATTACHMENT D – FEDERAL STANDARD PROVISIONS

I. STANDARD PROVISIONS – PERMIT COMPLIANCE

A. Duty to Comply

1. The Discharger must comply with all of the conditions of this Order. Any noncompliance constitutes a violation of the Clean Water Act (CWA) and the California Water Code and is grounds for enforcement action, for permit termination, revocation and reissuance, or modification; or denial of a permit renewal application. (40 C.F.R. § 122.41(a).)

2. The Discharger shall comply with effluent standards or prohibitions established under section 307(a) of the CWA for toxic pollutants and with standards for sewage sludge use or disposal established under section 405(d) of the CWA within the time provided in the regulations that establish these standards or prohibitions, even if this Order has not yet been modified to incorporate the requirement. (40 C.F.R. § 122.41(a)(1).)

B. Need to Halt or Reduce Activity Not a Defense

It shall not be a defense for a Discharger in an enforcement action that it would have been necessary to halt or reduce the permitted activity in order to maintain compliance with the conditions of this Order. (40 C.F.R. § 122.41(c).)

C. Duty to Mitigate

The Discharger shall take all reasonable steps to minimize or prevent any discharge or sludge use or disposal in violation of this Order that has a reasonable likelihood of adversely affecting human health or the environment. (40 C.F.R. § 122.41(d).)

D. Proper Operation and Maintenance

The Discharger shall at all times properly operate and maintain all facilities and systems of treatment and control (and related appurtenances) which are installed or used by the Discharger to achieve compliance with the conditions of this Order. Proper operation and maintenance also includes adequate laboratory controls and appropriate quality assurance procedures. This provision requires the operation of backup or auxiliary facilities or similar systems that are installed by a Discharger only when necessary to achieve compliance with the conditions of this Order (40 C.F.R. § 122.41(e)).

E. Property Rights

1. This Order does not convey any property rights of any sort or any exclusive privileges. (40 C.F.R. § 122.41(g).)

2. The issuance of this Order does not authorize any injury to persons or property or invasion of other private rights, or any infringement of State or local law or regulations. (40 C.F.R. § 122.5(c).)

F. Inspection and Entry

The Discharger shall allow the Regional Water Board, State Water Board, United States Environmental Protection Agency (USEPA), or their authorized representatives (including an authorized contractor acting as their representative), upon the presentation of credentials and other documents, as may be required by law, to (40 C.F.R. § 122.41(i); Wat. Code, § 13383):

1. Enter upon the Discharger's premises where a regulated facility or activity is located or conducted, or where records are kept under the conditions of this Order (40 C.F.R. § 122.41(i)(1));

2. Have access to and copy, at reasonable times, any records that must be kept under the conditions of this Order (40 C.F.R. § 122.41(i)(2));

3. Inspect and photograph, at reasonable times, any facilities, equipment (including monitoring and control equipment), practices, or operations regulated or required under this Order (40 C.F.R. § 122.41(i)(3)); and

4. Sample or monitor, at reasonable times, for the purposes of assuring Order compliance or as otherwise authorized by the CWA or the Water Code, any substances or parameters at any location. (40 C.F.R. § 122.41(i)(4).)

G. Bypass

1. Definitions

   a. "Bypass" means the intentional diversion of waste streams from any portion of a treatment facility. (40 C.F.R. § 122.41(m)(1)(i).)

   b. "Severe property damage" means substantial physical damage to property, damage to the treatment facilities, which causes them to become inoperable, or substantial and permanent loss of natural resources that can reasonably be expected to occur in the absence of a bypass. Severe property damage does not mean economic loss caused by delays in production. (40 C.F.R. § 122.41(m)(1)(ii).)

2. Bypass not exceeding limitations. The Discharger may allow any bypass to occur which does not cause exceedances of effluent limitations, but only if it is for essential maintenance to assure efficient operation. These bypasses are not subject to the provisions listed in Standard Provisions – Permit Compliance I.G.3, I.G.4, and I.G.5 below. (40 C.F.R. § 122.41(m)(2).)

3. Prohibition of bypass. Bypass is prohibited, and the Regional Water Board may take enforcement action against a Discharger for bypass, unless (40 C.F.R. § 122.41(m)(4)(i)):

   a. Bypass was unavoidable to prevent loss of life, personal injury, or severe property damage (40 C.F.R. § 122.41(m)(4)(i)(A));

   b. There were no feasible alternatives to the bypass, such as the use of auxiliary treatment facilities, retention of untreated wastes, or maintenance during normal periods of equipment downtime. This condition is not satisfied if adequate back-up equipment

should have been installed in the exercise of reasonable engineering judgment to prevent a bypass that occurred during normal periods of equipment downtime or preventive maintenance (40 C.F.R. § 122.41(m)(4)(i)(B)); and

c. The Discharger submitted notice to the Regional Water Board as required under Standard Provisions – Permit Compliance I.G.5 below. (40 C.F.R. § 122.41(m)(4)(i)(C).)

4. The Regional Water Board may approve an anticipated bypass, after considering its adverse effects, if the Regional Water Board determines that it will meet the three conditions listed in Standard Provisions – Permit Compliance I.G.3 above. (40 C.F.R. § 122.41(m)(4)(ii).)

5. Notice

a. Anticipated bypass. If the Discharger knows in advance of the need for a bypass, it shall submit a notice, if possible at least 10 days before the date of the bypass. (40 C.F.R. § 122.41(m)(3)(i).)

b. Unanticipated bypass. The Discharger shall submit notice of an unanticipated bypass as required in Standard Provisions - Reporting V.E below (24-hour notice). (40 C.F.R. § 122.41(m)(3)(ii).)

H. Upset

Upset means an exceptional incident in which there is unintentional and temporary noncompliance with technology based permit effluent limitations because of factors beyond the reasonable control of the Discharger. An upset does not include noncompliance to the extent caused by operational error, improperly designed treatment facilities, inadequate treatment facilities, lack of preventive maintenance, or careless or improper operation. (40 C.F.R. § 122.41(n)(1).)

1. Effect of an upset. An upset constitutes an affirmative defense to an action brought for noncompliance with such technology based permit effluent limitations if the requirements of Standard Provisions – Permit Compliance I.H.2 below are met. No determination made during administrative review of claims that noncompliance was caused by upset, and before an action for noncompliance, is final administrative action subject to judicial review. (40 C.F.R. § 122.41(n)(2).).

2. Conditions necessary for a demonstration of upset. A Discharger who wishes to establish the affirmative defense of upset shall demonstrate, through properly signed, contemporaneous operating logs or other relevant evidence that (40 C.F.R. § 122.41(n)(3)):

a. An upset occurred and that the Discharger can identify the cause(s) of the upset (40 C.F.R. § 122.41(n)(3)(i));

b. The permitted facility was, at the time, being properly operated (40 C.F.R. § 122.41(n)(3)(ii));

c. The Discharger submitted notice of the upset as required in Standard Provisions – Reporting V.E.2.b below (24-hour notice) (40 C.F.R. § 122.41(n)(3)(iii)); and

d. The Discharger complied with any remedial measures required under Standard Provisions – Permit Compliance I.C above. (40 C.F.R. § 122.41(n)(3)(iv).)

3. Burden of proof. In any enforcement proceeding, the Discharger seeking to establish the occurrence of an upset has the burden of proof. (40 C.F.R. § 122.41(n)(4).)

II. STANDARD PROVISIONS – PERMIT ACTION

A. General

This Order may be modified, revoked and reissued, or terminated for cause. The filing of a request by the Discharger for modification, revocation and reissuance, or termination, or a notification of planned changes or anticipated noncompliance does not stay any Order condition. (40 C.F.R. § 122.41(f).)

B. Duty to Reapply

If the Discharger wishes to continue an activity regulated by this Order after the expiration date of this Order, the Discharger must apply for and obtain a new permit. (40 C.F.R. § 122.41(b).)

C. Transfers

This Order is not transferable to any person except after notice to the Regional Water Board. The Regional Water Board may require modification or revocation and reissuance of this Order to change the name of the Discharger and incorporate such other requirements as may be necessary under the CWA and the Water Code. (40 C.F.R. § 122.41(l)(3); § 122.61.)

III. STANDARD PROVISIONS – MONITORING

A. Samples and measurements taken for the purpose of monitoring shall be representative of the monitored activity. (40 C.F.R. § 122.41(j)(1).)

B. Monitoring results must be conducted according to test procedures under Part 136 or, in the case of sludge use or disposal, approved under Part 136 unless otherwise specified in Part 503 unless other test procedures have been specified in this Order. (40 C.F.R. § 122.41(j)(4); § 122.44(i)(1)(iv).)

IV. STANDARD PROVISIONS – RECORDS

A. Except for records of monitoring information required by this Order related to the Discharger's sewage sludge use and disposal activities, which shall be retained for a period of at least five years (or longer as required by Part 503), the Discharger shall retain records of all monitoring information, including all calibration and maintenance records and all original strip chart recordings for continuous monitoring instrumentation, copies of all reports required by this Order, and records of all data used to complete the application for this Order, for a period of at least three (3) years from the date of the sample, measurement, report or application. This period may be extended by request of the Regional Water Board Executive Officer at any time. (40 C.F.R. § 122.41(j)(2).)

B. Records of monitoring information shall include:

1. The date, exact place, and time of sampling or measurements (40 C.F.R. § 122.41(j)(3)(i));

2. The individual(s) who performed the sampling or measurements (40 C.F.R. § 122.41(j)(3)(ii));

3. The date(s) analyses were performed (40 C.F.R. § 122.41(j)(3)(iii));

4. The individual(s) who performed the analyses (40 C.F.R. § 122.41(j)(3)(iv));

5. The analytical techniques or methods used (40 C.F.R. § 122.41(j)(3)(v)); and

6. The results of such analyses. (40 C.F.R. § 122.41(j)(3)(vi).)

C. Claims of confidentiality for the following information will be denied (40 C.F.R. § 122.7(b)):

1. The name and address of any permit applicant or Discharger (40 C.F.R. § 122.7(b)(1)); and

2. Permit applications and attachments, permits and effluent data. (40 C.F.R. § 122.7(b)(2).)

V. STANDARD PROVISIONS – REPORTING

A. Duty to Provide Information

The Discharger shall furnish to the Regional Water Board, State Water Board, or USEPA within a reasonable time, any information which the Regional Water Board, State Water Board, or USEPA may request to determine whether cause exists for modifying, revoking and reissuing, or terminating this Order or to determine compliance with this Order. Upon request, the Discharger shall also furnish to the Regional Water Board, State Water Board, or USEPA copies of records required to be kept by this Order. (40 C.F.R. § 122.41(h); Wat. Code, § 13267.)

B. Signatory and Certification Requirements

1. All applications, reports, or information submitted to the Regional Water Board, State Water Board, or USEPA shall be signed and certified in accordance with Standard Provisions – Reporting V.B.2, V.B.3, V.B.4, and V.B.5 below. (40 C.F.R. § 122.41(k))

2. All permit applications shall be signed by a responsible corporate officer. For purposes of this provision, a responsible corporate officer means: (i) A president, secretary, treasurer, or vice-president of the corporation in charge of a principal business function, or any other person who performs similar policy- or decision-making functions for the corporation, or (ii) the manager of one or more manufacturing, production, or operating facilities, provided, the manager is authorized to make management decisions which govern the operation of the regulated facility including having the explicit or implicit duty of making major capital investment recommendations, and initiating and directing other comprehensive measures to assure ling term environmental compliance with environmental laws and regulations; the manager can ensure that the necessary systems are established or actions taken to gather complete and accurate information for permit application requirements; and where authority to sign documents has been assigned or delegated to the manager in accordance with corporate procedures. (40 C.F.R. § 122.22(a)(1))

3. All reports required by this Order and other information requested by the Regional Water Board, State Water Board, or USEPA shall be signed by a person described in Standard

Provisions – Reporting V.B.2 above, or by a duly authorized representative of that person. A person is a duly authorized representative only if:

a. The authorization is made in writing by a person described in Standard Provisions – Reporting V.B.2 above (40 C.F.R. § 122.22(b)(1));

b. The authorization specifies either an individual or a position having responsibility for the overall operation of the regulated facility or activity such as the position of plant manager, operator of a well or a well field, superintendent, position of equivalent responsibility, or an individual or position having overall responsibility for environmental matters for the company. (A duly authorized representative may thus be either a named individual or any individual occupying a named position.) (40 C.F.R. § 122.22(b)(2)); and

c. The written authorization is submitted to the Regional Water Board and State Water Board. (40 C.F.R. § 122.22(b)(3).)

4. If an authorization under Standard Provisions – Reporting V.B.3 above is no longer accurate because a different individual or position has responsibility for the overall operation of the facility, a new authorization satisfying the requirements of Standard Provisions – Reporting V.B.3 above must be submitted to the Regional Water Board and State Water Board prior to or together with any reports, information, or applications, to be signed by an authorized representative. (40 C.F.R. § 122.22(c).)

5. Any person signing a document under Standard Provisions – Reporting V.B.2 or V.B.3 above shall make the following certification:

   "I certify under penalty of law that this document and all attachments were prepared under my direction or supervision in accordance with a system designed to assure that qualified personnel properly gather and evaluate the information submitted. Based on my inquiry of the person or persons who manage the system or those persons directly responsible for gathering the information, the information submitted is, to the best of my knowledge and belief, true, accurate, and complete. I am aware that there are significant penalties for submitting false information, including the possibility of fine and imprisonment for knowing violations." (40 C.F.R. § 122.22(d).)

C. Monitoring Reports

1. Monitoring results shall be reported at the intervals specified in the Monitoring and Reporting Program (Attachment E) in this Order. (40 C.F.R. § 122.22(l)(4).)

2. Monitoring results must be reported on a Discharge Monitoring Report (DMR) form or forms provided or specified by the Regional Water Board or State Water Board for reporting results of monitoring of sludge use or disposal practices. (40 C.F.R. § 122.41(l)(4)(i).)

3. If the Discharger monitors any pollutant more frequently than required by this Order using test procedures approved under Part 136 or, in the case of sludge use or disposal, approved under Part 136 unless otherwise specified in Part 503, or as specified in this Order, the results of this monitoring shall be included in the calculation and reporting of the data submitted in

the DMR or sludge reporting form specified by the Regional Water Board. (40 C.F.R. § 122.41(l)(4)(ii).)

4. Calculations for all limitations, which require averaging of measurements, shall utilize an arithmetic mean unless otherwise specified in this Order. (40 C.F.R. § 122.41(l)(4)(iii).)

D. Compliance Schedules

Reports of compliance or noncompliance with, or any progress reports on, interim and final requirements in any compliance schedule of this Order, shall be submitted no later than 14 days following each schedule date. (40 C.F.R. § 122.41(l)(5).)

E. Twenty-Four Hour Reporting

1. The Discharger shall report any noncompliance that may endanger health or the environment. Any information shall be provided orally within 24 hours from the time the Discharger becomes aware of the circumstances. A written submission shall also be provided within five (5) days of the time the Discharger becomes aware of the circumstances. The written submission shall contain a description of the noncompliance and its cause; the period of noncompliance, including exact dates and times, and if the noncompliance has not been corrected, the anticipated time it is expected to continue; and steps taken or planned to reduce, eliminate, and prevent reoccurrence of the noncompliance. (40 C.F.R. § 122.41(l)(6)(i).)

2. The following shall be included as information that must be reported within 24 hours under this paragraph (40 C.F.R. § 122.41(l)(6)(ii)):

   a. Any unanticipated bypass that exceeds any effluent limitation in this Order. (40 C.F.R. § 122.41(l)(6)(ii)(A).)

   b. Any upset that exceeds any effluent limitation in this Order. (40 C.F.R. § 122.41(l)(6)(ii)(B).)

3. The Regional Water Board may waive the above-required written report under this provision on a case-by-case basis if an oral report has been received within 24 hours. (40 C.F.R. § 122.41(l)(6)(iii).)

F. Planned Changes

The Discharger shall give notice to the Regional Water Board as soon as possible of any planned physical alterations or additions to the permitted facility. Notice is required under this provision only when (40 C.F.R. § 122.41(l)(1)):

1. The alteration or addition to a permitted facility may meet one of the criteria for determining whether a facility is a new source in section 122.29(b) (40 C.F.R. § 122.41(l)(1)(i)); or

2. The alteration or addition could significantly change the nature or increase the quantity of pollutants discharged. This notification applies to pollutants that are not subject to effluent limitations in this Order. (40 C.F.R. § 122.41(l)(1)(ii).)

3. The alteration or addition results in a significant change in the Discharger's sludge use or disposal practices, and such alteration, addition, or change may justify the application of permit conditions that are different from or absent in the existing permit, including notification of additional use or disposal sites not reported during the permit application process or not reported pursuant to an approved land application plan. (40 C.F.R.§ 122.41(l)(1)(iii).)

G. Anticipated Noncompliance

The Discharger shall give advance notice to the Regional Water Board or State Water Board of any planned changes in the permitted facility or activity that may result in noncompliance with General Order requirements. (40 C.F.R. § 122.41(l)(2).)

H. Other Noncompliance

The Discharger shall report all instances of noncompliance not reported under Standard Provisions – Reporting V.C, V.D, and V.E above at the time monitoring reports are submitted. The reports shall contain the information listed in Standard Provision – Reporting V.E above. (40 C.F.R. § 122.41(l)(7).)

I. Other Information

When the Discharger becomes aware that it failed to submit any relevant facts in a permit application, or submitted incorrect information in a permit application or in any report to the Regional Water Board, State Water Board, or USEPA, the Discharger shall promptly submit such facts or information. (40 C.F.R. § 122.41(l)(8).)

VI. STANDARD PROVISIONS – ENFORCEMENT

A. The Regional Water Board is authorized to enforce the terms of this Order under several provisions of the Water Code, including, but not limited to, sections 13385, 13386, and 13387.

VII. ADDITIONAL PROVISIONS – NOTIFICATION LEVELS

A. Non-Municipal Facilities

Existing manufacturing, commercial, mining, and silvicultural Dischargers shall notify the Regional Water Board as soon as they know or have reason to believe (40 C.F.R. § 122.42(a)):

1. That any activity has occurred or will occur that would result in the discharge, on a routine or frequent basis, of any toxic pollutant that is not limited in this Order, if that discharge will exceed the highest of the following "notification levels" (40 C.F.R. § 122.42(a)(1)):

a. 100 micrograms per liter (µg/L) (40 C.F.R. § 122.42(a)(1)(i));

b. 200 µg/L for acrolein and acrylonitrile; 500 µg/L for 2,4-dinitrophenol and 2-methyl-4,6-dinitrophenol; and 1 milligram per liter (mg/L) for antimony (40 C.F.R. § 122.42(a)(1)(ii));

c. Five (5) times the maximum concentration value reported for that pollutant in the Report of Waste Discharge (40 C.F.R. § 122.42(a)(1)(iii)); or

d. The level established by the Regional Water Board in accordance with section 122.44(f). (40 C.F.R. § 122.42(a)(1)(iv).)

2. That any activity has occurred or will occur that would result in the discharge, on a non-routine or infrequent basis, of any toxic pollutant that is not limited in this Order, if that discharge will exceed the highest of the following "notification levels" (40 C.F.R. § 122.42(a)(2)):

a. 500 micrograms per liter (µg/L) (40 C.F.R. § 122.42(a)(2)(i));

b. 1 milligram per liter (mg/L) for antimony (40 C.F.R. § 122.42(a)(2)(ii));

c. Ten (10) times the maximum concentration value reported for that pollutant in the Report of Waste Discharge (40 C.F.R. § 122.42(a)(2)(iii)); or

d. The level established by the Regional Water Board in accordance with section 122.44(f). (40 C.F.R. § 122.42(a)(2)(iv).)

ATTACHMENT E – MONITORING AND REPORTING PROGRAM

Table of Contents

I. General Monitoring Provisions E-2
II. Monitoring Locations E-2
III. Influent Monitoring Requirements E-3
IV. Effluent Monitoring Requirements E-3
  A. Treated Process Wastewater Monitoring E-3
  B. Storm Water Monitoring E-4
V. Whole Effluent Toxicity Testing E-5
VI. Receiving water Monitoring Requirements E-8
VII. Legend for MRP Tables E-8
VIII. Reporting Requirments E-9
  A. General Monitoring and Reporting Requirements E-9
  B. Self Monitoring Reports (SMRs) E-9
  C. Discharge Monitoring Reports (DMRs) E-11
  D. Other Reports E-12

Tables

Table E-1. Monitoring Station Locations E-2
Table E-2. Treated Process Wastewater Monitoring E-3
Table E-3. Storm Water Monitoring E-4
Table E-4. Monitoring Periods and Reporting Schedule E-10

ATTACHMENT E – MONITORING AND REPORTING PROGRAM (MRP)

40 CFR 122.48 requires that all NPDES permits specify monitoring and reporting requirements. California Water Code (CWC) sections 13267 and 13383 also authorize the Regional Water Board to require technical and monitoring reports. This MRP establishes monitoring and reporting requirements that implement federal and California regulations.

I. GENERAL MONITORING PROVISIONS

A. The Discharger shall comply with this MRP as adopted by the Regional Water Board, and with all of the Regional Standard Provisions (Attachment G). The Executive Officer may amend the MRP and Regional Standard Provisions pursuant to 40 CFR 122.62, 122.63, and 124.5. If any discrepancies exist between the MRP and the Regional Standard Provisions, the MRP prevails.

B. All analyses shall be conducted using current USEPA methods, or methods that have been approved by the USEPA Regional Administrator pursuant to 40 CFR 136.4 and 40 CFR 136.5, or equivalent methods that are commercially and reasonably available and that provide quantification of sampling parameters and constituents sufficient to evaluate compliance with applicable effluent limits and to perform reasonable potential analyses. Equivalent methods must be more sensitive than those specified in 40 CFR 136, must be specified in the permit, and must be approved for use by the Executive Officer following consultation with the State Water Board's Quality Assurance Program.

C. Sampling and analysis of additional constituents is required pursuant to the Regional Standard Provisions (Attachment G).

D. Laboratories analyzing monitoring samples shall be certified by the Department of Public Health, in accordance with CWC section 13176, and must include quality assurance/quality control data with their reports.

II. MONITORING LOCATIONS

The Discharger shall monitor at the following locations to demonstrate compliance with the effluent limitations, discharge specifications, and other requirements in this Order.

Table E-1. Monitoring Station Locations

Type of Sampling Location	Monitoring Location Name	Monitoring Location Description
Treated Process Wastewater	EFF-001	At any point after full treatment and before contact with Suisun Bay
Disinfected Sanitary Wastewater	EFF-001-D1	At any point in the Tract 1 sanitary sewer where adequate disinfection is assured
Disinfected Sanitary Wastewater	EFF-001-D2	At any point in the Tract 2 sanitary sewer where adequate disinfection is assured
Storm Water	EFF-003	At any point where storm water representative of that discharged at Discharge Point 003, including all storm water flow tributary to that outfall, is present
Storm Water	EFF-004	At any point where storm water representative of that discharged at Discharge Point 004, including all storm water flow tributary to that outfall, is present

Type of Sampling Location	Monitoring Location Name	Monitoring Location Description
Storm Water	EFF-005-T2NW	At any point where storm water representative of that discharged at Discharge Point 005-T2NW, including all storm water flow tributary to that outfall, is present
Storm Water	EFF-005-T2S-A	At any point where storm water representative of that discharged at Discharge Point 005-T2S-A, including all storm water flow tributary to that outfall, is present
Storm Water	EFF-005-T2S-B	At any point where storm water representative of that discharged at Discharge Point 005-T2S-B, including all storm water flow tributary to that outfall, is present
Storm Water	EFF-005-T2S-C	At any point where storm water representative of that discharged at Discharge Point 005-T2S-C, including all storm water flow tributary to that outfall, is present
Storm Water	EFF-005-T2SW	At any point where storm water representative of that discharged at Discharge Point 005-T2SW, including all storm water flow tributary to that outfall, is present
Storm Water	EFF-005-T4NW	At any point where storm water representative of that discharged at Discharge Point 005-T4NW, including all storm water flow tributary to that outfall, is present
Storm Water	EFF-005-T4SW	At any point where storm water representative of that discharged at Discharge Point 005-T4SW, including all storm water flow tributary to that outfall, is present
Storm Water	EFF-005-AS	At any point where storm water representative of that discharged at Discharge Point 005-AS, including all storm water flow tributary to that outfall, is present
Storm Water	EFF-006	At any point where storm water representative of that discharged at Discharge Point 006, including all storm water flow tributary to that outfall, is present

III. INFLUENT MONITORING REQUIREMENTS

Not Applicable.

IV. EFFLUENT MONITORING REQUIREMENTS

A. Treated Process Wastewater Monitoring

The Discharger shall monitor treated effluent at EFF-001 as follows:

Table E-2. Treated Process Wastewater Monitoring

Parameter	Units	Sample Type	Minimum Sampling Frequency
Flow Rate [1]	MGD	Continuous	1/Day
Oil and Grease [2]	mg/L	Grab, C-24	1/Week
pH [3]	s.u.	Continuous	Continuous
Temperature	ºC	Continuous	Continuous
Chlorine residual	mg/L	Grab	1/Month
Total Coliform [4]	MPN/100 mL	Grab	1/Week
BOD_5	mg/L, lbs/day	C-24	1/Month
TSS	mg/L, lbs/day	C-24	1/Week

Parameter	Units	Sample Type	Minimum Sampling Frequency
COD	mg/L, lbs/day	C-24	1/Month
Sulfide	mg/L, lbs/day	Grab	1/Month
Ammonia N	mg/L, lbs/day	C-24	1/Month
Total Chromium	lbs/day	C-24	1/Month
Hexavalent Chromium	lbs/day	Grab	1/Month
Phenolics Compounds (4AAP)	lbs/day	C-24	1/Month
Copper	µg/L	C-24	1/Month
Cyanide	µg/L	Grab	1/Month
Dioxin-TEQ	µg/L	C-24	1/Quarter
Selenium	µg/L	C-24	1/Week
Lead	µg/L	C-24	1/Month
Acute Toxicity [5]	% survival	C-24	1/Week
Chronic Toxicity [6]	TUc	C-24	1/Quarter
Remaining Priority Pollutants[7]	µg/L	C-24/Grab	2/Year
Standard Observations	---	---	Daily

[1] Flows shall be monitored continuously and the following shall be reported in monthly SMRs:

a. Daily average flow rate (MGD),
b. Daily total flow volume (MG),
c. Monthly average flow rate (MGD),
d. Monthly total flow volume (MG), and
e. Average daily maximum and average daily minimum flow rates (MGD) in a month.

[2] Each oil and grease sample shall consist of a composite sample comprised of three grab samples taken at equal intervals during the sampling date, with each grab sample being collected in a glass container. The grab samples shall be mixed in proportion to the instantaneous flow rates occurring at the time of each grab sample, within the accuracy of plus or minus 5%. Each glass container used for sample collection or mixing shall be thoroughly rinsed with solvent as soon as possible after use, and the solvent rinsings shall be added to the sample for extraction or analysis.

[3] If pH is monitored continuously, the minimum and maximum pH values for each day shall be reported in monthly self-monitoring reports.

[4] The Discharger shall monitor for total coliform organisms at E-001-D1 and E-001-D2.

[5] Acute bioassay tests shall be performed in accordance with MRP section V.A.

[6] Critical Life Stage Toxicity Tests shall be performed and reported in accordance with the Chronic Toxicity Requirements specified in MRP section V.B.

[7] Sampling for all priority pollutants is addressed in the Regional Standard Provisions (Attachment G).

B. Storm Water Monitoring

The Discharger shall monitor storm water discharges at EFF-003 through -006 as summarized in the following table.

Table E-3. Storm Water Monitoring

Parameter	Units	Sample Type	Minimum Sampling Frequency	Outfalls
Flow	MGD	Calculation [1]	Not Applicable	All
TOC	mg/L	Grab [2]	On each occurrence[3]	All[4]
Oil and Grease	mg/L	Grab [2]	On each occurrence[3]	All[4]

Parameter	Units	Sample Type	Minimum Sampling Frequency	Outfalls
pH	s.u.	Grab [2]	On each occurrence[3]	All[4]
Specific Conductance	µmhos/cm	Grab [2]	On each occurrence[3]	All[4]
TSS	mg/L	Grab [2]	On each occurrence [3]	All[4]
Standard Observations	---	---	On each occurrence[3]	All
BOD_5	mg/L	Grab [2]	Daily during storm event	[5]
COD	mg/L	Grab [2]	Daily during storm event	[5]
Phenolic Compounds	mg/L	Grab [2]	Daily during storm event	[5]
Total Chromium	µg/L	Grab [2]	Daily during storm event	[5]
Hexavalent Chromium	µg/L	Grab [2]	Daily during storm event	[5]

[1] The monthly cumulative rainfall shall be measured, and the total volume of storm water discharged for each month shall be calculated based on the drainage area served by each discharge point. The monthly rainfall amount and the monthly discharge volume for each discharge point shall be reported on a monthly basis.

[2] At least one grab sample shall be collected within the first 30 minutes of significant flow during a storm event.

[3] For E-005 and E-006 discharges, samples for chemical analysis shall be collected, during daylight storms, at least twice during the wet season.

[4] If and when the supplemental effluent limitations in Table 12 of this Order become effective in accordance with section IV.B.2 of this Order, the monitoring frequency at the outfalls where the limitations are in effect shall be increased to daily during each storm event.

[5] If and when effluent limitations for this pollutant in Table 12 of this Order become effective in accordance with section IV.B.2 of this Order, monitoring shall begin at the outfalls where the limitations are in effect.

V. WHOLE EFFLUENT TOXICITY TESTING

The Discharger shall monitor acute and chronic toxicity at EFF-001 as described below.

A. Whole Effluent Acute Toxicity

1. Compliance with the acute toxicity effluent limitations of this Order shall be evaluated by measuring survival of test organisms exposed to 96-hour continuous flow-through bioassays.

2. Test species shall be rainbow trout unless the Executive Officer specifies otherwise in writing.

3. All bioassays shall be performed according to the most up-to-date protocols in 40 CFR 136, currently in *Methods for Measuring the Acute Toxicity of Effluents and Receiving Water to Freshwater and Marine Organisms*, 5th Edition.

4. Effluent used for fish bioassays must be dechlorinated prior to testing. Monitoring of the bioassay water shall include, on a daily basis, the following parameters: pH, dissolved oxygen, ammonia (if toxicity is observed), temperature, hardness, and alkalinity. These results shall be reported. If the fish survival rate in the effluent is less than 70 percent or if the control fish survival rate is less than 90 percent, the bioassay test shall be restarted as soon as practicable with new fish and shall continue back to back until compliance is demonstrated.

B. Whole Effluent Chronic Toxicity

1. Monitoring Requirements

   a. *Sampling*. The Discharger shall collect 24-hour composite samples of the effluent at EFF-001 for critical life stage toxicity testing as indicated below. For toxicity tests requiring renewals, 24-hour composite samples collected on consecutive days are required.

   b. *Test Species*. Chronic toxicity shall be monitored using critical life stage tests(s) and the most sensitive test species identified by screening phase testing. At the time of this permit adoption, the approved species is mysid shrimp (*Americamysis bahia*). The Executive Officer may change to another test species if data suggest that another test species is more sensitive to the discharge.

   c. *Methodology*. Sample collection, handling and preservation shall be in accordance with USEPA protocols. In addition, bioassays shall be conducted in compliance with the most recently promulgated test methods, as shown in Appendix E-1. These are *Short-Term Methods for Estimating the Chronic Toxicity of Effluents and Receiving Waters to Marine and Estuarine Organisms*, currently third edition (EPA-821-R-02-014), and *Short-term Methods for Estimating the Chronic Toxicity of Effluents and Receiving Waters to Freshwater Organisms*, currently fourth Edition (EPA-821-R-02-013), with exceptions granted the Discharger by the Executive Officer and the Environmental Laboratory Accreditation Program (ELAP).

   d. *Dilution Series.* The Discharger shall conduct tests at 50%, 25%, 10%, 5%, and 2.5%. The "%" represents percent effluent as discharged.

   e. *Accelerated Monitoring*. The Discharger shall accelerate monitoring to occur monthly when either of the following conditions is exceeded:

      (1) Three sample median value of 10 chronic toxicity units (TUc), or

      (2) Single sample maximum value of 20 TUc.

2. Reporting Requirements

   a. *Routine Reporting*. Toxicity test results for the current reporting period shall include, at a minimum, for each test:

      (1) Sample dates

      (2) Test initiation date

      (3) Test species

      (4) End point values for each dilution (e.g., number of young, growth rate, percent survival)

(5) NOEC values in percent effluent

(6) IC_{15}, IC_{25}, IC_{40}, and IC_{50} values (or EC_{15}, EC_{25} ... etc.) as percent effluent

(7) TUc values (100/NOEC, $100/IC_{25}$, or $100/EC_{25}$)

(8) Mean percent mortality (±s.d.) after 96 hours in 100% effluent (if applicable)

(9) NOEC and LOEC values for reference toxicant tests

(10) IC50 or EC50 values for reference toxicant tests

(11) Available water quality measurements for each test (pH, dissolved oxygen, temperature, conductivity, hardness, salinity, ammonia)

b. *Compliance Summary*. The results of the chronic toxicity testing shall be provided in the self-monitoring report and shall include a summary table of chronic toxicity data from at least three of the most recent samples. The information in the table shall include items listed above under 2.a, specifically item numbers (1), (3), (5), (6)[IC_{25} or EC_{25}], (7), and (8).

3. Toxicity Reduction Evaluation (TRE)

a. To be ready to respond to toxicity events, the Discharger shall prepare a generic TRE work plan within 90 days of the effective date of this Order. The Discharger shall review and update the work plan as necessary to remain current and applicable to the discharge and discharge facilities.

b. Within 30 days of exceeding either trigger for accelerated monitoring, the Discharger shall submit to the Regional Water Board a specific TRE work plan, which should be the generic work plan revised as appropriate for this toxicity event after consideration of available discharge data.

c. Within 30 days of the date of completion of the accelerated monitoring tests observed to exceed either trigger, the Discharger shall initiate a TRE in accordance with a TRE work plan that incorporates any and all comments from the Executive Officer.

d. The TRE shall be specific to the discharge and be prepared in accordance with current technical guidance and reference materials, including USEPA guidance materials. The TRE shall be conducted as a tiered evaluation process, as summarized below:

(1) Tier 1 consists of basic data collection (routine and accelerated monitoring).

(2) Tier 2 consists of evaluation of optimization of the treatment process, including operation practices and in-plant process chemicals.

(3) Tier 3 consists of a toxicity identification evaluation (TIE).

(4) Tier 4 consists of evaluation of options for additional effluent treatment processes.

(5) Tier 5 consists of evaluation of options for modifications of in-plant treatment processes.

(6) Tier 6 consists of implementation of selected toxicity control measures, and follow-up monitoring and confirmation of implementation success.

e. The TRE may be ended at any stage if monitoring finds there is no longer consistent toxicity (complying with requirements of section IV.A.6 of this Order).

f. The objective of the TIE shall be to identify the substance or combination of substances causing the observed toxicity. All reasonable efforts using currently available TIE methods shall be employed.

g. As toxic substances are identified or characterized, the Discharger shall continue the TRE by determining the sources and evaluating alternative strategies for reducing or eliminating the substances from the discharge. All reasonable steps shall be taken to reduce toxicity to levels consistent with chronic toxicity evaluation parameters.

h. Many recommended TRE elements parallel required or recommended efforts of source control, pollution prevention, and storm water control programs. TRE efforts should be coordinated with such efforts. To prevent duplication of efforts, evidence of complying with requirements or recommended efforts of such programs may be acceptable to comply with TRE requirements.

i. The Regional Water Board recognizes that chronic toxicity may be episodic and identification of causes of, and reduction of, sources of chronic toxicity may not be successful in all cases. Consideration of enforcement action by the Regional Water Board will be based in part on the Discharger's actions and efforts to identify and control or reduce sources of consistent toxicity.

VI. RECEIVING WATER MONITORING REQUIREMENTS

The Discharger shall continue to participate in the Regional Monitoring Program (RMP), which involves collection of data on pollutants and toxicity in water, sediment and biota of the Estuary. The Discharger's participation and support of the RMP is used in consideration of the level of receiving water monitoring required by this Order.

VII. LEGEND FOR MRP TABLES

Types of Samples

C-24 = composite sample, 24 hours (includes continuous sampling, such as for flows)

Frequency of Sampling

1/Week = once each week
1/Month = once each month
1/Quarter = once each calendar quarter (at about three month intervals)
2/Year = twice each calendar year (at about 6 months intervals, once during dry season, once during wet season)

Parameter and Unit Abbreviations

BOD_5	=	5-day biochemical oxygen demand
COD	=	chemical oxygen demand
TUc	=	chronic toxicity units
°C	=	degrees Celsius
DO	=	dissolved oxygen
µg/L	=	micrograms per liter
µmhos/cm	=	micromhos/centimeter
MG	=	million gallons
MGD	=	million gallons per day
mg/L	=	milligrams per liter
ml/L-hr	=	milliliters per liter, per hour
MPN/100 ml	=	most probable number per 100 milliliters
% survival	=	percent survival
PAHs	=	polycyclic aromatic hydrocarbons
lbs/day	=	pounds per day
TSS	=	total suspended solids
s.u.	=	standard pH units

VIII. REPORTING REQUIRMENTS

A. General Monitoring and Reporting Requirements

The Discharger shall comply with all Federal Standard Provisions (Attachment D) and Regional Standard Provisions (Attachment G) related to monitoring, reporting, and recordkeeping.

B. Self Monitoring Reports (SMRs)

1. At any time during the term of this Order, the State or Regional Water Board may notify the Discharger to electronically submit SMRs using the State Water Board's California Integrated Water Quality System (CIWQS) Program Web site (http://www.waterboards.ca.gov/ciwqs/index.html). Until such notification is given, the Discharger shall submit hard copy SMRs. The CIWQS Web site will provide additional directions for SMR submittal in the event there will be service interruption for electronic submittal.

2. The Discharger shall report in each SMR the results for all monitoring specified in this MRP under sections III through X. The Discharger shall submit monthly and annual SMRs including the results of all required monitoring using USEPA-approved test methods or other test methods specified in this Order. If the Discharger monitors any pollutant more frequently than required by this Order, the results of this monitoring shall be included in the calculations and reporting of the data submitted in the SMR. Monthly SMRs shall be due on the 30th day following the end of each calendar month, covering samples collected during that calendar month; Annual Reports shall be due on February 1 following each calendar year.

3. Monitoring periods and reporting for all required monitoring shall be completed according to the following schedule:

Table E-4. Monitoring Periods and Reporting Schedule

Sampling Frequency	Monitoring Period Begins On…	Monitoring Period
Continuous	Day after permit effective date	All
Hourly	Day after permit effective date	Hourly
Daily	Day after permit effective date	Midnight through 11:59 PM or any 24-hour period that reasonably represents a calendar day for purposes of sampling.
Weekly	Sunday following permit effective date or on permit effective date if on a Sunday	Sunday through Saturday
Monthly	First day of calendar month following permit effective date or on permit effective date if that date is first day of the month	1st day of calendar month through last day of calendar month
Quarterly	Closest of January 1, April 1, July 1, or October 1 following (or on) permit effective date	January 1 through March 31 April 1 through June 30 July 1 through September 30 October 1 through December 31
Semiannually	Closest of January 1 or July 1 following (or on) permit effective date	January 1 through June 30 July 1 through December 31
Annually	January 1 following (or on) permit effective date	January 1 through December 31
Per Discharge Event	Anytime during the discharge event or as soon as possible after aware of the event	At a time when sampling can characterize the discharge event

4. The Discharger shall report with each sample result the applicable Reporting Level (RL) and the current Method Detection Limit (MDL), as determined by the procedure in 40 CFR 136.

   The Discharger shall report the results of analytical determinations for the presence of chemical constituents in a sample using the following reporting protocols:

   a. Sample results greater than or equal to the RL shall be reported as measured by the laboratory (i.e., the measured chemical concentration in the sample).

   b. Sample results less than the RL, but greater than or equal to the laboratory's MDL, shall be reported as "Detected, but Not Quantified" or DNQ. The estimated chemical concentration of the sample shall also be reported.

      For the purposes of data collection, the laboratory shall write the estimated chemical concentration next to DNQ as well as the words "Estimated Concentration" (may be shortened to "Est. Conc."). The laboratory may, if such information is available, include numerical estimates of the data quality for the reported result. Numerical estimates of data quality may be percent accuracy ($\pm$ a percentage of the reported value), numerical ranges (low to high), or any other means considered appropriate by the laboratory.

   c. Sample results less than the laboratory's MDL shall be reported as "Not Detected" or ND.

   d. Dischargers are to instruct laboratories to establish calibration standards so that the ML (or its equivalent if there is differential treatment of samples relative to calibration

standards) is the lowest calibration standard. At no time is the Discharger to use analytical data derived from *extrapolation* beyond the lowest point of the calibration curve.

5. The Discharger shall submit SMRs in accordance with the following requirements:

   a. The Discharger shall arrange all reported data in a tabular format. The data shall be summarized to clearly illustrate whether the facility is operating in compliance with effluent limitations. The Discharger is not required to duplicate the submittal of data entered in a tabular format within CIWQS. When electronic submittal of data is required and CIWQS does not provide for entry into a tabular format within the system, the Discharger shall electronically submit the data in a tabular format as an attachment.

   b. The Discharger shall attach a cover letter to the SMR. The information in the cover letter shall clearly identify violations of the Waste Discharge Requirements (WDRs), discuss corrective actions taken or planned, and specify the proposed time schedule for corrective actions. Identified violations shall include a description of the requirement that was violated and a description of the violation.

   c. SMRs shall be submitted to the Regional Water Board, signed and certified as required by the Federal Standard Provisions (Attachment D), to the address listed below:

      California Regional Water Quality Control Board
      San Francisco Bay Region
      1515 Clay Street, Suite 1400
      Oakland, CA 94612
      ATTN: NPDES Wastewater Division

C. Discharge Monitoring Reports (DMRs)

1. As described in section XII.B.1 above, at any time during the term of this Order, the State or Regional Water Board may notify the Discharger to electronically submit SMRs that will satisfy federal requirements for submittal of DMRs. Until such notification is given, the Discharger shall submit DMRs in accordance with the requirements described below.

2. DMRs shall be signed and certified as required by the Federal Standard Provisions (Attachment D). The Discharger shall submit the original DMR and one copy of the DMR to one of the addresses listed below:

Standard Mail	**FedEx/UPS/Other Private Carriers**
State Water Resources Control Board Division of Water Quality c/o DMR Processing Center PO Box 100 Sacramento, CA 95812-1000	State Water Resources Control Board Division of Water Quality c/o DMR Processing Center 1001 I Street, 15th Floor Sacramento, CA 95814

3. All discharge monitoring results shall be reported on the official USEPA pre-printed DMR forms (EPA Form 3320-1). Forms that are self-generated will not be accepted unless they follow the exact same format as EPA Form 3320-1.

D. Other Reports

Annually, with the first monthly SMR following the respective due dates, the Discharger shall report the results of any special studies, monitoring, and reporting required by section VI.C.2 (Special Studies, Technical Reports, and Additional Monitoring Requirements) of this Order. The Discharger shall include a report of progress toward meeting compliance schedules set forth in section VI.C.2 of this Order.

APPENDIX E-1
CHRONIC TOXICITY
DEFINITION OF TERMS AND SCREENING PHASE REQUIREMENTS

I. Definition of Terms

A. No observed effect level (NOEL) for compliance determination is equal to IC_{25} or EC_{25}. If the IC_{25} or EC_{25} cannot be statistically determined, the NOEL shall be equal to the NOEC derived using hypothesis testing.

B. Effective concentration (EC) is a point estimate of the toxicant concentration that would cause an adverse effect on a quantal, "all or nothing," response (such as death, immobilization, or serious incapacitation) in a given percent of the test organisms. If the effect is death or immobility, the term lethal concentration (LC) may be used. EC values may be calculated using point estimation techniques such as probit, logit, and Spearman-Karber. EC_{25} is the concentration of toxicant (in percent effluent) that causes a response in 25 percent of the test organisms.

C. Inhibition concentration (IC) is a point estimate of the toxicant concentration that would cause a given percent reduction in a nonlethal, nonquantal biological measurement, such as growth. For example, an IC_{25} is the estimated concentration of toxicant that would cause a 25 percent reduction in average young per female or growth. IC values may be calculated using a linear interpolation method such as USEPA's Bootstrap Procedure.

D. No observed effect concentration (NOEC) is the highest tested concentration of an effluent or a toxicant at which no adverse effects are observed on the aquatic test organisms at a specific time of observation. It is determined using hypothesis testing.

II. Chronic Toxicity Screening Phase Requirements

A. The Discharger shall perform screening phase monitoring:

1. Subsequent to any significant change in the nature of the effluent discharged through changes in sources or treatment, except those changes resulting from reductions in pollutant concentrations attributable to source control efforts, or

2. Prior to permit reissuance. Screening phase monitoring data shall be included in the NPDES permit application for reissuance. The information shall be as recent as possible, but may be based on screening phase monitoring conducted within 5 years before the permit expiration date.

B. Design of the screening phase shall, at a minimum, consist of the following elements:

1. Use of test species specified in **Appendix E-2**, attached, and use of the protocols referenced in those tables, or as approved by the Executive Officer.

2. Two stages:

a. Stage 1 shall consist of a minimum of one battery of tests conducted concurrently. Selection of the type of test species and minimum number of tests shall be based on **Appendix E-2** (attached).

b. Stage 2 shall consist of a minimum of two test batteries conducted at a monthly frequency using the three most sensitive species based on the Stage 1 test results and as approved by the Executive Officer.

3. Appropriate controls.

4. Concurrent reference toxicant tests.

5. Dilution series 100%, 50%, 25%, 10%, 5%, 0 %, where "%" is percent effluent as discharged, or as otherwise approved the Executive Officer.

C. The Discharger shall submit a screening phase proposal acceptable to the Executive Officer. The proposal shall address each of the elements listed above. If within 30 days, the Executive Officer does not comment, the Discharge shall commence with screening phase monitoring.

APPENDIX E-2
SUMMARY OF TOXICITY TEST SPECIES REQUIREMENTS

Critical Life Stage Toxicity Tests for Estuarine Waters

Species	(Scientific Name)	Effect	Test Duration	Reference
Alga	*(Skeletonema costatum)* *(Thalassiosira pseudonana)*	Growth rate	4 days	1
Red alga	*(Champia parvula)*	Number of cystocarps	7–9 days	3
Giant kelp	*(Macrocystis pyrifera)*	Percent germination; germ tube length	48 hours	2
Abalone	*(Haliotis rufescens)*	Abnormal shell development	48 hours	2
Oyster Mussel	*(Crassostrea gigas)* *(Mytilus edulis)*	Abnormal shell development; percent survival	48 hours	2
Echinoderms - Urchins Sand dollar	*(Strongylocentrotus purpuratus, S. franciscanus)* *(Dendraster excentricus)*	Percent fertilization	1 hour	2
Shrimp	*(Mysidopsis bahia)*	Percent survival; growth	7 days	3
Shrimp	*(Holmesimysis costata)*	Percent survival; growth	7 days	2
Topsmelt	*(Atherinops affinis)*	Percent survival; growth	7 days	2
Silversides	*(Menidia beryllina)*	Larval growth rate; percent survival	7 days	3

Toxicity Test References:

1. American Society for Testing Materials (ASTM). 1990. Standard Guide for Conducting Static 96-Hour Toxicity Tests with Microalgae. Procedure E 1218-90. ASTM, Philadelphia, PA.
2. Short-term Methods for Estimating the Chronic Toxicity of Effluent and Receiving Waters to West Coast Marine and Estuarine Organisms. EPA/600/R-95/136. August 1995.
3. Short-term Methods for Estimating the Chronic Toxicity of Effluent and Receiving Waters to Marine and Estuarine Organisms. EPA/600/4-90/003. July 1994.

Critical Life Stage Toxicity Tests for Fresh Waters

Species	(Scientific Name)	Effect	Test Duration	Reference
Fathead minnow	*(Pimephales promelas)*	Survival; growth rate	7 days	4
Water flea	*(Ceriodaphnia dubia)*	Survival; number of young	7 days	4
Alga	*(Selenastrum capricornutum)*	Cell division rate	4 days	4

Toxicity Test Reference:

4. Short-term Methods for Estimating the Chronic Toxicity of Effluents and Receiving Waters to Freshwater Organisms, third edition. EPA/600/4-91/002. July 1994.

Toxicity Test Requirements for Stage One Screening Phase

Requirements	Receiving Water Characteristics		
	Discharges to Coast	Discharges to San Francisco Bay[2]	
	Ocean	Marine/Estuarine	Freshwater
Taxonomic diversity	1 plant 1 invertebrate 1 fish	1 plant 1 invertebrate 1 fish	1 plant 1 invertebrate 1 fish
Number of tests of each salinity type: Freshwater[1] Marine/Estuarine	0 4	1 or 2 3 or 4	3 0
Total number of tests	4	5	3

[1] The freshwater species may be substituted with marine species if:

(a) The salinity of the effluent is above 1 part per thousand (ppt) greater than 95 percent of the time, or

(b) The ionic strength (TDS or conductivity) of the effluent at the test concentration used to determine compliance is documented to be toxic to the test species.

[2] (a) Marine/Estuarine refers to receiving water salinities greater than 1 ppt at least 95 percent of the time during a normal water year.

(b) Fresh refers to receiving water with salinities less than 1 ppt at least 95 percent of the time during a normal water year.

ATTACHMENT F – FACT SHEET

Table of Contents

I. Permit Information F-3
II. Facility Description F-4
A. Description of Wastewater Treatment or Controls F-4
B. Discharge Points and Receiving Waters F-5
C. Summary of Existing Requirements and Self-Monitoring Report (SMR) Data F-7
D. Compliance Summary F-9
E. Planned Changes F-9
III. Applicable Plans, Policies, and Regulations F-9
A. Legal Authorities F-9
B. California Environmental Quality Act (CEQA) F-9
C. State and Federal Regulations, Policies, and Plans F-9
D. Impaired Water Bodies on CWA 303(d) List F-11
IV. Rationale For Effluent Limitations and Discharge Specifications F-11
A. Discharge Prohibitions F-12
B. Technology-Based Effluent Limitations F-12
1. Scope and Authority F-12
2. Applicable Technology-Based Effluent Limitations F-12
C. Water Quality-Based Effluent Limitations (WQBELs) for Toxic Substances F-13
1. Scope and Authority F-13
2. Applicable Beneficial Uses and Water Quality Objectives F-13
3. Determining the Need for WQBELs F-16
4. WQBEL Calculations F-21
5. Total Coliform Organisms Limitation F-30
6. Selenium Mass Emission Limitation F-30
7. Whole Effluent Acute Toxicity F-31
8. Whole Effluent Chronic Toxicity F-32
9. Anti-backsliding and Antidegradation F-32
D. Land Discharge Specifications F-34
E. Reclamation Specifications F-34
V. Rationale for Receiving Water Limitations F-34
VI. Rationale for Monitoring and Reporting Requirements F-34
A. Influent Monitoring F-34
B. Effluent Monitoring F-35
C. Whole Effluent Toxicity Testing Requirements F-35
D. Receiving Water Monitoring F-35
VII. Rationale for Provisions F-36
A. Standard Provisions (Provision VI.A) F-36
B. Monitoring and Reporting Requirements (Provision VI.B) F-36
C. Special Provisions (Provision VI.C) F-36
1. Reopener Provisions F-36
2. Special Studies and Additional Monitoring F-36
3. Best Management Practices and Pollution Minimization Program F-37
4. Other Special Provisions F-37
VIII. Public Participation F-37

A. Notification of Interested Parties F-38
B. Written Comments F-38
C. Public Hearing F-38
D. Waste Discharge Requirements Petitions F-38
E. Information and Copying F-39
F. Register of Interested Persons F-39
G. Additional Information F-39

List of Tables

Table F-1. Facility Information F-3
Table F-2. Outfall Location F-6
Table F-3a. Summary of Previous Effluent Limitations and Monitoring Data, Discharge Point 001 ..... F-7
Table F-3b. Summary of Previous Effluent Limitations and Monitoring Data for Toxic Pollutants, Discharge Point 001 ..... F-7
Table F-4. Previous Storm Water Effluent Limitations F-8
Table F-5. Storm Water Quality F-8
Table F-6. Numeric Effluent Exceedances F-9
Table F-7. Beneficial Uses F-14
Table F-8. Translators for Copper and Nickel for Deepwater Discharges North of Dumbarton Bridge F-16
Table F-9. Summary of RPA Results F-18
Table F-10. Effluent Limit Calculations F-28

ATTACHMENT F – FACT SHEET

As described in section II of this Order, this Fact Sheet includes the legal requirements and technical rationale that serve as the basis for the requirements of this Order.

This Order has been prepared under a standardized format to accommodate a broad range of discharge requirements for dischargers in California. Only those sections or subsections of this Order that are specifically identified as "not applicable" have been determined not to apply to this Discharger. All other sections or subsections of this Order apply fully to this Discharger.

I. PERMIT INFORMATION

The following table summarizes administrative information related to the Tesoro Golden Eagle Refinery.

Table F-1. Facility Information

WDID	2 071048001
Discharger	Tesoro Refining and Marketing Company
Name of Facility	Tesoro Golden Eagle Refinery
Facility Address	150 Solano Way
	Martinez, CA 94553
	Contra Costa County
Facility Contact, Title, Phone	Peter Carroll, Environmental Engineer, (925) 335-3497
Authorized Person to Sign and Submit Reports	William Bodnar, Vice President and Golden Eagle Refinery Manger
Mailing Address	150 Solano Way, Martinez, CA 94553
Billing Address	Same as Mailing Address
Type of Facility	Petroleum Refinery
Major or Minor Facility	Major
Threat to Water Quality	1
Complexity	A
Pretreatment Program	NA
Reclamation Requirements	N
Mercury Discharge Requirements	Yes, under Order No. R2-2007-0077
Facility Hydraulic Capacity	18.52 million gallons per day (MGD)
Average Facility Flow (2004-2009)	4.1 MGD
Watershed	Suisun Basin
Receiving Water	Suisun Bay, Carquinez Strait
Receiving Water Type	Estuarine

A. The Tesoro Refining and Marketing Company (hereinafter Discharger) is the owner and operator of the Tesoro Golden Eagle Refinery.

For the purposes of this Order, references to the "discharger" or "permittee" in applicable federal and State laws, regulations, plans, or policy are held to be equivalent to references to the Discharger herein.

B. The Discharger discharges treated wastewater and storm water runoff into Suisun Bay and Carquinez Strait, waters of the State and United States, and is currently regulated by National Pollutant Discharge Elimination System (NPDES) Permit No. CA0004961 through Order No. R2-2005-0041 (hereinafter previous permit), which was adopted on September 21, 2005. Order No. R2-2005-0041 was amended by Order No. R2-2010-0056 that implemented site specific objectives for cyanide, and by Order No. R2-2010-0057 that amended requirements for selenium. The Discharger's discharge is also currently regulated by Order No. R2-2007-0077 (NPDES Permit CA0038849) that superseded all requirements on mercury from wastewater discharges in the region. The mercury permit is unaffected by this Order. The Discharger filed a Report of Waste Discharge and submitted an application for reissuance of its Waste Discharge Requirements (WDRs) and NPDES permit on March 1, 2010.

II. FACILITY DESCRIPTION

A. Description of Wastewater Treatment or Controls

The Discharger owns and operates a petroleum refinery that processes an average crude oil volume of approximately 160,000 barrels per day (bbls/d). The Discharger receives crude oil by tanker or pipelines for the production of unleaded gasoline and diesel fuels. According to 40 CFR Part 419.20, the U.S. Environmental Protection Agency (USEPA) has classified this facility as a cracking refinery. The average discharge flow rate as of 2009 was 4.1 MGD; the hydraulic capacity of the treatment plant is approximately 18.5 MGD.

The refinery's wastewater treatment plant treats wastewater from sour water strippers, the ammonia recovery unit, acid plant effluent, cooling tower blowdown, boiler blowdown, cooling tower and boiler blowdown from the Foster Wheeler Cogeneration Plant, neutralized demineralizer regeneration water (hereinafter the Reject Water) from the water treatment system, the fire water system, groundwater from remediation activities; non-hazardous wastewater generated from offsite Discharger-owned facilities, the Monsanto Company Catalyst Plant, and cooling tower and boiler blowdown from Air Liquide Carbon Dioxide Plant. Additionally, the wastewater treatment plant also treats sanitary wastewater and stormwater from about 710 acres of process areas.

The Discharger routes process wastewater to a central pump station (i.e., No. 1 pump station). From this pump station, process wastewater flows to an API oil water and solids separator that consists of a head channel that feeds four concrete channels. The API Separator uses a chain driven system to remove oil and solids. The Discharger pumps this material to Tanks 699 and 700 for additional oil and water separation and recovery. After the API separator, wastewater flows by gravity to four Dissolved Nitrogen Flotation (DNF) units where additional oil and solids are removed.

From the DNF units, wastewater is routed through an air stripper where a blower forces air through a grid of perforated tubes. The vapors from the air stripper, DNF units, and API Separator are incinerated in a thermal oxidizer. The Discharger pumps wastewater from the Air Stripper to Surge Pond No. 1 for biotreatment. Surge Pond No. 1 is a 14-acre rectangular basin that is baffled into six sections where aeration and nutrients are provided. From Surge Pond No. 1, wastewater flows by gravity to Surge Pond No. 2. Surge Pond No. 2 is an 8-acre rectangular basin that is also aerated to ensure aerobic conditions. The Discharger may pump up to 900 gallons per minute of wastewater from Surge Pond No. 2 to the refinery for reuse as industrial water. The remaining wastewater from Surge Pond No. 2 is pumped to the

Bio-Oxidation Pond (Ox Pond). The Ox Pond is about 108 acres with an estimated capacity of 216 million gallons, but typically operates with a volume of around 150 million gallons. The Ox Pond is aerated at the inlet section of the pond to ensure oxygen levels in wastewater are adequate. It passively treats wastewater by providing a retention time of about 30 days.

From the Ox Pond, the Discharger routes wastewater to two clarifiers that operate in parallel. In the clarifiers, the Discharger adds coagulants and flocculants to enhance settling of wastewater solids. Clarifier solids are centrifuged, and disposed of offsite. The supernatant from the centrifuge is routed to Surge Pond No. 1. From the clarifiers, wastewater flows through a toothed weir to two filters (Round and Zimpro) that operate in parallel. The Round filter is multimedia (sand and anthracite) and consists of six chambers, while the Zimpro filter is a six-celled trickling sand filter. Both of these filters contain automatic backwash functions that allow them to maintain continuous operation. Backwash water from the filters is routed to Surge Pond No. 1 for treatment, and treated wastewater is routed to twelve Granular Activated Carbon (GAC) columns that operate in pairs (i.e., lead and lag). The Discharger uses GAC columns, as needed, to ensure treated wastewater is not toxic to aquatic life. Backwash water from the GAC columns is also discharged to Surge Pond No. 1 for further treatment.

After the GAC columns, the Discharger normally routes wastewater to a 26-acre Coke Pond to provide additional polishing of treated effluent. From the Coke Pond, the Discharger routes treated wastewater to the Clean Canal. Alternatively, the Discharger may route GAC column effluent directly to the Clean Canal.

The Clean Canal also receives storm water runoff, and neutralized demineralizer reject water from the Discharger's water treatment plant. The Clean Canal conveys treated wastewater and the other streams to a sump containing three pumps that discharge to Suisun Bay through a 27-inch diameter outfall. The outfall, referred to as E-001, terminates with a multi-port diffuser located under the Avon Wharf 45 feet below mean lower low water.

The refinery also has several storm water discharge points (Discharge Points 003 – 006), as described in Table F-2.

Most of the storm water at the refinery is routed to the refinery's wastewater treatment plant for treatment and discharge via Discharge Point 001.

B. Discharge Points and Receiving Waters

The locations of the Tesoro Golden Eagle Refinery Discharge Points 001 – 006, and the corresponding receiving waters, are shown in Table F-2 below.

Table F-2. Outfall Location

Discharge Point	Effluent Description	Discharge Point Latitude	Discharge Point Longitude	Receiving Water
001	Treated refinery process wastewater and storm water	38º, 02', 54" N	122º, 05', 22" W	Suisun Bay
003	Storm water from about 76 acres in the southwestern portions of the Tract 4 tank farm.	38º, 00', 44" N	122º, 03', 55" W	Walnut Creek
004	Storm water from about 198 acres including the southeast portion of the Tract 4 tank farm and all of the Tract 6 tank farm, and offsite facilities.	38º, 01', 21" N	122º, 03', 30" W	Hastings Slough
005-T2NW	Storm water from small areas near a stairway leading down to a non-operating saltwater pump station on the creek side of the slope.	38º 01' 48.73"N	122º 04' 31.29"W	Pacheco Slough
005-T2S-A	Storm water from small areas near the channel drain along the north side of a fence at a used equipment reclamation area before Gate 15 south of the Foster Wheeler area.	38º 01' 8.92"N	122º 04' 01.05"W	Pacheco Slough
005-T2S-B	Storm water from small areas near the fence line immediately north of the railroad tracks. This area is at the extreme south end of Tract 2.	38º 01' 09.52"N	122º 04' 02.96"W	Pacheco Slough
005-T2S-C	Storm water from small areas across the road west of the Foster-Wheeler yard (three tall gray tanks) where runoff form the asphalt perimeter drainage channels run under the road towards the creek.	38º 01' 12.75"N	122º 04' 05.76"W	Pacheco Slough
005-T2SW	Storm water from small areas near the "D" Street firehouse, against the fence. This area includes paved areas around the auto shop, and the western side of the Purchasing and Storehouse.	38º 01' 20.39"N	122º 04' 09.53"W	Pacheco Slough
005-T4NW	Storm water from small areas at the easternmost culvert that conveys runoff from this area under the road to the west.	38º 01' 04.58"N	122º 04' 03.06"W	Pacheco Slough
005-T4SW	Storm water from small areas near the outlet of the pipe that drains the impoundment. The pipe has a locked valve on it and is required to be sampled when there is a discharge from the impoundment.	38º 00' 15.25"N	122º 03' 29.78"W	Pacheco Slough
005-AS	Storm water from small areas near the culvert in the northwestern part of the area.	38º 01' 32.15"N	122º 07' 18.85"W	Unnamed slough to Carquinez Strait
006	Waste Management Unit (WMU) 5 Cap Runoff	38º 01' 38.47"N	122º 03' 24.05"W	Hastings Slough

C. Summary of Existing Requirements and Self-Monitoring Report (SMR) Data

1. Effluent limitations in the previous permit and representative monitoring data for Discharge Point 001 are summarized below.

Table F-3a. Summary of Previous Effluent Limitations and Monitoring Data, Discharge Point 001

Parameter	(units)	Effluent Limitations		Monitoring Data (From 1/05 To 12/09)	
		Monthly Average	Daily Maximum	Highest Monthly Average	Highest Daily Discharge
BOD_5	lb/day	2300	4100	1370	1370
COD	lb/day	16000	31000	11600	23900
TSS	lb/day	1800	2900	830	830
Oil and Grease	lb/day	670	1300	160	160
Phenolic Compounds	lb/day	12	31	0.65	0.65
Ammonia as N	lb/day	1300	2800	2435	2765
Sulfide	lb/day	12	27	<7.46	<14.08
Settleable Solids	mL/L/hr	0.1	0.2	0.1	0.1
Total Chromium	lb/day	14	39	0.42	1.04
Hexavalent Chromium	lb/day	1.1	2.5	<0.64	<1.41

Notes :
BOD_5 = 5-day Biochemical Oxygen Demand
COD = Chemical Oxygen Demand
mL/L/hr = milliliters per liter per hour
lb/day = pounds per day
TSS = Total Suspended Solids

Table F-3b. Summary of Previous Effluent Limitations and Monitoring Data for Toxic Pollutants, Discharge Point 001

Parameter	Units	Final Limits		Interim Limits		Monitoring Data (From 01/05 To 12/09)
		Daily Maximum	Monthly Average	Daily Maximum	Monthly Average	Highest Daily Concentration
Copper	µg/L	24	13	---	---	8.8
Mercury	µg/L	0.044	0.019	---	---	0.036
Nickel	µg/L	77	42	---	---	22
Selenium	µg/L	---	---	50	---	33
Thallium	µg/L	120	61	---	---	0.06
Cyanide	µg/L	---	---	25	---	25
Lead	µg/L	7.8	3.7	---	---	6.3
PCBs Sum	µg/L	---	---	0.5	---	ND (0.1) [(1)]
Dioxin-TEQ	µg/L	---	---	---	6.5×10^{-7} [(2)]	1.64×10^{-8}
Ammonia (N)	mg/L	---	---	---	---	22.1

[(1)] Analyte not detected in effluent. Number in parenthesis is the MDL as reported by the analytical laboratory.

Notes:
µg/L = micrograms per liter
PCB = Polychlorinated biphenyl
TEQ = Toxic Equivalents relative to 2,3,7,8-tetrachlorodibenzo-p-dioxin

(2) Order No. R2-2005-0041 required the Discharger to evaluate compliance with the interim dioxin limit by summing the concentrations of 1,2,3,4,6,7,8-hepta CDD, octa-CDD, 1,2,3,4,6,7,8-hepta CDF, 1,2,3,4,7,8,9-hepta CDF, and octa-CDF, and their respective TEFs.

2. The previous permit (section B.10) established the following effluent limitations, based on the requirements of *Effluent Limitations Guidelines for the Petroleum Refining Point Source Category*, for discharges of storm water through Discharge Points 003 – 005.

Table F-4. Previous Storm Water Effluent Limitations

Pollutant	Limitation
pH	within 6.5 to 8.5
Oil & Grease	daily maximum of 15 mg/L
TOC	daily maximum of 110 mg/L

Notes:
mg/L = milligrams per liter

In its Report of Waste Discharge, the Discharger provided the following characterization of its storm water discharges through Discharge Points 003 – 005.

Table F-5. Storm Water Quality

Discharge Point	Oil & Grease (mg/L)		TOC (mg/L)		TSS (mg/L)	
	Average	Daily Maximum	Average	Daily Maximum	Average	Daily Maximum
003	< 5	< 5	14.5	15	61	100
004	< 5	< 5	11	19	30	120
005-T2NW	< 5	< 5	8.4	20	70	230
005-T2S-A	< 5	<5	9.9	14	110	190
005-T2S-B	< 5	<5	11.0	18	540	1200
005-T2S-C	< 5	7.4	4.6	6.4	170	300
005-T2SW	< 5	<5	7.8	25	30	71
005-T4NW	< 5	< 5	14.7	22	240	420
005-T4SW	< 5	< 5	18.2	40	460	990
005-AS	No discharge					

Notes
TOC = Total Organic Carbon
TSS = Total Suspended Solids

As shown in Table 5, the Discharger met its numeric limits for storm water. The Discharger also complied with its stormwater pH limitation. At all of the Discharger's stormwater outfalls, pH values ranged from 6.6 to 8.4.

Although the previous permit had no TSS effluent limit for storm water, the TSS levels in storm water have often exceeded the benchmark value of 100 mg/L contained in USEPA's *NPDES Stormwater Multi-Sector General Permit for Industrial Activities* (Federal Register Volume 65, Number 210, October 30, 2000). The average storm water TSS level exceeded the benchmark value at more than half of the storm water outfalls. To address elevated TSS levels, this Order requires that the Discharger propose measures (e.g., riprap, soil removal, or installation of hay bales) and an implementation schedule to minimize solids in storm water runoff.

D. Compliance Summary

Exceedances of numeric effluent limits that occurred during the previous permit term (from December 2005 through December 2009) are summarized in the following table.

Table F-6. Numeric Effluent Exceedances

Date of Violation	Discharge Point	Exceeded Parameter	Units	Effluent Limitation	Reported Concentration
January 2006	001	Ammonia	lbs/month	1,300	2,435

To address this violation, the State Water Board took an enforcement action through Order SWB-2008-2-0031.

E. Planned Changes

The Discharger plans to begin capping a waste management unit (WMU), designated as WMU 5, in Tract 1 Drainage Area E in May 2010. WMU-5 will be closed to California Code of Regulations Title 27 standards (i.e., foundation layer no less than two feet thick, a low conductivity layer (< $1.0 * 10^{-6}$ cm/s), and an erosion resistant top layer). Once the Discharger completes construction (estimated to take about six months), storm water runoff from this area of about 8.5 acres will discharge to Hastings Slough. To ensure that storm water runoff does not adversely affect water quality, this Order establishes a new storm water monitoring point (EFF-006).

III. APPLICABLE PLANS, POLICIES, AND REGULATIONS

The requirements in this Order are based on the requirements and authorities described in this section.

A. Legal Authorities

This Order is issued pursuant to federal Clean Water Act (CWA) section 402 and implements regulations adopted by USEPA, and pursuant to California Water Code (CWC) Chapter 5.5, Division 7 (commencing with section 13370). It shall serve as an NPDES permit for point source discharges from this facility to surface waters. This Order also serves as WDRs pursuant to CWC Article 4, Chapter 4, Division 7 (commencing with section 13260).

B. California Environmental Quality Act (CEQA)

Under CWC section 13389, this action to adopt an NPDES permit is exempt from the provisions of CEQA.

C. State and Federal Regulations, Policies, and Plans

1. **Water Quality Control Plans.** *The Water Quality Control Plan for the San Francisco Bay Basin* (Basin Plan) is the Regional Water Board's master water quality control planning document. It designates beneficial uses and water quality objectives for waters of the State, including surface waters and groundwater. It also includes programs of implementation to achieve the water quality objectives. The Basin Plan was duly adopted by the Regional Water Board and approved by the State Water Resources Control Board, USEPA, and the

Office of Administrative Law (OAL), as required. Requirements of this Order implement the Basin Plan.

2. **Thermal Plan.** The State Water Board adopted a *Water Quality Control Plan for Control of Temperature in the Coastal and Interstate Water and Enclosed Bays and Estuaries of California* (Thermal Plan) on May 18, 1972, and amended this plan on September 18, 1975. This plan contains water quality objectives (WQOs) for coastal and interstate surface waters as well as enclosed bays and estuaries. The Tesoro Golden Eagle Refinery discharges to Suisun Bay and Carquinez Strait, both of which are defined as enclosed bays by the Thermal Plan. Requirements of this Order implement the Thermal Plan.

3. **National Toxics Rule (NTR) and California Toxics Rule (CTR).** USEPA adopted the NTR on December 22, 1992, which was amended on May 4, 1995, and November 9, 1999. About forty criteria in the NTR applied in California. On May 18, 2000, USEPA adopted the CTR. The CTR promulgated new toxics criteria for California and, in addition, incorporated the previously adopted NTR criteria that applied in the State. The CTR was amended on February 13, 2001. These rules contain water quality criteria for priority toxic pollutants that apply to Suisun Bay and Carquinez Strait.

4. **State Implementation Policy.** On March 2, 2000, the State Water Board adopted the *Policy for Implementation of Toxics Standards for Inland Surface Waters, Enclosed Bays, and Estuaries of California* (State Implementation Policy or SIP*).* The SIP became effective on April 28, 2000, with respect to the priority pollutant criteria USEPA promulgated for California through the NTR and to the priority pollutant objectives the Regional Water Board established in the Basin Plan. The SIP became effective on May 18, 2000, with respect to the priority pollutant criteria USEPA promulgated through the CTR. On February 24, 2005, the State Water Board adopted amendments to the SIP that became effective on July 13, 2005. The SIP establishes implementation provisions for priority pollutant objectives and provisions for chronic toxicity control. Requirements of this Order implement the SIP.

5. **Alaska Rule.** On March 30, 2000, USEPA revised its regulation that specifies when new and revised State and tribal water quality standards (WQS) become effective for CWA purposes [65 Fed. Reg. 24641 (April 27, 2000) (codified at 40 CFR 131.21)]. Under the revised regulation (also known as the Alaska Rule), USEPA must approve any new and revised standards submitted to USEPA after May 30, 2000, before they can be used for CWA purposes. The final rule also provides that standards already in effect and submitted to USEPA by May 30, 2000, may be used for CWA purposes, whether or not approved by USEPA.

6. **Antidegradation Policy.** 40 CFR 131.12 requires that State water quality standards include an antidegradation policy consistent with the federal policy. The State Water Board established California's antidegradation policy through State Water Board Resolution 68-16, which incorporates the federal antidegradation policy where the federal policy applies under federal law. It also requires that existing water quality be maintained unless degradation is justified based on specific findings. The Regional Water Board's Basin Plan implements, and incorporates by reference, both the State and federal antidegradation policies. The permitted discharge must be consistent with the antidegradation provisions of 40 CFR 131.12 and State Water Board Resolution No. 68-16. Antidegradation is discussed in more detail in section IV.C.8 of this Fact Sheet.

7. **Anti-Backsliding Requirements.** CWA sections 402(o)(2) and 303(d)(4) and 40 CFR 122.44(l) prohibit backsliding in NPDES permits. These anti-backsliding provisions require that effluent limitations in a reissued permit be as stringent as those in the previous permits, with some exceptions where limitations may be relaxed. Anti-backsliding is discussed in more detail in section IV.C.8 of this Fact Sheet.

8. **Municipal Regional Storm Water Permit.** If the Discharger implements a new development or redevelopment project that creates or replaces 5,000 square feet of impervious surface, it must comply with the requirements of Municipal Regional Storm Water Permit Order No. R2-2009-0074, NPDES No. CAS612008.

D. Impaired Water Bodies on CWA 303(d) List

In November 2006, the USEPA approved a revised list of impaired water bodies prepared by the State [hereinafter referred to as the 303(d) list] pursuant to CWA section 303(d), which requires identification of specific water bodies where it is expected that water quality standards will not be met after implementation of technology-based effluent limitations on point sources. Suisun Bay is listed as an impaired waterbody for chlordane, DDT, dieldrin, dioxin compounds, exotic species, furan compounds, mercury, nickel, PCBs, dioxin-like PCBs, and selenium. Carquinez Strait is listed as an impaired waterbody for chlordane, DDT, dieldrin, dioxins, furans, exotic species, mercury, PCBs, dioxin-like PCBs, and selenium. The SIP requires final effluent limitations for all 303(d)-listed pollutants to be consistent with total maximum daily loads (TMDLs) and associated wasteload allocations.

The Regional Water Board plans to adopt TMDLs for pollutants on the 303(d) list. TMDLs will establish wasteload allocations for point sources and load allocations for non-point sources, and will be intended to result in achieving the water quality standards for the impaired waterbodies. USEPA adopted a mercury TMDL for San Francisco Bay on February 12, 2008. Regional Water Board Order No. R2-2007-0077 regulates mercury discharge and implements the adopted mercury TMDL.

IV. RATIONALE FOR EFFLUENT LIMITATIONS AND DISCHARGE SPECIFICATIONS

The CWA requires point source dischargers to control the amount of conventional, non-conventional, and toxic pollutants discharged into waters of the United States. The control of pollutants discharged is established through effluent limitations and other requirements in NPDES permits. There are two principal bases for effluent limitations in the NPDES regulations: 40 CFR 122.44(a) requires that permits include applicable technology-based limitations and standards; and 40 CFR 122.44(d) requires that permits include water quality-based effluent limitations to attain and maintain applicable numeric and narrative water quality criteria to protect the beneficial uses of the receiving water. Where reasonable potential has been established for a pollutant, but there is no numeric objective for the pollutant, water quality-based effluent limitations may be established: (1) using USEPA criteria guidance under CWA section 304(a), supplemented where necessary by other relevant information; (2) on an indicator parameter for the pollutant of concern; or (3) using a calculated numeric water quality criterion, such as a proposed state criterion or policy interpreting the state's narrative criterion, supplemented with other relevant information, as provided in 40 CFR 122.44(d)(1)(vi).

A. Discharge Prohibitions

1. **Discharge Prohibitions III.A (No discharge different from that described in this Order):** This prohibition is the same as in the previous permit and is based on CWC section 13260, which requires filing a Report of Waste Discharge before discharges can occur. Discharges not described in the Report of Waste Discharge, and subsequently in this Order, are prohibited.

2 **Discharge Prohibitions III.B (No discharge that does not receive an initial dilution of at least 15:1):** This Order allows a conservative estimate of the actual initial dilution of 15:1 to calculate WQBELs for ammonia. This is discussed further in sections IV.C.4.b and b.(3) of this Order. These WQBELs would not be protective of water quality if the discharge did not actually achieve at least a 15:1 minimum initial dilution, thus this prohibition is necessary and warranted.

This Order permits discharge of storm water from 11 outfalls that do not provide an initial dilution of at least 10:1. Though, Discharge Prohibition No. 1 of the Basin Plan prohibits discharges having characteristics of particular concern that do not receive a minimum 10:1 initial dilution, the Basin Plan further indicates that the prohibition is to address discharges of treated sewage and other discharges where the treatment process is subject to upset. Since these storm water discharges do not contain treated sewage or wastewater from a treatment process subject to upset, the prohibition does not apply to these storm water discharges.

3 **Discharge Prohibition III.C (No bypass or overflow of untreated or partially treated wastewaters):** This prohibition is retained from the previous permit and based on 40 CFR 122.41(m) (see federal Standard Provisions, Attachment D).

B. Technology-Based Effluent Limitations

1. Scope and Authority

CWA section 301(b) and 40 CFR 122.44(a) require that permits include applicable technology-based limitations and standards. Where USEPA has not yet developed technology based standards for a particular industry or a particular pollutant, CWA section 402(a)(1) and 40 CFR 125.3 authorize the use of best professional judgment (BPJ) to derive technology-based effluent limitations on a case-by-case basis. When BPJ is used, the permit must reflect specific factors outlined at 40 CFR 125.3.

USEPA has established standards of performance (technology-based limitations and standards) for the petroleum refining industry at 40 CFR 419, *Effluent Limitations Guidelines for the Petroleum Refining Point Source Category*. Subpart B of these regulations for the Cracking Subcategory apply to discharges from the Tesoro Golden Eagle Refinery and have been used to develop limitations and requirements of this Order.

2. Applicable Technology-Based Effluent Limitations

a. Technology-Based Effluent Limitations - Discharge Point 001

40 CFR 419 requires that technology-based effluent limitations for Discharge point 001 be derived based on refinery production (the total crude oil throughput of the facility) and the treatment processes used. Derivation of the production-based effluent limitations based on 40 CFR 419 Subpart B is presented in detail in Attachment F-1 to this Order.

b. Storm Water Effluent Limitations - Discharge Points 003 - 006

Based on the requirements of 40 CFR 419 Subpart B for storm water discharges, this Order establishes technology-based limitations for Discharge Points 003 – 006. This Order also retains the narrative storm water limits of no visible oil or color.

If the limitation for total organic carbon (TOC) or oil and grease is exceeded, the additional limitations become immediately effective for the discharge point where that exceedance occurred. Derivation of the storm water effluent limitations based on 40 CFR 419 Subpart B is presented in detail in Attachment F-1 to this Order. The additional effluent limit on pH of 6.0 to 9.0 from 40 CFR 419 Subpart B is not established by this Order. The Basin Plan pH effluent limit for shallow water discharges of 6.5 to 8.5 is retained instead to satisfy anti-backsliding requirements.

C. Water Quality-Based Effluent Limitations (WQBELs) for Toxic Substances

1. Scope and Authority

a. 40 CFR 122.44(d)(1)(i) requires permits to include WQBELs for pollutants (including toxicity) that are or may be discharged at levels that cause, have reasonable potential to cause, or contribute to an excursion above any State water quality standard (Reasonable Potential). The process for determining Reasonable Potential and, when necessary, calculating WQBELs is intended to (1) protect the designated beneficial uses of the receiving water, and (2) achieve applicable WQOs in the CTR, NTR, and the Basin Plan.

b. NPDES regulations and the SIP provide the basis to establish Maximum Daily Effluent Limitations (MDELs).

(1) NPDES Regulations. 40 CFR 122.45(d) states "For continuous discharges all permit effluent limitations, standards, and prohibitions, including those necessary to achieve water quality standards, shall *unless impracticable* be stated as maximum daily and average monthly discharge limitations for all discharges other than publicly owned treatment works."

(2) SIP. SIP section 1.4 requires that WQBELs be expressed as MDELs and average monthly effluent limitations (AMELs).

MDELs are used in this Order to protect against acute water quality effects. The MDELs are necessary for preventing fish kills or mortality to aquatic organisms.

2. Applicable Beneficial Uses and Water Quality Objectives

a. Beneficial uses applicable to the receiving waters are from Basin Plan Table 2-1 and are as follows:

Table F-7. Beneficial Uses

Discharge Point	Receiving Water Name	Beneficial Use(s)
001, 003, 004 and 005-T2NW, 005-T2S-A, 005-T2S-B, 005-T2S-C, 005-T2SW, 005-T4NW, 005-T4SW, 006 [1]	Suisun Bay	Ocean, Commercial and Sport Fishing (COMM) Industrial Process Supply (PRO) Estuarine Habitat (EST) Industrial Service Supply (IND) Fish Migration (MIGR) Navigation (NAV) Preservation of Rare and Endangered Species (RARE) Water Contact Recreation (REC1) Non-Contact Water Recreation (REC2) Wildlife Habitat (WILD) Fish Spawning (SPWN)
005-AS	Carquinez Strait	Ocean, Commercial and Sport Fishing (COMM) Estuarine Habitat (EST) Industrial Service Supply (IND) Fish Migration (MIGR) Navigation (NAV) Preservation of Rare and Endangered Species (RARE) Water Contact Recreation (REC1) Non-Contact Water Recreation (REC2) Wildlife Habitat (WILD) Fish Spawning (SPWN)

[1] Outfalls 003, 004, and 005 (with the exception of 005-AS) flow to Walnut Creek, Hastings Slough, or Pacheco Slough, all of which flow to Suisun Bay. Beneficial uses of Suisun Bay apply to these creeks due to the Tributary Rule. Outfall 006 will discharge to Hastings Slough, which is tributary to Suisun Bay.

b. The WQOs applicable to the receiving waters for this discharge are from the Basin Plan; the CTR, established by USEPA at 40 CFR 131.38; and the NTR, established by USEPA at 40 CFR 131.36. Some pollutants have WQOs established by more than one of these three sources.

(1) Basin Plan. The Basin Plan specifies numeric WQOs for 10 priority toxic pollutants, as well as narrative WQOs for toxicity and bioaccumulation in order to protect beneficial uses. The pollutants for which the Basin Plan specifies numeric objectives are arsenic, cadmium, hexavalent chromium, copper in freshwater, lead, mercury, nickel, silver, zinc, and cyanide. The Basin Plan's narrative toxicity objective (section 3.3.18) states in part, "[a]ll waters shall be maintained free of toxic substances in concentrations that are lethal to or that produce other detrimental responses in aquatic organisms." The bioaccumulation objective states in part, "[c]ontrollable water quality factors shall not cause a detrimental increase in concentrations of toxic substances found in bottom sediments or aquatic life. Effects on aquatic organisms, wildlife, and human health will be considered."

(2) CTR. The CTR specifies numeric aquatic life criteria for 23 priority toxic pollutants and numeric human health criteria for 57 priority toxic pollutants. These criteria apply to all inland surface waters and enclosed bays and estuaries of the San Francisco Bay Region.

(3) NTR. The NTR establishes numeric aquatic life criteria for selenium, numeric aquatic life and human health criteria for cyanide, and numeric human health criteria for 34 other toxic organic pollutants for waters of San Francisco Bay upstream to, and including, Suisun Bay and the Delta. These NTR criteria apply to Suisun Bay, the receiving water for Discharge Point 001 for this Discharger.

(4) Technical Support Document for Water Quality-Based Toxics Controls. Where numeric objectives have not been established or updated in the Basin Plan, 40 CFR 122.44(d) requires that WQBELs be established based on USEPA criteria, supplemented where necessary by other relevant information, to attain and maintain narrative WQOs to fully protect designated beneficial uses. To determine the need for WQBELs and establish them when necessary, the Regional Water Board has followed the requirements of applicable NPDES regulations, including 40 CFR 122 and 131, as well as guidance and requirements established by the Basin Plan; USEPA's *Technical Support Document for Water Quality-Based Toxics Control* (the TSD, EPA/505/2-90-001, 1991); and the State Water Board's *Policy for Implementation of Toxics Standards for Inland Surface Waters, Enclosed Bays, and Estuaries of California, 2005* (SIP).

(5) Basin Plan Receiving Water Salinity Policy and Hardness. The Basin Plan (like the CTR and the NTR) states that the salinity characteristics (i.e., freshwater vs. saltwater) of the receiving water shall be considered in determining the applicable WQO. Freshwater objectives shall apply to discharges to waters with salinities equal to or less than one parts per thousand (ppt) at least 95 percent of the time. Saltwater objectives shall apply to discharges to waters with salinities equal to or greater than 10 ppt at least 95 percent of the time in a normal water year. For discharges to water with salinities in between these two categories, or tidally influenced freshwaters that support estuarine beneficial uses, the objectives shall be the lower of the salt or freshwater objectives (the latter calculated based on ambient hardness) for each substance.

The receiving water for Discharge Point 001 for this Discharger, Suisun Bay, is an estuarine environment based on salinity data generated through the Regional Monitoring Program (RMP) at the Pacheco Creek (BF10) sampling stations between 1993 and 2001. In that period, the receiving water's minimum salinity was 0.0 ppt, its maximum salinity was 12.8 ppt, and its average salinity was 4.4 ppt. Because the salinity was between 1 and 10 ppt in 33 percent of receiving water samples, the freshwater and the saltwater objectives from the Basin Plan, NTR, and CTR apply to this discharge.

Some freshwater metal objectives are hardness dependent. Hardness data is collected through the RMP for water bodies in the San Francisco Bay region. In determining the objectives for this Order, Regional Water Board staff used a hardness value of 88 mg/L, the adjusted geometric mean of the hardness values observed below 400 mg/L at the Pacheco Creek Station between 1993 and 2001. This represents the best available information for the hardness of the receiving water after it has mixed with the discharge.

(6) Site-Specific Metal Translators. Because 40 CFR 122.45(c) requires effluent limitations for metals to be expressed as total recoverable metal, and applicable water quality criteria for the metals are typically expressed as dissolved metal, factors or translators must be used to convert metals concentrations from dissolved to total recoverable and vice versa. In the CTR, USEPA establishes default translators that are used in NPDES permitting activities; however, site-specific conditions, such as water temperature, pH, suspended solids, and organic carbon, greatly impact the form of metal (dissolved, filterable, or otherwise) present and therefore available in the water to cause toxicity. In general, the dissolved form is more available and more toxic to aquatic life than filterable forms. Site-specific translators can be developed to account for site-specific conditions, thereby preventing exceedingly stringent or under protective water quality objectives.

For deep-water discharges to Suisun Bay, Regional Water Board staff used translators for copper and nickel based on recommendations of the Clean Estuary Partnership's *North of Dumbarton Bridge Copper and Nickel Development and Selection of Final Translators* (2005). In determining the need for and calculating WQBELs for all other metals, Regional Water Board staff used default translators from 40 CFR 131.38(b)(2), Table 2.

Table F-8. Translators for Copper and Nickel for Deepwater Discharges North of Dumbarton Bridge

	Copper	Nickel
AMEL Translator	0.38	0.27
MDEL Translator	0.67	0.57

3. Determining the Need for WQBELs

40 CFR 122.44(d)(1)(i) requires permits to include WQBELs for all pollutants (non-priority or priority) "which the Director determines are or may be discharged at a level which will cause, have the reasonable potential to cause, or contribute to an excursion above any narrative or numeric criteria within a State water quality standard" (i.e., have "Reasonable Potential"). Assessing whether a pollutant has Reasonable Potential is the fundamental step in determining whether or not a WQBEL is required. Using the methods prescribed in section 1.3 of the SIP, Regional Water Board staff analyzed the effluent data to determine if the discharge demonstrates Reasonable Potential.

a. Reasonable Potential Analysis

Using the methods prescribed in SIP section 1.3, Regional Water Board staff analyzed the effluent data to determine if the discharge demonstrates Reasonable Potential. The Reasonable Potential Analysis (RPA) compares the effluent data with numeric and narrative WQOs in the Basin Plan, NTR, and CTR.

b. Reasonable Potential Methodology

Using the methods and procedures prescribed in SIP section 1.3, Regional Water Board staff analyzed the effluent and background data and the nature of facility operations to determine if the discharge has Reasonable Potential. The RPA projects a maximum

effluent concentration (MEC) for each pollutant based on existing data, while accounting for a limited data set and effluent variability. There are three triggers in determining Reasonable Potential.

(1) The first trigger is activated if the MEC is greater than the lowest applicable WQO (MEC ≥ WQO), which has been adjusted, if appropriate, for pH, hardness, and translator data. If the MEC is greater than the adjusted WQO, then that pollutant has Reasonable Potential, and a WQBEL is required.

(2) The second trigger is activated if the observed maximum ambient background concentration (B) is greater than the adjusted WQO (B > WQO) and the pollutant is detected in any of the effluent samples.

(3) The third trigger is activated if a review of other information determines that a WQBEL is required to protect beneficial uses, even though both MEC and B are less than the WQO. A limitation may be required under certain circumstances to protect beneficial uses.

c. Effluent Data

The RPA was based on the effluent monitoring data collected by the Discharger from 2005 through 2009 for most pollutants. Regional Water Board staff analyzed these data and the nature of the discharge to determine if the discharge has Reasonable Potential.

d. Ambient Background Data

Ambient background values are used in the RPA and in the calculation of effluent limitations. For the RPA, ambient background concentrations are the observed maximum detected water column concentrations. The SIP states that for calculating WQBELs, ambient background concentrations are either the observed maximum ambient water column concentrations or, for objectives intended to protect human health from carcinogenic effects, the arithmetic mean of observed ambient water concentrations. The RMP station at Yerba Buena Island, located in the Central Bay, has been monitored for most of the inorganic (CTR constituent numbers 1–15) and some of the organic (CTR constituent numbers 16–126) toxic pollutants, and these data were used as background data in performing this RPA.

The RMP has not analyzed all the constituents listed in the CTR. On May 15, 2003, a group of several San Francisco Bay Region dischargers (known as the Bay Area Clean Water Agencies, or BACWA) submitted a collaborative receiving water study, entitled the *San Francisco Bay Ambient Water Monitoring Interim Report*. This study includes monitoring results from sampling events in 2002 and 2003 for the remaining priority pollutants not monitored by the RMP. The RPA was conducted and the WQBELs were calculated using RMP data from 1993 through 2003 for inorganics and organics at the Yerba Buena Island RMP station, and additional data from the BACWA *Ambient Water Monitoring: Final CTR Sampling Update Report* for the Yerba Buena Island RMP station.

e. RPA Determination

The MECs, most stringent applicable WQOs, and background concentrations used in the RPA are presented in the following table, along with the RPA results (yes or no) for each pollutant analyzed. Reasonable Potential was not determined for all pollutants because there are not applicable water quality objectives for all pollutants, and monitoring data were not available for others. The pollutants that exhibit Reasonable Potential are copper, selenium, lead, cyanide, dioxin toxic equivalents (dioxin-TEQ), and ammonia.

Table F-9. Summary of RPA Results

CTR #	Priority Pollutants	MEC or Minimum DL [a][b] (µg/L)	Governing WQO/WQC (µg/L)	Maximum Background or Minimum DL [a][b] (µg/L)	RPA Results [c]
1	Antimony	6.0	4300	1.8	No
2	Arsenic	9.3	36	2.46	No
3	Beryllium	0.2	No Criteria	0.215	Ud
4	Cadmium	0.08	1.1	0.13	No
5a	Chromium (III)	Not Available	200	Not Available	Ud
5b	Hexavalent chromium	1.1	11	4.4	No
6	Copper	**8.8**	14	2.55	**Yes [d]**
7	Lead	**6.3**	3.0	0.80	**Yes**
8	Mercury (303d listed)	[e]	[e]	[e]	[e]
9	Nickel (303d listed)	22	30	3.7	No
10	Selenium (303d listed)	**33**	5	0.39	**Yes**
11	Silver	0.5	2.2	0.052	No
12	Thallium	0.06	6.3	0.21	No
13	Zinc	27	86	5.1	No
14	Cyanide	**25**	1	< 0.4	**Yes**
15	Asbestos	Not Available	No Criteria	Not Available	Ud
16	2,3,7,8-TCDD (303d listed)	< 4.56E-07	1.4E-08	8.00E-9	No
	Dioxin TEQ (303d listed)	**1.64E-08**	1.4E-08	5.32E-08	**Yes**
17	Acrolein	< 5	780	< 0.5	No
18	Acrylonitrile	< 2	0.66	0.03	No
19	Benzene	<0.5	71	< 0.05	No
20	Bromoform	< 0.5	360	< 0.5	No
21	Carbon Tetrachloride	< 0.5	4.4	0.06	No
22	Chlorobenzene	< 0.5	21000	< 0.5	No
23	Chlorodibromomethane	< 0.5	34	< 0.05	No
24	Chloroethane	< 0.5	No Criteria	< 0.5	Ud
25	2-Chloroethylvinyl ether	1	No Criteria	< 0.5	Ud
26	Chloroform	1	No Criteria	< 0.5	Ud
27	Dichlorobromomethane	0.7	46	< 0.05	No
28	1,1-Dichloroethane	< 0.5	No Criteria	< 0.05	Ud
29	1,2-Dichloroethane	< 0.5	99	0.04	No
30	1,1-Dichloroethylene	< 0.5	3.2	< 0.5	No
31	1,2-Dichloropropane	< 0.5	39	< 0.05	No
32	1,3-Dichloropropylene	< 0.5	1700	Not Available	Ud
33	Ethylbenzene	< 0.5	29000	< 0.5	No
34	Methyl Bromide	< 0.5	4000	< 0.5	No
35	Methyl Chloride	1.7	No Criteria	< 0.5	Ud
36	Methylene Chloride	< 0.5	1600	0.5	No
37	1,1,2,2-Tetrachloroethane	< 0.5	11	< 0.05	No
38	Tetrachloroethylene	< 0.5	8.9	< 0.5	No

CTR #	Priority Pollutants	MEC or Minimum DL [a][b] (µg/L)	Governing WQO/WQC (µg/L)	Maximum Background or Minimum DL [a][b] (µg/L)	RPA Results [c]
39	Toluene	< 0.5	200000	< 0.3	No
40	1,2-Trans-Dichloroethylene	< 0.5	140000	< 0.5	No
41	1,1,1-Trichloroethane	< 0.5	No Criteria	< 0.5	Ud
42	1,1,2-Trichloroethane	< 0.5	42	< 0.05	No
43	Trichloroethylene	< 0.5	81	< 0.5	No
44	Vinyl Chloride	< 0.5	525	< 0.5	No
45	2-Chlorophenol	< 2	400	< 1.2	No
46	2,4-Dichlorophenol	< 1	790	< 1.3	No
47	2,4-Dimethylphenol	< 2	2300	< 1.3	No
48	2-Methyl- 4,6-Dinitrophenol	< 5	765	< 1.2	No
49	2,4-Dinitrophenol	< 5	14000	< 0.7	No
50	2-Nitrophenol	< 5	No Criteria	< 1.3	Ud
51	4-Nitrophenol	< 5	No Criteria	< 1.6	Ud
52	3-Methyl 4-Chlorophenol	< 1	No Criteria	< 1.1	Ud
53	Pentachlorophenol	< 1	0.0059	< 1.0	No
54	Phenol	< 1	4600000	< 1.3	No
55	2,4,6-Trichlorophenol	< 5	6.5	< 1.3	No
56	Acenaphthene	< 0.1	2700	0.0015	No
57	Acenaphthylene	< 0.1	No Criteria	0.00053	Ud
58	Anthracene	< 0.1	110000	0.0005	No
59	Benzidine	< 5	0.00054	< 0.0015	No
60	Benzo(a)Anthracene	< 0.1	0.049	0.0053	No
61	Benzo(a)Pyrene	< 0.1	0.049	0.00029	No
62	Benzo(b)Fluoranthene	< 0.1	0.049	0.0046	No
63	Benzo(ghi)Perylene	< 0.1	No Criteria	0.0027	Ud
64	Benzo(k)Fluoranthene	< 0.05	0.049	0.0015	No
65	Bis(2-Chloroethoxy)Methane	< 5	No Criteria	< 0.3	Ud
66	Bis(2-Chloroethyl)Ether	< 1	1.4	< 0.3	No
67	Bis(2-Chloroisopropyl)Ether	< 2	170000	Not Available	Ud
68	Bis(2-Ethylhexyl)Phthalate	< 2	5.9	<0.5	No
69	4-Bromophenyl Phenyl Ether	< 5	No Criteria	< 0.23	Ud
70	Butylbenzyl Phthalate	< 5	5200	<0.52	No
71	2-Chloronaphthalene	< 5	4300	< 0.3	No
72	4-Chlorophenyl Phenyl Ether	< 5	No Criteria	< 0.3	Ud
73	Chrysene	< 0.1	0.049	0.0024	No
74	Dibenzo(a,h)Anthracene	< 0.1	0.049	0.00064	No
75	1,2-Dichlorobenzene	< 0.5	17000	< 0.8	No
76	1,3-Dichlorobenzene	< 0.5	2600	< 0.8	No
77	1,4-Dichlorobenzene	< 0.5	2600	< 0.8	No
78	3,3 Dichlorobenzidine	< 5	0.077	< 0.001	No
79	Diethyl Phthalate	< 2	120000	< 0.24	No
80	Dimethyl Phthalate	< 2	2900000	< 0.24	No
81	Di-n-Butyl Phthalate	< 5	12000	<0.5	No
82	2,4-Dinitrotoluene	< 5	9.1	< 0.27	No
83	2,6-Dinitrotoluene	< 5	No Criteria	< 0.29	Ud
84	Di-n-Octyl Phthalate	< 5	No Criteria	< 0.38	Ud
85	1,2-Diphenylhydrazine	< 1	0.54	0.0037	No
86	Fluoranthene	< 0.1	370	0.011	No
87	Fluorene	< 0.1	14000	0.00208	No
88	Hexachlorobenzene	< 1	0.00077	0.000022	No
89	Hexachlorobutadiene	< 1	50	< 0.3	No
90	Hexachlorocyclopentadiene	< 1	17000	< 0.31	No
91	Hexachloroethane	< 1	8.9	< 0.2	No

CTR #	Priority Pollutants	MEC or Minimum DL [a][b] (µg/L)	Governing WQO/WQC (µg/L)	Maximum Background or Minimum DL [a][b] (µg/L)	RPA Results [c]
92	Indeno(1,2,3-cd)Pyrene	< 0.1	0.049	0.004	No
93	Isophorone	< 1	600	< 0.3	No
94	Naphthalene	< 0.1	No Criteria	0.0023	Ud
95	Nitrobenzene	< 1	1900	< 0.25	No
96	N-Nitrosodimethylamine	< 5	8.1	< 0.3	No
97	N-Nitrosodi-n-Propylamine	< 1	1.4	< 0.001	No
98	N-Nitrosodiphenylamine	< 1	16	< 0.001	No
99	Phenanthrene	< 0.1	No Criteria	0.0061	Ud
100	Pyrene	< 0.1	11000	0.0051	No
101	1,2,4-Trichlorobenzene	< 5	No Criteria	< 0.3	Ud
102	Aldrin	< 0.005	0.00014	Not Available	No
103	Alpha-BHC	< 0.01	0.013	0.000496	No
104	beta-BHC	< 0.005	0.046	0.000413	No
105	gamma-BHC	< 0.01	0.063	0.0007034	No
106	delta-BHC	< 0.005	No Criteria	0.000042	Ud
107	Chlordane (303d listed)	< 0.02	0.00059	0.00018	No
108	4,4'-DDT (303d listed)	< 0.01	0.00059	0.000066	No
109	4,4'-DDE (linked to DDT)	< 0.01	0.00059	0.000693	No
110	4,4'-DDD	< 0.01	0.00084	0.000313	No
111	Dieldrin (303d listed)	< 0.01	0.00014	0.000264	No
112	Alpha-Endosulfan	< 0.01	0.0087	0.000031	No
113	beta-Endolsulfan	< 0.01	0.0087	0.000069	No
114	Endosulfan Sulfate	< 0.01	240	0.0000819	No
115	Endrin	< 0.01	0.0023	0.00004	No
116	Endrin Aldehyde	< 0.01	0.81	Not Available	Ud
117	Heptachlor	< 0.01	0.00021	0.000019	No
118	Heptachlor Epoxide	< 0.01	0.00011	0.000019	No
119-125	PCBs sum (303d listed)	< 0.1	0.00017	0.00146	No
126	Toxaphene	< 0.5	0.0002	Not Available	Ud
	Total PAHs	<0.019	15	0.05145	No
	Total Ammonia (mg/L)	**22.1**	1.24	0.2	**Yes**

(a) The MEC or maximum background concentration is the actual detected concentration unless there is a "<" sign before it, in which case the value shown is the minimum detection level.

(b) The MEC or maximum background concentration is "Not Available" when there are no monitoring data for the constituent.

(c) RPA Results = Yes, if MEC > WQO/WQC, or B > WQO/WQC and MEC is detected;
= No, if MEC and B are < WQO/WQC or all effluent data are undetected;
= Undetermined (Ud), if no criteria have been promulgated;
= Cannot Determine, if there are insufficient data.

(d) Section 7.2.2.2 of the Basin Plan requires that individual NPDES permits for municipal and industrial wastewater treatment facilities include WQBELs for copper.

(e) Mercury from wastewater discharges is regulated by NPDES Permit No. CA0038849 (currently Regional Water Board Order No. R2-2007-0077) that implements the San Francisco Bay Mercury TMDL.

(1) Constituents with limited data. The Discharger has performed sampling and analysis for the constituents listed in the CTR. This data set was used to perform the RPA. In some cases, Reasonable Potential cannot be determined because effluent data are limited or ambient background concentrations are not available. The Discharger will continue to monitor for these constituents in the effluent using analytical methods that provide the best feasible detection limits. When additional data become available, further RPA will be conducted to determine whether to add numeric effluent limitations to this Order or to continue monitoring.

(2) Pollutants with no Reasonable Potential. WQBELs are not included in this Order for constituents that do not demonstrate Reasonable Potential; however, monitoring for such pollutants is still required. If concentrations of these constituents are found to have increased significantly, section VI.C.2.a of this Order requires the Discharger to investigate the source of the increase. Remedial measures are required if the increase poses a threat to water quality.

4. WQBEL Calculations

a. Pollutants with Reasonable Potential

WQBELs were developed for the toxic and priority pollutants that were determined to have Reasonable Potential. The WQBELs were calculated based on appropriate WQOs and the appropriate procedures specified in SIP section 1.4. The WQOs used for each pollutant with Reasonable Potential are discussed below.

b. Dilution Credit

The SIP provides the basis for any dilution credit. The outfall at Discharge Point 001 is designed to achieve a minimum initial dilution of 10:1. The actual dilution has been estimated using the USEPA-supported plume-modeling program UDKHDEN. Model results were reported in a technical report prepared by S.R. Hansen & Associates, titled *Initial Dilution Modeling and Dye Dispersion Studies for the Effluent Discharged from the Tosco Avon Refinery* (March, 1990). The worst-case initial dilution factor calculated was 15:1 at a flow rate of 0.176 m^3/s (4 MGD). This dilution factor was calculated at slack tide and under stratified conditions. The flow rate of 4 MGD is approximately equal to the average flow rate reported by the Discharger of 4.1 MGD.

Based on RMP monitoring data for San Francisco Bay, there is variability in the receiving water, and the hydrology of the receiving water is very complex. Therefore, it is uncertain how representative the ambient background data used to determine the effluent limitations is. Pursuant to SIP section 1.4.2.1, "dilution credit may be limited or denied on a pollutant-by-pollutant basis…." The detailed basis for each pollutant is explained below.

(1) Bioaccumulative Pollutants: For certain bioaccumulative pollutants, dilution credit is significantly restricted or denied. This determination is based on available data on concentrations of these pollutants in aquatic organisms, sediment, and the water column. Selenium, PCBs, dioxin and furan compounds, dioxin-like PCBs, nickel, chlordane, dieldrin, and 4,4'-DDT appear on the CWA section 303(d) list for Suisun Bay because they impair Suisun Bay's beneficial uses. The following factors suggest insufficient assimilative capacity in San Francisco Bay for these pollutants.

(a) Bioaccumulative Pollutants Excluding Selenium

Tissue samples taken from fish in Suisun Bay show the presence of these pollutants at concentrations greater than screening levels (*Contaminant Concentrations in Fish from San Francisco Bay*, May 1997). The results of the 1994 San Francisco Bay pilot study, presented in *Contaminated Levels in Fish*

Tissue from San Francisco Bay (Regional Water Board, 1994) also showed elevated levels of chemical contaminants in fish tissues. The Office of Environmental Health and Hazard Assessment completed a preliminary review of the data in the 1994 report and subsequently issued an interim consumption advisory covering certain fish species in San Francisco Bay in December 1994. This advisory is still in effect for exposure to sport fish contaminated with mercury, dioxins, and pesticides (e.g., DDT).

Dilution credits are denied for all bioaccumulative pollutants on the 303(d) list except selenium, discussed below. Denial of dilution credits is appropriate given the lack of data and significant uncertainty about how different sources of these pollutants contribute to bioaccumulation.

(b) Selenium

For selenium, San Francisco Bay waterfowl tissue data presented in the California Department of Fish and Game's Selenium Verification Study (1986-1990) showed elevated selenium levels in the livers of waterfowl that feed on bottom-dwelling organisms, such as clams. In addition, the State's Office of Environmental Health and Hazard Assessment issued an advisory in 1987 for consumption of two species of diving ducks in the North Bay found to have high tissue levels of selenium. This advisory is still in effect. Elevated selenium levels have also been found in the tissue of white sturgeon, which also feed on clams.

This information, together with high uncertainty regarding how different sources of selenium contribute to bioaccumulation, have previously led the Regional Water Board to deny dilution credit for selenium. However, refineries have significantly reduced their discharges of selenium, and altered the chemical forms of the selenium they discharge so the selenium is generally less bioavailable. Also, substantially more information has become available to advance the development of a selenium TMDL for north San Francisco Bay segments. Recent work reduces some uncertainties regarding selenium sources, fate, and transport, and suggests that some assimilative capacity remains in the receiving waters. Based on this preliminary information, Regional Water Board staff concludes that limited dilution credit for selenium may be granted such that existing refinery performance is maintained, pending the completion of a selenium TMDL. This Order grants limited dilution credits for selenium, but only to a level that maintains existing refinery performance. When a selenium TMDL is completed, the Regional Water Board will amend these limits to be consistent with TMDL wasteload allocations. Granting dilution credits for selenium at this time is appropriate specifically because of the substantial new information about selenium in San Francisco Bay now available. This information does not apply to other pollutants. To calculate selenium WQBELs, this order uses a dilution credit of D = 9 (10:1 dilution).

(2) Non-bioaccumlative Pollutants: For non-bioaccumulative constituents (except for ammonia), a conservative dilution allowance of 10:1 (D = 9) has been assigned. The 10:1 dilution allowance is consistent with the previous permit and is also based on

Basin Plan Prohibition 1 (Table 4-1), which prohibits discharges with less than 10:1 dilution. SIP section 1.4.2 allows for limiting the dilution credit:

(a) A far-field background station is appropriate because the receiving water body (Suisun Bay) is a very complex estuarine system with highly variable and seasonal upstream freshwater inflows and diurnal tidal saltwater inputs. SIP section 1.4.3 allows background conditions to be determined on a discharge-by-discharge or water body-by-water body basis. Regional Water Board staff has chosen to use a water body-by-water body basis due to inherent uncertainties in characterizing ambient background conditions in a complex estuarine system on a discharge-by-discharge basis.

The Yerba Buena Island RMP monitoring station, relative to other RMP stations, fits SIP guidance criteria for establishing background conditions. The SIP requires that background water quality data be representative of the ambient receiving water that will mix with the discharge. The water quality data from the Yerba Buena Island monitoring station is representative of the water that will mix with discharges from Discharge Point 001.

(b) Because of the complex hydrology of Suisun Bay, a mixing zone has not been established. There are uncertainties in accurately determining the mixing zones for each discharge. The models that have been used to predict dilution have not considered the three dimensional nature of Suisun Bay currents resulting from the interaction of tidal flushes and seasonal fresh water outflows. Being heavier and colder than fresh water, ocean salt water enters San Francisco Bay on twice-daily tidal cycles, generally beneath the warmer fresh water that flows seaward. When these waters mix and interact, complex circulation patterns occur due to the varying densities of the fresh and ocean waters. The complex patterns occur throughout San Francisco Bay, but are most prevalent in the San Pablo, Carquinez Strait, and Suisun Bay areas. The locations of this mixing and interaction change, depending on the strength of each tide. Additionally, sediment loads from the Central Valley change on a long-term basis, affecting the depth of different parts of Suisun Bay, resulting in alteration of flow patterns, mixing, and dilution at the outfall.

(3) Ammonia: In calculating WQBELs for ammonia, a non-persistent pollutant that quickly disperses and degrades, the estimated minimum initial dilution ratio of 15:1 was used for the acute objective and estimated median initial dilution of 130:1 was used for the chronic annual median objective. This is justified because ammonia is quickly dispersed and degraded to a non-toxic state, and cumulative toxicity effects are unlikely.

c. Calculation of Pollutant-Specific WQBELs

(1) Copper

(a) *Copper WQOs*. The most stringent applicable WQOs for copper are the Basin Plan's site-specific chronic and acute marine WQOs, 6.0 and 9.4 micrograms per liter (µg/L), respectively, expressed as dissolved metal. Regional Water Board

staff converted these WQOs to total recoverable metal using site-specific translators of 0.38 (chronic) and 0.67 (acute). This results in a chronic water quality criterion of 16 µg/L and an acute water quality criterion of 14 µg/L.

(b) *RPA Results*. Even though the MEC for copper of 8.8 µg/L is below the most stringent applicable WQO for this pollutant, this Order establishes effluent limitations. This is because Section 7.2.2.2 of the Basin Plan requires that individual NPDES permits for municipal and industrial wastewater treatment facilities include WQBELs for copper.

(c) C*opper WQBELs*. WQBELs for copper calculated according to SIP procedures using a coefficient of variation (CV) of 0.45 and a dilution credit of D = 9 are an AMEL of 65 µg/L and an MDEL of 120 µg/L. The previous permit contained more stringent limits of an AMEL of 13 µg/L and an MDEL of 24 µg/L.

(d) *Anti-backsliding*. This Order retains the more stringent WQBELs from the previous permit, thereby satisfying anti-backsliding requirements.

(2) Selenium

(a) *Selenium WQC.* The most stringent applicable WQC for selenium are from the NTR for protection of aquatic life. The NTR establishes a saltwater and freshwater acute criterion of 20.0 µg/L and chronic criterion of 5.0 µg/L.

(b) *RPA Results.* This Order establishes effluent limitations for selenium because the MEC of 33 µg/L exceeds the most stringent applicable WQC for this pollutant, demonstrating Reasonable Potential by Trigger 1.

(c) *Selenium WQBELs.* Based on a dilution credit of 10:1 (D=9), WQBELs for selenium calculated according to SIP procedure using a CV of 0.37 are an AMEL of 41 µg/L and an MDEL of 66 µg/L. An amendment (Order No. R2-2010-0057) to the previous permit contained an AMEL of 42 µg/L and an MDEL of 50 µg/L. Therefore, consistent with maintaining current performance, the WQBELs in this Order are an AMEL of 41 µg/L and an MDEL of 50 µg/L.

(d) *Anti-backsliding.* This Order retains the more stringent MDEL from the previous permit and includes a more stringent AMEL, thereby satisfying anti-backsliding requirements.

(3) Lead

(a) *Lead WQOs.* The most stringent applicable WQOs for lead are the Basin Plan's freshwater acute and chronic objectives for protection of aquatic life of 69 µg/L and 2.7 µg/L, as calculated using the receiving water hardness value of 88 mg/L, as $CaCO_3$.

(b) *RPA Results.* This Order establishes effluent limitations for lead because the MEC (6.3 µg/L) exceeds the most stringent applicable WQO for this pollutant, demonstrating Reasonable Potential by Trigger 1.

(c) *Lead WQBELs.* WQBELs for lead calculated according to SIP procedure using a CV of 1.0 and a dilution credit of D = 9 are an AMEL of 14 ug/L and an MDEL of 36 ug/L. The previous permit contained more stringent limits of an AMEL of 3.7 µg/L and an MDEL of 7.8 µg/L.

(d) *Anti-backsliding.* This Order retains the more stringent WQBELs from the previous permit, thereby satisfying anti-backsliding requirements.

(4) Cyanide

(a) *Cyanide WQOs*. The most stringent applicable WQOs for cyanide are the Basin Plan's site-specific chronic and acute marine WQOs, 9.4 and 2.9 µg/L, respectively, for protection of marine aquatic life in San Francisco Bay.

(b) *RPA Results*. This Order establishes effluent limitations for cyanide because the MEC of 25 µg/L exceeds the most stringent applicable WQO of 2.9 µg/L, demonstrating Reasonable Potential by Trigger 1.

(c) *Cyanide WQBELs*. WQBELs for cyanide calculated according to SIP procedures using the default CV of 0.6 and a dilution credit of 10:1 are an MDEL of 42 µg/L and an AMEL of 21 µg/L. An amendment (Order No. R2-2010-0056) to the previous permit contained an AMEL of 21 µg/L and an MDEL of 42 µg/L.

(d) *Anti-backsliding*. Anti-backsliding requirements are satisfied because the calculated limits are the same as the previous permit.

(5) Dioxin-TEQ

(a) *Dioxin-TEQ WQO*. The Basin Plan's narrative WQO for bioaccumulative substances states:

Many pollutants can accumulate on particulates, in sediments, or bioaccumulate in fish and other aquatic organisms. Controllable water quality factors shall not cause a detrimental increase in concentrations of toxic substances found in bottom sediments or aquatic life. Effects on aquatic organisms, wildlife, and human health will be considered.

Because it is the consensus of the scientific community that dioxins and furans associate with particulates, accumulate in sediments, and bioaccumulate in the fatty tissue of fish and other organisms, the Basin Plan's narrative bioaccumulation WQO applies to these pollutants. Elevated levels of dioxins and furans in fish tissue in San Francisco Bay demonstrate that the narrative bioaccumulation WQO is not being met. USEPA has therefore included Suisun Bay as impaired by dioxin and furan compounds in the current 303(d) listing of receiving waters where water quality objectives are not being met after imposition of applicable technology-based requirements.

The CTR establishes a numeric WQO for 2,3,7,8-tetrachlorinated dibenzo-p-dioxin (2,3,7,8-TCDD) of 1.4×10^{-8} µg/L for the protection of human health when aquatic

organisms are consumed. When the CTR was promulgated, USEPA stated its support of the regulation of other dioxin and dioxin-like compounds through the use of toxic equivalents (TEQs) in NPDES permits. For California waters, USEPA stated specifically, "if the discharge of dioxin or dioxin-like compounds has reasonable potential to cause or contribute to a violation of a narrative criterion, numeric WQBELs for dioxin or dioxin-like compounds should be included in NPDES permits and should be expressed using a TEQ scheme." [65 Fed. Reg. 31682, 31695 (2000)]. This procedure, developed by the World Health Organization (WHO) in 1998, uses a set of toxicity equivalency factors (TEFs) to convert the concentration of any congener of dioxin or furan into an equivalent concentration of 2,3,7,8-TCDD.

This Order uses the 1998 TEF scheme and the CTR WQO for 2,3,7,8-TCDD to translate the Basin Plan's narrative bioaccumulation objective into a numeric criterion to use in the RPA and from which to derive effluent limits. This translation also incorporates bioaccumulation equivalency factors (BEFs) USEPA developed for the Great Lakes System to account for differing bioaccumulation rates among dioxin congeners in the food web (40 CFR 132, Appendix F). USEPA supports the use of these BEFs beyond the Great Lakes System, stating, "…EPA believes that national bioaccumulation factors are broadly applicable to sites throughout the United States and can be applied to achieve an acceptable degree of accuracy when estimating bioaccumulation potential at most sites."

(b) *RPA Results*. To determine if Reasonable Potential exists for dioxin or dioxin-like compounds in this discharge, Regional Water Board staff used TEFs and BEFs to express the measured concentrations of 16 dioxin congeners in effluent and background samples as 2,3,7,8-TCDD. These "equivalent" concentrations were then compared to the CTR numeric criterion for 2,3,7,8-TCDD (1.4×10^{-8} µg/L).

This Order establishes effluent limitations for dioxin-TEQ because the MEC (1.64×10^{-8} µg/L) exceeds the WQO for dioxin-TEQ translated from the bioaccumulation objective (1.4×10^{-8} µg/L), demonstrating Reasonable Potential by Trigger 1.

(c) *WQBELs*. WQBELs for dioxin–TEQ calculated using SIP procedures as guidance, with a default CV of 0.6 and no dilution credit, are an AMEL of 1.4×10^{-8} and an MDEL of 2.8×10^{-8} µg/L. The previous permit included an interim limitation for dioxin-TEQ of $6.5*10^{-7}$ µg/L. Additionally, the previous permit required that, starting July 2, 2010, the Discharger was to comply with the waste load allocation in the TMDL for dioxins and furans, or no net loading. Because a TMDL and an appropriate mass offset plan to comply with no net loading have not been developed, this Order establishes final WQBELs for dioxin-TEQ.

(d) *Anti-backsliding*. Anti-backsliding requirements are satisfied because the final limit of not net loading for dioxin-TEQ in the previous permit never became effective.

(6) Ammonia

(a) *Ammonia WQO.* The Basin Plan contains WQOs for un-ionized ammonia of 0.025 mg/L as an annual median and 0.16 mg/L as a maximum upstream of the San

Francisco Bay Bridge. Regional Water Board staff translated these WQOs from un-ionized ammonia concentrations to equivalent total ammonia concentrations (as nitrogen) since (1) sampling and laboratory methods are not available to analyze for un-ionized ammonia; and (2) the fraction of total ammonia that exists in the toxic un-ionized form depends on the pH, salinity, and temperature of the receiving water. To translate the Basin Plan un-ionized ammonia objective, Regional Water Board staff used pH, salinity, and temperature data from March 1993 to August 2003 from the nearest RMP station to the outfall (in this case, the Pacheco Creek RMP station [BF10]). Regional Water Board staff used the following equations to determine the fraction of total ammonia that would exist in the toxic un-ionized form in the estuarine receiving water where the various measurements were taken from 1993-2003 (USEPA, 1989, *Ambient Water Quality Criteria for Ammonia (Saltwater)–1989,* EPA Publication 440/5-88-004):

For salinity > 10 ppt: fraction of NH_3 = $\frac{1}{1+10^{(pK-pH)}}$

Where:

$$pK = 9.245 + 0.116(I) + 0.0324(298 - T) + \frac{0.0415(P)}{(T)}$$

I = Molal ionic strength of saltwater = $\frac{19.9273(S)}{(1{,}000 - 1.005109[S])}$

S = Salinity (parts per thousand)

T = Temperature in degrees Kelvin

P = Pressure (one atmosphere)

Regional Water Board staff then used the 90th percentile and median un-ionized ammonia fractions from 1993 to 2003 to express the acute and chronic un-ionized ammonia WQOs as total ammonia concentrations. This approach is consistent with USEPA guidance on translating dissolved metal WQOs to total recoverable metal WQOs (USEPA, 1996, *The Metals Translator: Guidance for Calculating a Total Recoverable Limit from a Dissolved Criterion,* EPA Publication Number 823-B-96-007). The equivalent total ammonia acute and chronic WQOs calculated for this discharge are 4.7 mg/L and 1.2 mg/L, respectively.

(b) *RPA Results.* Basin Plan section 4.5.5.2 indicates that WQBELs shall be calculated according to the SIP. Basin Plan section 3.3.20 refers to ammonia as a toxic pollutant. Therefore, The SIP methodology was used to perform the RPA and to calculate effluent limitations for ammonia. This Order establishes effluent limitations for total ammonia because the MEC of 22 mg/L exceeds the most stringent applicable translated WQO for this pollutant, demonstrating Reasonable Potential by Trigger 1.

(c) *WQBELs.* The total ammonia WQBELs calculated according to SIP procedures using a CV of 1.1 and a dilution credit of D = 14 are an MDEL of 67 mg/L and an AMEL

of 26 mg/L. Regional Water Board staff made statistical adjustments to the WQBEL calculations because:

- the Basin Plan's chronic WQO for un-ionized ammonia is based on an annual median instead of the typical 4-day average;
- the SIP assumes a 4-day average concentration and monthly sampling frequency of 4 days per month to calculate effluent limitations based on chronic criteria, whereas a 365-day average and a monitoring frequency of 30 days per month, reflecting the actual basis of the WQO and actual sampling frequency, were used here.

These statistical adjustments are supported by USEPA's *Water Quality Criteria; Notice of Availability; 1999 Update of Ambient Water Quality Criteria for Ammonia,* published on December 22, 1999, in the Federal Register.

Following SIP methodology, Regional Water Board staff used the maximum ambient background total ammonia concentration to calculate effluent limitations based on the acute criterion; and the median background total ammonia concentration to calculate effluent limitations based on the chronic criterion. Because the Basin Plan's chronic un-ionized ammonia objective is an annual median, the median background concentration is more representative of ambient conditions than a daily maximum.

The newly calculated limitations take into account the deep water nature of the discharge and the non-persistent nature of ammonia and therefore, are based on actual initial dilution.

	Effluent Limitations for Total Ammonia (as N)	
	AMEL	**MDEL**
Based on Basin Plan	26 µg/L	67 µg/L

(e) *Anti-backsliding.* Anti-backsliding requirements are satisfied because the previous permit did not include ammonia WQBELs.

d. Effluent Limit Calculations

Table F-10 below summarizes the effluent limit calculations.

Table F-10. Effluent Limit Calculations

PRIORITY POLLUTANTS	**Copper**	**Selenium**	**Lead**	**Cyanide**	**Dioxin TEQ**	**Ammonia**	
Units	**ug/L**	**ug/L**	**ug/L**	**ug/L**	**ug/L**	**mg/L**	**mg/L**
Basis and Criteria type	Basin Plan SSOs	NTR Criterion for the Bay	Basin Plan & CTR FW Aquatic Life	Basin Plan SSOs	Basin Plan Narrative	Basin Plan Aquatic Life	Basin Plan Aquatic Life
CTR Criteria -Acute	-----	-----	69	9.4	-----		
CTR Criteria -Chronic	-----	-----	2.7	2.9	-----		

PRIORITY POLLUTANTS	Copper	Selenium	Lead	Cyanide	Dioxin TEQ	Ammonia	
Units	**ug/L**	**ug/L**	**ug/L**	**ug/L**	**ug/L**	**mg/L**	**mg/L**
SSO Criteria -Acute (December 2004) (Diss.)	3.9						
SSO Criteria -Chronic (December 2004) (Diss.)	2.5						
Water Effects ratio (WER)	2.4	1	1	1	1		
Lowest WQO					1.4E-08	1.24	4.66
Site Specific Translator - MDEL	0.67	-----	-----	-----	-----		
Site Specific Translator - AMEL	0.38	-----	-----	-----	-----		
Dilution Factor (D) (if applicable)	9	9	9	9	0	129	14
No. of samples per month	4	4	4	4	4	4	4
Aquatic life criteria analysis required? (Y/N)	Y	Y	Y	Y	N	Y	Y
HH criteria analysis required? (Y/N)	N	N	N	Y	Y	N	N
Applicable Acute WQO	14	20	69	9.4			4.66
Applicable Chronic WQO	16	5	2.7	2.9		1.24	
HH criteria	-----	-----	-----	220000	1.4E-08		
Background (Maximum Conc for Aquatic Life calc)	2.6	0.39	0.80	0.4	5.32E-08	0.07	0.2
Background (Average Conc for Human Health calc)	-----	-----	-----	0.4	2.0E-08		
Is the pollutant Bioaccumulative(Y/N)? (e.g., Hg)	N	Y	N	N	Y	N	N
ECA acute	115	196.5	686.8	90		No Acute WQO	67
ECA chronic	139	46.490	19.8	25		152	No Chronic WQO
ECA HH				2199996	1.4E-08		
No. of data points <10 or at least 80% of data reported non detect? (Y/N)	N	N	N	Y	Y	N	N
Avg of effluent data points	3.3	11.6	1.2			6.8	6.8
Std Dev of effluent data points	1.5	4.2	1.2			7.5	7.5
CV calculated	0.45	0.37	1.01	N/A	N/A	1.10	1.10
CV (Selected) - Final	0.45	0.37	1.01	0.6	0.60	1.10	1.10
ECA acute mult99	0.40	0.47	0.20	0.32			0.188
ECA chronic mult99	0.61	0.67	0.37	0.53		0.877	
LTA acute	46.11	91.55	139.17	29.0			12.62
LTA chronic	84.85	30.95	7.34	13.4		133.41	
minimum of LTAs	46.11	30.95	7.34	13.4		133.41	12.62
AMEL mult95	1.41	1.33	1.95	1.55	1.55	1.4	2.0
MDEL mult99	2.49	2.15	4.93	3.11	3.11	5.3	5.3
AMEL (aq life)	65	41	14	20.8		181	26
MDEL(aq life)	115	66	36	41.7		709	67

PRIORITY POLLUTANTS	Copper	Selenium	Lead	Cyanide	Dioxin TEQ	Ammonia	
Units	**ug/L**	**ug/L**	**ug/L**	**ug/L**	**ug/L**	**mg/L**	**mg/L**
MDEL/AMEL Multiplier	1.77	1.62	2.53	2.01	2.01	3.9	2.6
AMEL (human hlth)				2199996	1.4E-08		
MDEL (human hlth)				4413609	2.8E-08		
minimum of AMEL for Aq. life vs HH	65	41	14	20.8	1.4E-08	181	26
minimum of MDEL for Aq. Life vs HH	115	66	36	41.7	2.8E-08	709	67
Current limit in permit (30-day average)	13	42	3.7	21	6.5E-07	-----	-----
Current limit in permit (daily)	24	50	7.8	42	-----	-----	-----
Final limit - AMEL	13	41	3.7	21	1.4E-08	181	26
Final limit - MDEL	24	50	7.8	42	2.8E-08	709	67
Max Effl Conc (MEC)	8.8	33	6.3	25	1.64E-08	22	22

e. Chlorine Residual Limitation

The chlorine residual limit of 0.0 mg/L, as an instantaneous maximum, is a technology-based limit representative of, and intended to ensure, adequate and reliable dechlorination of disinfected wastewater. This limit is based on the Basin Plan (Table 4-2).

5. Total Coliform Organisms Limitation

The purpose of this effluent limitation is to ensure adequate disinfection of the discharge in order to protect beneficial uses of the receiving waters. Effluent limits are based on water quality objectives for bacteriological parameters for receiving water beneficial uses. Water quality objectives are given in terms of parameters, which serve as surrogates for pathogenic organisms. The traditional parameter for this purpose is coliform bacteria, either as total coliform or as fecal coliform. The Basin Plan's Table 4-2 (pg. 4–69) and its footnotes allow fecal coliform limitations to be substituted for total coliform limitations provided that the Discharger conclusively demonstrates "through a program approved by the Board that such substitution will not result in unacceptable adverse impacts on the beneficial uses of the receiving waters." Until the Discharger undertakes a bacteriological study to conclusively demonstrate that substitution of fecal coliform for total coliform limits would be protective of the beneficial uses of the receiving water, the coliform effluent limitation will continue to be expressed as total coliform. Total coliform limits are:

i. The moving median value for the Most Probable Number (MPN) of total coliform bacteria in five (5) consecutive samples shall not exceed 240 MPN/100 ml; and,

ii. Any single sample shall not exceed 10,000 MPN/100 ml.

6. Selenium Mass Emission Limitation

SIP section 2.1.1 states that for bioaccumulative compounds on the 303(d) list, the Regional Water Board should consider whether mass-loading limits should be limited to current levels.

The Regional Water Board finds that mass-loading limits are warranted for selenium. The purpose of this mass-loading limit is to further ensure that this Discharger maintains its existing selenium treatment performance, and does not further contribute to impairment of the narrative objective for bioaccumulation in Suisun Bay, pending a TMDL.

The mass emission limit is based on the average monthly effluent limit (calculated above) and the average daily effluent flows from 2004 through 2009. The mass loading limit is calculated using the average monthly effluent limit, instead of the maximum daily effluent limit, because the average monthly effluent limit better represents long-term performance.

The mass loading limit is calculated using the following equation.

Mass Emission (kg/day) = (Flow, MGD) x (Selenium Concentration, mg/L) x 3.785
Mass Emission (kg/day) = 4.1 MGD x 0.041 mg/L x 3.785 = 0.64 kg/day

The existing mass emission limitation for selenium is 0.45 kg/day as a running annual average. Because the newly-calculated mass emission limit exceeds the existing mass emission limits, this Order retains the existing limit to maintain current performance and avoid unnecessary backsliding.

The mass emission limit is expressed as a running annual average to be consistent with the limit in the previous permit. The running annual average is the arithmetic average of the current day's mass load and the mass loads for each of the previous 364 days, as shown in the following example:

$$\text{Annual Mass emission rate (kg/day)} = \frac{3.785}{N}\sum_{i=1}^{N} Q_i C_i$$

where:

N = number of samples analyzed in any calendar year
Q_i = flow rate (MGD) associated with the Nth sample
C_i = selenium concentration (mg/L) associated with the Nth sample

Flow (MGD) = Average of monthly plant effluent flows.

Anti-backsliding requirements are satisfied because the mass-loading limit in this Order is not less stringent than the previous mass-loading limit.

7. Whole Effluent Acute Toxicity

This Order includes effluent limitations for whole-effluent acute toxicity that are unchanged from the previous permit and based on the Basin Plan. All bioassays are to be performed using the most up-to-date USEPA protocol and the most sensitive species as specified in writing by the Executive Officer based on the most recent screening test results. Bioassays shall be conducted in compliance with *Methods for Measuring the Acute Toxicity of Effluents and Receiving Water to Freshwater and Marine Organisms*, currently 5th Edition (EPA-821-R-02-012), with exceptions granted to the Discharger by the Executive Officer and the

Environmental Laboratory Accreditation Program (ELAP) upon the Discharger's request with justification.

8. Whole Effluent Chronic Toxicity

a. *Permit Requirements*. This Order includes effluent limitations for chronic toxicity that are unchanged from the previous permit and based on the Basin Plan. The permit requirements for chronic toxicity are also consistent with the CTR and SIP requirements.

b. *Screening Phase Study*. The Discharger implemented a chronic toxicity screening phase monitoring program for chronic toxicity and the results of this study have been incorporated (see Attachment E, section V.B.)

9. Anti-backsliding and Antidegradation

a. Anti-backsliding

CWA sections 402(o)(2) and 303(d)(4) and 40 CFR 122.44(l) prohibit backsliding in NPDES permits. These anti-backsliding provisions require that effluent limitations in a reissued permit be as stringent as those in the previous permit, with some exceptions in which limitations may be relaxed. WQBEL calculations and compliance with anti-backsliding requirements are discussed for each pollutant with a WQBEL in Fact Sheet section IV.C.4.c.

Because the RPA showed no Reasonable Potential for nickel, thallium, and total PCBs, the limitations in the previous permit are not retained in this Order. State Water Board Order WQ 2001-16 found, "Anti-backsliding does not necessarily dictate that a pollutant that was limited in a prior permit must have a limit in a later permit, even though the pollutant has never been detected and its discharge does not have the Reasonable Potential to cause or contribute to a water quality standards violation." The logic of State Water Board Order WQ 2001-16 also applies to situations where a pollutant is detected, but no longer triggers reasonable potential. The removal of limits for these pollutants is therefore consistent with State Water Board Order WQ 2001-16 and anti-backsliding requirements.

Technology-based limitations in this Order for Discharge Point 001 are higher (appear less stringent) than corresponding limitations in the previous permit. The method for deriving these limits is presented in the *Effluent Limitations Guidelines for the Petroleum Refining Point Source Category* (40 CFR 419) and is explained in Attachment F-1. The derivation of limits depends on the process configuration of the refinery, which, in turn, depends on the feedstock rate of each process. Based on information provided by the Discharger in its application for permit renewal, during the term of the previous permit, feedstock rates for certain refinery processes increased, resulting in different "process configuration values" used in the derivation of effluent limitations and higher effluent limitations. Such a change in effluent limitations is consistent with CWA section 402(o)(2)(A), which allows a reissued permit to include less stringent limitations when a material and substantial alteration to the permitted facility has occurred after the previous limitations became effective. In these circumstances, technology-based effluent

limitations are still consistent with applicable requirements of 40 CFR 419; however, material changes in refinery processes have resulted in different factors to be considered when effluent limitations are derived.

b. Antidegradation

Antidegradation policies require that existing water quality be maintained unless degradation is justified based on specific findings. The permitted discharge is consistent with antidegradation policies. This Order continues the level of discharge authorized in the previous permit and thus there will be no degradation of water quality. This is because this Order does not provide for an increase in the permitted design flow or allow for a reduction in the level of treatment.

Production-Based Limits
This Order establishes increased technology-based mass loading limits for BOD, COD, TSS, oil & grease, phenolic compounds, sulfide, total chromium, and hexavalent chromium consistent with the ELGs. This is the result of increased feedstock rates to certain refinery processes that result in the derivation of increased effluent limitations consistent with the ELGs.

In 1990, the State Water Board adopted an administrative procedures update (APU 90-004) that specified guidance to the Regional Water Boards for implementing the State and federal antidegradation policies. The guidance states "… if the Regional Water Board has no reason to believe that existing water quality will be reduced due to the proposed action, no antidegradation analysis is required." The new mass loading limits for BOD, COD, TSS, oil & grease, phenolic compounds, sulfide, total chromium, and hexavalent chromium will not result in a significant reduction of water quality.

The total effluent flow rate is a function of production. No increase in production, and therefore in flow, is authorized. These requirements mean that the mass of BOD, COD, TSS, oil & grease, phenolic compounds, sulfide, total chromium, and hexavalent chromium discharged is unlikely to increase despite the increased mass loading limitations. The Discharger proposes no changes to its treatment process, and no decrease in treatment is authorized. Furthermore, it is impossible for the Discharger to manipulate its treatment processes to adjust effluent levels of these pollutants independently of others. To maintain compliance with other effluent limits, the Discharger will have to at least maintain its existing performance.

The technology-based mass limitations are consistent with applicable statutes and regulations. They are derived from the ELGs for cracking refineries based on *Effluent Limitations Guidelines for the Petroleum Refining Point Source Category* (40 CFR 419) and represent Best Practicable Control Technology (BPT) and Best Conventional Pollutant Control Technology (BCT). They therefore represent the best practicable treatment or control available. Suisun Bay meets water quality standards for all pollutants subject to the technology-based mass limits in this Order, and no increase in pollutant loading is likely. The new limits are therefore consistent with federal and State antidegradation policies.

Because antidegradation requirements are met, there will be no lowering of water quality; therefore, further analysis is unnecessary. Findings authorizing degradation are also unnecessary.

D. Land Discharge Specifications

Not Applicable.

E. Reclamation Specifications

This Order does not regulate the reclamation and use of treated wastewater, which is subject to the Department of Public Health regulations at Title 22 of the California Code of Regulations, Division 4, Chapter 3 (Water Recycling Criteria).

V. RATIONALE FOR RECEIVING WATER LIMITATIONS

Receiving water limitations are retained from the previous permit and reflect applicable water quality standards from Basin Plan Chapter 3.

VI. RATIONALE FOR MONITORING AND REPORTING REQUIREMENTS

The principal purposes of a monitoring program by a discharger are to:

- Document compliance with waste discharge requirements and prohibitions established by the Regional Water Board,
- Facilitate self-policing in the prevention and abatement of pollution arising from waste discharge, and
- Develop or assist in the development of limitations, discharge prohibitions, national standards of performance, pretreatment and toxicity standards, and other standards, and prepare water and wastewater quality inventories.

The MRP is a standard requirement in almost all NPDES permits issued by the Regional Water Board, including this Order. It contains definitions of terms, specifies general sampling and analytical protocols, and sets out requirements for reporting spills, violations, and routine monitoring data in accordance with NPDES regulations, the CWC, and Regional Water Board policies. The MRP also defines the sampling stations and frequency, the pollutants to be monitored, and additional reporting requirements. Pollutants to be monitored include all parameters for which effluent limitations are specified. Monitoring for additional constituents, for which no effluent limitations are established, is also required to provide data for future completion of RPAs.

A. Influent Monitoring

Monitoring of influent to the wastewater treatment plant is not required.

B. Effluent Monitoring

The MRP retains most effluent monitoring requirements from the previous permit. Important changes in effluent monitoring requirements are summarized below.

Discharge Point 001

- Routine effluent monitoring for specific priority toxic pollutants is required only for those pollutants with effluent limitations. Priority toxic pollutants must be monitored two times per year and in accordance with the Regional Standard Provisions (Attachment G).

Storm Water Discharge Points

- The monitoring frequency at some storm water outfalls (Discharge Points 003 and 004) remains at each occurrence. This is because storm water routed to these outfalls is more likely to contain contaminants. Additionally, discharges that occur at outfalls 003 and 004 are controlled via pond systems. For uncontrolled discharges (sheet flow) from Discharge Points 005 and 006, this Order continues to require a monitoring frequency of twice during each wet season.

- If effluent limitations for BOD, TSS, COD, chromium, and phenolic compounds become effective for discharges of storm water in accordance with section IV.B.2 of this Order, the MRP establishes a monitoring schedule for these pollutants.

C. Whole Effluent Toxicity Testing Requirements

1. **Acute Toxicity.** Weekly 96-hour bioassay testing is required to demonstrate compliance with the effluent limitation for acute toxicity.

2. **Chronic Toxicity.** Chronic whole effluent toxicity testing is required quarterly in order to demonstrate compliance with effluent limitations for chronic toxicity.

D. Receiving Water Monitoring

On April 15, 1992, the Regional Water Board adopted Resolution No. 92-043 directing the Executive Officer to implement the San Francisco Bay Regional Monitoring Program for Trace Substances (RMP). Subsequent to a public hearing and various meetings, Regional Water Board staff requested major permit holders in this Region, under authority of CWC section 13267, to report on the water quality of the estuary. These permit holders responded to this request by participating in a collaborative effort, through the San Francisco Estuary Institute. This effort has come to be known as the RMP. This Order specifies that the Discharger shall continue to participate in the RMP, which involves collection of data on pollutants and toxicity in water, sediment and biota of the estuary.

VII. RATIONALE FOR PROVISIONS

A. Standard Provisions (Provision VI.A)

Federal standard provisions, which apply to all NPDES discharges and must be included in every NPDES permit in accordance with 40 CFR 122.41and 122.42, are provided in Attachment D of this Order. Regional standard provisions are also included as Attachment G.

B. Monitoring and Reporting Requirements (Provision VI.B)

The Discharger is required to conduct monitoring to evaluate compliance with permit conditions. Monitoring requirements are in the MRP (Attachment E) and Regional Standard Provisions (Attachment G**)**. This provision requires compliance with these documents and is based on 40 CFR 122.63 and CWC section 13267. The Regional Standard Provisions are standard requirements in almost all NPDES permits issued by the Regional Water Board, including this Order. They contain definitions of terms, specify general sampling and analytical protocols, and set out requirements for reporting of spills, violations, and routine monitoring data in accordance with NPDES regulations, the CWC, and Regional Water Board policies. The MRP contains a sampling program specific for the facility. It defines the sampling stations and frequency, the pollutants to be monitored, and additional reporting requirements. Pollutants to be monitored include all parameters for which effluent limitations are specified. Monitoring for additional constituents, for which no effluent limitations are established, is also required to provide data for future RPAs.

C. Special Provisions (Provision VI.C)

1. Reopener Provisions

These provisions are based on 40 CFR 123 and allow future modification of this Order and its effluent limitations as necessary.

2. Special Studies and Additional Monitoring

a. Effluent Characterization Study. This Order does not include effluent limitations for the selected constituents addressed in the Regional Standard Provisions (Attachment G) that do not demonstrate Reasonable Potential, but this provision requires the Discharger to continue monitoring for these pollutants as described in the Regional Standard Provisions and as specified in the MRP. If concentrations of these constituents increase significantly, the Discharger is required to investigate the sources of the increases and establish remedial measures, if the increases result in reasonable potential to cause or contribute to an excursion above water quality standards. This provision is based on the Basin Plan, the SIP, and CWC 13267.

b. Ambient Background Receiving Water Study. This provision is based on the Basin Plan, the SIP, CWC 13267 and the Regional Standard Provisions (Attachment G). As indicated in this Order, this requirement may be met by participating in the collaborative BACWA study.

c. Receiving Waters and Effluent Selenium Characterization Study. This Order requires the Dischargers to characterize: (a) the concentrations and speciation of selenium in effluent

and receiving water, (b) the variability of selenium in the discharge, (c) the potential for uptake and conversion of selenium to more bioavailable forms, (d) mixing and dilution in the receiving waters, and (e) the ability to comply with any more-stringent selenium criteria that may become effective in the foreseeable future. These requirements are reasonable and warranted because the Dischargers discharge selenium into San Pablo Bay, Suisun Bay, and Carquinez Strait with their refinery wastewaters. Based on the results of the studies, the Regional Water Board will be able to evaluate better how the Dischargers contribute to the selenium impairment of San Francisco Bay. The Regional Water Board may use the data to evaluate dilution credits, characterize selenium bioaccumulation potential and ecological risk, and evaluate receiving water quality with respect to selenium. The Regional Water Board may also use the data to determine whether receiving water quality correlates with seasonal or other environmental factors. California Water Code section 13267 authorizes the Regional Water Board to require these studies.

3. Best Management Practices and Pollution Minimization Program

This provision is based on Basin Plan section 4.12.2 and SIP section 2.4.5.

4. Other Special Provisions

a. Cyanide Action Plan

This provision is based on Basin Plan Table 3-3A, which contains site-specific objectives for cyanide for San Francisco Bay. The Basin Plan requires a cyanide action plan to ensure compliance with State and federal antidegradation policies when cyanide limits are based on the site-specific objectives.

b. Copper Action Plan

This Order requires the Discharger to implement monitoring and surveillance, pretreatment, source control, and pollution prevention for copper in accordance with the Basin Plan. Basin Plan Table 3-3A contains site-specific objectives for copper in all segments of San Francisco Bay. The Basin Plan also requires implementation of an action plan to ensure no degradation of water quality.

c. Storm Water Pollution Prevention Plan and Annual Report

This provision is based on Basin Plan section 4.8, statewide storm water requirements for industrial facilities, and applicable USEPA regulations. It is retained from the previous permit.

VIII. PUBLIC PARTICIPATION

The Regional Water Board is considering the issuance of WDRs that will serve as a NPDES permit for the Tesoro Golden Eagle Refinery. As a step in the WDRs adoption process, the Regional Water Board has developed tentative WDRs. The Regional Water Board encourages public participation in the WDR adoption process.

A. Notification of Interested Parties

The Regional Water Board has notified the Discharger and interested agencies and persons of its intent to prescribe WDRs for the discharge and has provided them with an opportunity to submit their written comments and recommendations. Notification was provided by publication in the Martinez News Gazette on April 8, 2010.

B. Written Comments

Staff determinations are tentative. Interested persons are invited to submit written comments concerning these tentative WDRs. Comments must be submitted either in person or by mail to the Executive Office at the Regional Water Board at the address on the cover page of this Order, to the attention of Robert Schlipf.

To receive a full response from Regional Water Board staff and to be considered by the Regional Water Board, written comments should be received at the Regional Water Board offices by **5:00 p.m. on May 10, 2010.**

C. Public Hearing

The Regional Water Board will hold a public hearing on the tentative WDRs during its regular Board meeting on the following date and time and at the following location:

Date: **June 9, 2010**
Time: 9:00 am
Location: Elihu Harris State Office Building
1515 Clay Street, 1st Floor Auditorium
Oakland, CA 94612

Contact: Robert Schlipf**,** (510) 622-2478, email rschlipf@waterboards.ca.gov

Interested persons are invited to attend. At the public hearing, the Regional Water Board will hear testimony, if any, pertinent to the discharge, WDRs, and permit. Oral testimony will be heard; however, for accuracy of the record, important testimony should be in writing.

Please be aware that dates and venues may change. The Regional Water Board's Web address is http://www.waterboards.ca.gov/sanfranciscobay where one can access the current agenda for changes in dates and locations.

D. Waste Discharge Requirements Petitions

Any aggrieved person may petition the State Water Board to review the decision of the Regional Water Board regarding the WDRs. The petition must be submitted within 30 days of the Regional Water Board's action to the following address:

State Water Resources Control Board
Office of Chief Counsel
P.O. Box 100, 1001 I Street
Sacramento, CA 95812-0100

E. Information and Copying

The Report of Waste Discharge, related documents, tentative effluent limitations and special provisions, comments received, and other information are on file and may be inspected at the address above at any time between 8:45 a.m. and 5:00 p.m., Monday through Friday. Copying of documents may be arranged by calling 510-622-2300.

F. Register of Interested Persons

Any person interested in being placed on the mailing list for information regarding the WDRs and NPDES permit should contact the Regional Water Board, reference this facility, and provide a name, address, and phone number.

G. Additional Information

Requests for additional information or questions regarding this order should be directed to Robert Schlipf at 510-622-2478 (e-mail at rschlipf@waterboards.ca.gov).

ATTACHMENT F-1

Derivation of Technology-Based Effluent Limitations
Tesoro Golden Eagle Refinery

References

1. 40 CFR 419 Subpart B – Cracking Subcategory, *Effluent Limitation Guidelines and New Source Performance Standards for the Petroleum Refining Point Source Category* (2006)

2. *Development Document for Effluent Limitations Guidelines and New Source Performance Standards for the Petroleum Refining Point Source Category,* EPA/4401-82/014 (1982)

3. *Guide for the Application of Effluent Limitations Guidelines for the Petroleum Refining Industry,* USEPA Office of Water Regulations and Standards (1985)

4. Tesoro Golden Eagle Refinery, NPDES Application for Permit Renewal, NPDES Permit No. CA0005550 (March 1, 2010)

5. Refinery Production Data from NPDES Application for Permit Renewal, Attachment 2C-IIIC – Basis for Reporting Production Rates

Applicable Definitions

Process Waste Water means any water, which, during manufacturing or processing, comes into direct contact with or results from the production or use of any raw material, intermediate product, finished product, byproduct, or waste product. [40 CFR 401.11(q)]

Runoff means the flow of storm water resulting from precipitation coming into contact with petroleum refinery property. [40 CFR 419.11(b)]

Contaminated Runoff means runoff that comes into contact with any raw material, intermediate product, finished product, by-product or waste product located on petroleum refinery property. [40 CFR 419.11(g)]

Background

Effluent Limitations Guidelines (ELGs) for the Cracking Subcategory of the Petroleum Refining Point Source Category at 40 CFR 419 Subpart B are based, in part, on a discharger's production rate. The Discharger's current maximum production rate is 159,800 barrels per day (bbls/d).

Process Wastewaters. The ELGs include limitations for process wastewaters based on best practicable control technology currently available (BPT), best available technology economically achievable (BAT), and best conventional pollutant control technology (BCT). Specific BPT, BAT, and BCT effluent limitations that apply to the Discharger must be derived using methods described by the ELGs and take into account such factors

as production rate, as well as refinery processes and configuration. The most stringent of BPT, BAT, and BCT limitations apply.

For derivation of BPT, BAT, and BCT limitations for process wastewaters, size factors and process factors are determined as follows.

Size Factor. At a crude processing rate of 159,800 bbls/d, the appropriate size factors, pursuant to the ELGs at 40 CFR 419.22(b)(1) for BPT, at 40 CFR 419.23(b)(1) for BAT, and at 40 CFR 419.24(b)(1) for BCT, for derivation of technology-based effluent limitations is 1.41.

Process Factor. The process configuration for each process is determined by summing the process feedstock rates for each crude, cracking and coking, lube, and asphalt process at the refinery. Each individual feedstock rate is multiplied by the capacity relative to the throughput, and a weight factor specific for each process, to derive a "process configuration," which in turn is used to determine a "process factor" in accordance with the ELGs at 40 CFR 419.22(b) (2) for BPT, at 40 CFR 419.23(b)(2) for BAT, and at 40 CFR 419.24(b)(2) for BCT.

Processes considered in deriving the process factors are those processes within the crude and cracking and coking categories as reported by the Discharger, which correspond to the process groups listed within the *Guide for the Application of Effluent Limitations Guidelines for the Petroleum Refining Industry* (page 19). The Discharger does not include lube processes, so this process group is not considered in determining process factors.

Derivation of the process configuration for a production rate of 159,800 bbls/d is shown in the following table:

Table F-1A. Process Configurations

Production at 159,800 bbls/day				
Process	**Process Feedstock Rate [A]**	**Process/ Feedstock Ratio**	**Weight Factor**	**Process Configuration**
Crude				
Atm. Dist.	159.8	1.0		
Vac. Dist.	103.5	0.651		
Desalt.	156.9	0.982		
Total	420.2	2.633	1	2.63
Cracking				
Catalytic Cracking	68.9	0.431		
Hydrocracking	31.2	0.195		
Hydrotreating	143.7	0.899		
Coking	44.6	0.281		
Total	288.4	1.806	6	10.84
Lube	---	---	13	---
Total Refinery Configuration at 159,800 bbls/day				**13.47**

In accordance with 40 CFR 419.22(b)(2) for BPT, 40 CFR 419.232(b)(2) for BAT, 40 CFR 419.22(b)(2) for BCT, the process factor is 1.89

To determine BAT limitations for total and hexavalent chromium and phenolic compounds in process wastewaters, the ELGs require consideration of effluent factors and refinery processes. BAT effluent factors are presented at 40 CFR 419.23(c)(1); the refinery processes considered are the crude, cracking and coking, and reforming and alkylation processes, which correspond to those identified within the *Guide for the Application of Effluent Limitations Guidelines for the Petroleum Refining Industry* (page 20).

Contaminated Runoff. The ELGs establish BPT, BAT, and BCT limitations for contaminated runoff, which apply to all storm water discharges, except storm water treated and discharged with process wastewaters through Discharge Point 001. ELGs establish effluent limitations for oil and grease and total organic carbon (TOC), and then, if limitations for oil and grease or TOC are exceeded, additional limitations for BOD, COD, TSS, phenolic compounds, pH, and hexavalent and total chromium, found at 40 CFR 419.22(e)(2) and 419.23(f)(2), become effective.

In general, BPT limitations are the most comprehensive and stringent of all applicable technology-based limitations for contaminated runoff and, therefore, are incorporated into this Order as additional effluent limitations for discharges of contaminated runoff where oil and grease or TOC limits are exceeded. The following table summarizes the applicable technology-based effluent limitations, established by the ELGs, for contaminated runoff.

Table F-1B. Contaminated Runoff Technology-Based Limitations

Pollutant	Effluent Limitation [A]	
	Max Daily (mg/L)	30-day Average [B] (mg/L)
Oil and Grease	15 mg/L	---
TOC	110 mg/L	---
If either limitation for oil and grease or TOC, above, is exceeded, then the following limitations shall become effective		
BOD_5	48	26
TSS	33	21
COD	360	180
Oil and Grease	15	8.0
Phenolic Compounds (4AAP)	0.35	0.17
Total Chromium	0.60	0.21
Hexavalent Chromium	0.062	0.028
pH	6.0 – 9.0	

[A] All effluent limitations reflect BPT requirements from 40 CFR 419 Subpart B, except limitations for total chromium, which reflect BAT requirements.

[B] Average concentration over 30 consecutive days.

The Order establishes effluent limitations for oil and grease and TOC for all discharge points where contaminated runoff is discharged. Effluent limitations for BOD, TSS, COD, phenolics, and chromium will become effective immediately upon an exceedance of oil and grease or TOC for the outfall where the exceedance occurred. The effluent limit for pH listed in the table above is not imposed by this permit. The previous permit established a pH limit of 6.5 to 8.5, consistent with Basin Plan Table 4-2 for shallow-water discharges. This limit is retained by this Order to satisfy anti-backsliding requirements.

Determination of Process Wastewater Effluent Limitations

BPT. The following table shows the derivation of process wastewater BPT limitations at a production rate of 159,800 bbls/day.

Table F-1C. BPT Limitations for Process Wastewaters

	Preliminary Effluent Limitation Factor [A]		Size Factor	Process Factor	Feed Stock Rate	Effluent Limitation [B]	
	Max Daily	Avg Monthly				Max Daily	Avg Monthly
Production at 159,800 bbls/d							
BOD_5	9.9	5.5	1.41	1.89	159.8	4216	2342
TSS	6.9	4.4	1.41	1.89	159.8	2938	1874
COD	74.0	38.4	1.41	1.89	159.8	31513	16353
Oil & Grease	3.0	1.6	1.41	1.89	159.8	1278	681
Phenolics (4AAP)	0.074	0.036	1.41	1.89	159.8	32	15
Ammonia (as N)	6.6	3.0	1.41	1.89	159.8	2811	1278
Sulfide	0.065	0.029	1.41	1.89	159.8	28	12
Total Chromium	0.15	0.088	1.41	1.89	159.8	64	37
Hexavalent Chromium	0.012	0.0056	1.41	1.89	159.8	5.1	2.4

[A] From 40 CFR 419.22(a) (pounds per 1000 bbls of feedstock)
[B] Pounds per day (lbs/d)

BAT. The following table shows the derivation of BAT limitations for process wastewaters at a production rate of 159,800 bbls/d.

Table F-1D. Process Wastewater BAT Limitations

	Preliminary Effluent Limitation Factor [A]		Size Factor	Process Factor	Feed Stock Rate	Effluent Limitation [B]	
	Max Daily	Avg Monthly				Max Daily	Avg Monthly
Production at 159,800 bbls/d							
COD	74.0	38.4	1.41	1.89	159.8	31513	16353
Ammonia (as N)	6.6	3.0	1.41	1.89	159.8	2811	1278
Sulfide	0.065	0.029	1.41	1.89	159.8	28	12

[A] From 40 CFR 419.23(a) (pounds per 1,000 bbls feedstock)
[B] Pounds per day (lbs/d)

BAT limitations for total and hexavalent chromium and phenolic compounds are based on feedstock rates. Figures used in calculations for this Order are shown in the following table.

Table F-1E. Feedstock Rates for Determining BAT Limitations

Refinery Throughput	**159,800 bbls/d**
Crude	
Atmospheric Distillation	159.8
Vacuum Distillation	103.5
Desalter	156.9
Total	**420.2**
Cracking and Coking	
Catalytic Cracking	68.9
Coking	44.6
Hydrocracking	31.2
Hydrotreating	143.7
Total	**288.4**
Lube	
Total	**---**
Reforming and Alkylation [A]	
Reforming	32.7
Alkylation	12.6
Total	**45.3**

Based on the total feedstock rates shown above, derivation of BAT limitations for total and hexavalent chromium and phenolic compounds is shown in the following table.

Table F-1F. Process Wastewater BAT Limitations (Chromium and Phenolics)

Pollutant	**Preliminary Effluent Limitations Factor** [A]		**Feedstock Rate**	**Effluent Limitations** [B]	
	Max Daily	**Avg Monthly**		**Max Daily**	**Avg Monthly**
Production at 159,800 bbls/d					
Phenolic Compounds					
Crude	0.013	0.0030	420.2	5.46	1.26
Cracking and Coking	0.147	0.036	288.4	42.4	10.38
Reforming and Alkylation	0.132	0.032	45.3	5.98	1.45
Limit (Sum)	**---**	**---**	**---**	**53.8**	**13.1**
Total Chromium					
Crude	0.011	0.004	420.2	4.62	1.68

Pollutant	Preliminary Effluent Limitations Factor [A]		Feedstock Rate	Effluent Limitations [B]	
	Max Daily	Avg Monthly		Max Daily	Avg Monthly
Production at 159,800 bbls/d					
Cracking and Coking	0.119	0.041	288.4	34.32	11.82
Reforming and Alkylation	0.107	0.037	45.3	4.85	1.68
Limit (Sum)	---	---	---	**43.8**	**15.2**
Hexavalent Chromium					
Crude	0.0007	0.0003	420.2	0.29	0.13
Cracking and Coking	0.0076	0.0034	288.4	2.19	0.98
Reforming and Alkylation	0.0069	0.0031	45.3	0.31	0.14
Limit (Sum)	---	---	---	**2.79**	**1.25**

[A] From 40 CFR 419.23(c), lbs per 1,000 barrels feedstock
[B] Pounds per day (lbs/d)

BCT. The following table shows the derivation of BCT limitations for process wastewaters at a production rate of 159,800 bbls/d.

Table F-1G. Process Wastewater BCT Limitations

Pollutant	Preliminary Effluent Limitations Factor [A]		Size Factor	Process Factor	Feed Stock Rate	Final Effluent Limitations [B]	
	Max Daily	Avg Monthly				Max Daily	Avg Monthly
Production at 159,800 bbls/d							
BOD_5	9.9	5.5	1.41	1.89	159.8	4216	2342
TSS	6.9	4.4	1.41	1.89	159.8	2938	1874
Oil & Grease	3.0	1.6	1.41	1.89	159.8	1278	681

[A] From 40 CFR 419.24(a), pounds per 1,000 barrels feedstock
[B] Pounds per day (lbs/d)

Most Stringent Technology-Based Process Wastewater Effluent Limitations

The following table presents the technology-based process wastewater effluent limitations that apply to the Discharger. The limitations are the most stringent of the BPT, BAT, and BCT limitations required by the ELGs and are expressed in units of lbs/day based on a production rate of 159,800 bbls/d.

Table F-1H. Summary of Technology-Based Process Wastewater Effluent Limitations

	Effluent Limitations [A, B]	
Pollutant	**Max Daily**	**Avg Monthly**
Production at 159,800 bbls/d		
BOD_5	4,200	2,300
TSS	2,900	1,900

	Effluent Limitations [A, B]	
COD	32,000	16,000
Oil & Grease	1,300	680
Phenolics (4AAP)	32	13 [C]
Ammonia (as N)	2,800	1,300
Sulfide	28	12
Total Cr	44 [C]	15 [C]
Hex Cr	2.8 [C]	1.3 [C]

[A] Units are lbs/day
[B] All technology based limitations for process wastewaters are based on BPT unless otherwise noted.
[C] Based on BAT

Determination of Effluent Limitations for Contaminated Runoff

If contaminated storm water discharges exceed the oil and grease limit (15 mg/L) or the total organic carbon limit (110 mg/L), additional concentration-based limitations for BOD_5, TSS, COD, phenolics, total chromium, hexavalent chromium, and pH become immediately effective. The effluent limitations for these pollutants are derived from the most stringent of the BCT, BAT, and BPT effluent concentration-based limitations provided in the ELGs. A table summarizing these additional effluent limitations is below.

Table F-1I. Additional Storm Water Effluent Limitations

Pollutant	Daily Maximum (mg/L)	30 Day Average (mg/L)
BOD_5	48	26
TSS	33	21
COD	360	180
Oil and Grease	15	8.0
Phenolic Compounds	0.35	0.17
Total Chromium	0.60	0.21
Hexavalent Chromium	0.062	0.028