Plant Summary

Facility	Circ. Wtr Flow (gpm)	CT Approach (°F)	Cold Wtr. Temp (°F)	Condenser Pressure " HgA	Cond. Temp. Rise °F	Cond. Area (ft^2)	Cond. Tube Side Design Press (psig)	Cond. Duty (Btu/hr)	Remarks
DCPP Once thru	862,000	n/a	56.5	3.5	≈18	618,150	25	7.599×10^9	
DCPP Upgraded	862,700	29.5	94.5	≈4.1	≈18	618,171	50	7.619×10^9	34 Cells, plume 55%
DCPP Upgraded	862,700	37	101.5	5	≈18	618,171	50	7.619×10^9	44 Cells, plume 5%
Vogtle 3&4	≈624,800	13.6	90.6	2.9	25.2	1,246,425	90	7.540×10^9	
Levy 1&2	531,000	6.1	89.1	--	≈25	----	---	7.626×10^9	Condenser rise calculated from condenser duty and circ. water flow rate
Turkey Point 6&7	≈660,000	7.1	91	2.9	24.3	1,236,000	---	7.629×10^9	Condenser duty is between 7.540×10^9 and 7.629×10^9 depending on the reference. Condenser backpressures same as AP1000
Indian Pt. Unit 1 Unit 2	840,000 840,000	---	---	2.05 2.04	≈17 ≈17	947,100 858,375	---	6.96×10^9 6.99×10^9	Condenser rise calculated from condenser duty and circ. water flow rate
AP1000	≈600,000	8-10	91	2.9	25.2		90	7.540×10^9	Condenser hot water temperature did not match

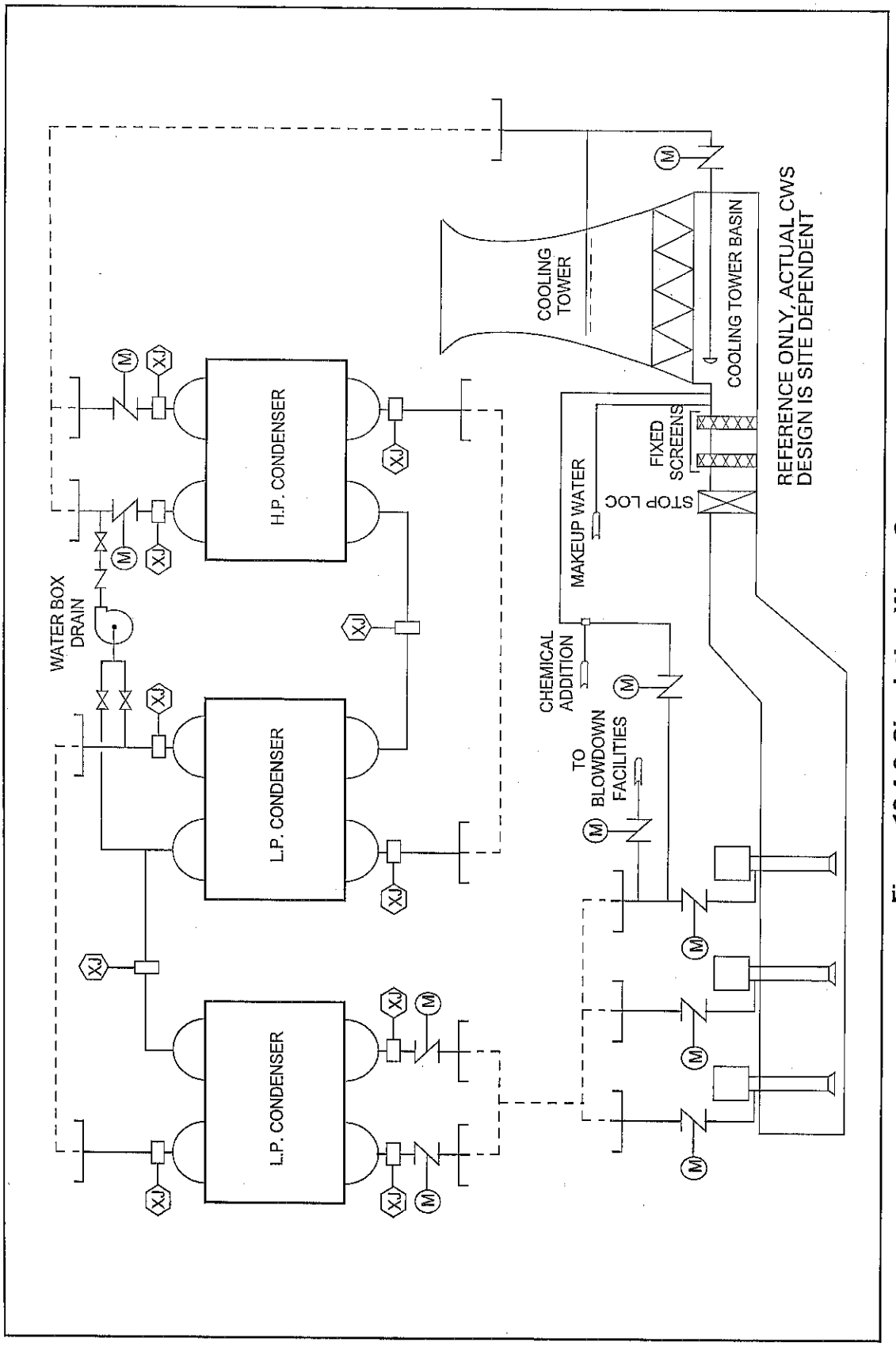

Figure 10.4-3 Circulating Water System